TX20000U-KLC

User & Technical Manual

R.V.R. ELETTRONICA

BROADCAST EQUIPMENT

CE

Rev.2.0

CE

EC Declaration of conformity

R.V.R. Elettronica S.p.A. declares that this transmitter is in conformity to the essential requirements and to other relevant regulations settled by the 1999/5/CE directive.

Validity of the EC declaration of conformity.

WARNING: the conformity of this product is not valid if the product is used in conditions not authorized by R.V.R. Elettronica as described in the user manual.
Examples of conditions in which the conformity is not valid (indicative list):
The connection between the exciter and the amplifier (i) indicated in the present document is not done properly;
The components used are different from those used and recommended by R.V.R. Elettronica S.p.A.;
The additional devices used are not suitable and/or are generating signals which are not suitable to those supported by the product;
The product is used in operative conditions different from the normal working conditions for which the product was designed (temperature, humidity, supply voltage, …);
Any modification on parts of the product without any prior authorization from R.V.R. Elettronica S.p.A..

Limitations for the use of the product in the EEC member countries.

This product is a radio transmitter for FM broadcasting .
It can work on operative frequencies which are not harmonized in the EEC member countries.
Whoever uses this product, should obtain the authorization from the spectrum local administrative authority before starting using it.
The user is responsible for the configuration of the working frequency, the output power, and for the other characteristics of the installation to which the transmitter described in the present documentation is part of, in order to respect the limitations described in the authorization received by the competent local authority.

Waste Electrical or Electronic Equipment (WEEE)

This symbol indicates that you should not discard waste electrical or electronic equipment (WEEE) in the trash. For proper disposal, contact your local recycling/reuse or hazardous waste center.

CAUTION

Do discard waste electrical or electronic equipment (WEEE) in the trash. For proper disposal, contact your local recycling/reuse or hazardous waste center.

Index

1. Introduction....1
2. Warranty....2
3. First Aid....4
3.1 Treatment of electrical shocks....4
3.1.1 If the victim is not responsive....4
3.1.2 If victim is responsive....5
3.2 Treatment of electrical Burns....5
3.2.1 Extensive burned and broken skin....5
3.2.2 Less severe burns....5
4. General Description....6
4.1 Composition....6
4.2 Technical specifications....9
5. Common control unit (CCU)....10
5.1 LCD Display....11
5.1.1 Overall status menù....12
5.1.2 Select menù....13
5.1.3 Control unit menù....13
5.1.4 Cooling menù....14
5.1.5 R.F. combiner menù....16
5.1.6 R.F. units menù....17
5.1.7 Alarms menù....18
5.1.8 Service menù....18
5.1.9 Settings menù....19
5.1.10 Exciters menù....20
5.1.11 Info menù....21
5.1.12 Release menù....21
5.1.13 Modem menù....22
5.2 Buttons, selector switches and LEDs....23
5.3 Phase ADJ....25
5.4 Alarms....28
5.5 Timing timer CCU....30
5.6 Rear panel....31
6. Wiring diagrams CCU....32
6.1 CCU board (SLCCUPJ5KM2)....33
6.2 CCU motherboard (SLCCU1PJ5KM2)....38
6.2.1 Settings....41
6.3 Main interface card (SL127IN1002)....42
6.3.1 Foldback voltage calibration....50
6.3.2 Calibration reading power....50
6.3.3 Main card connection....51
6.4 External con. interface card (SL127IN2001)....52
6.5 Interface exciter RF switch (SL127IN3001)....58
6.6 Exciter RF switch (SL127SW1002)....59
6.7 CPU board (CPUPJ2KMC)....61
6.8 Splitter board (SLSPLTHC3-01)....66
6.9 Phase shifter (SLPHSHHC3-02)....68
7. PJ5000U-KLC amplifier (alias Barracuda)....70
7.1 Description....70

7.2 Frontal panel....70
7.3 Rear panel....72
7.4 Software....73
7.4.1 Operating Menù (Fnc)....74
7.4.2 Power Menu (Pwr)....74
7.4.3 Power Amplifier Menu (P.A.)....75
7.4.4 Warning threshold setting menu (Set)....75
7.4.5 Alarm Menu (Alm)....76
7.4.6 Miscellaneous Menu (Mix)....77
7.4.7 Version Menu (Vrs)....78
7.5 Connector Description....79
7.5.1 Telemetry....79
7.5.2 RS-232....79
7.5.3 I2C....80
7.5.4 Common bus....80
7.5.5 Pumps interface....80
8. PJ5000U-KLC Wiring diagrams....81
8.1 Top view....81
8.2 Bottom view....82
8.3 PS section wiring diagrams....86
8.4 RF section wiring diagrams....92
8.5 Prot-F board (PROTPJ154)....94
8.5.1 Prot-F foldback calibration....100
8.6 Addon board (SL154IN2001)....101
8.7 Low-power driver board (SLDR0066R02V01C)....104
8.8 PFC (KPFC4280.LC)....107
8.8.1 PFC settings....117
8.9 Power supply (KPFCPSL4280.LC)....118
8.10 Surge Protection Board (SL046SR1002)....133
8.11 PS-RF interface board (SLINPSP2K07)....134
8.11.1 Board settings....139
8.12 Leds board (SL154LD1001)....140
8.13 Pass-throught board (SLFILPSPJ2K1)....141
8.14 CPU board (CPUPJ2KMC)....142
8.14.1 Set module address....146
8.15 Bias board (SLMTPRTPJ4K1)....147
8.15.1 Adjustments....155
8.16 8 way splitter (SLIN0388R01V01)....156
8.17 Bias distribution 8 PA RF (SLSP0387R01V01)....157
8.18 FWD & RFL Power Meter Board (SL042MT1501)....158
8.19 Out board (SLOP0338R2)....159
8.20 Amplifier Modules - Pallet mosfet (KFIN237H)....160
8.20.1 Datasheet MRF6VP11KH....163
8.20.2 Datasheet MRFE6VP61K25H....168
8.21 Harmonics Pick-Up (CSFI0350R1)....171
9. Replacement parts....172
9.1 Pallet mosfet replacement....172
10. Electrical and mechanical parts....177
10.1 General view....177
10.2 Electromechanical section....180

10.3 230/400 V wiring diagram....181
10.4 Low tension and signal wiring diagram....182
10.5 Relay interface board (CSRLYCPROTVJ)....193
10.6 Input terminals.... 184
10.7 Parallel interface (CSINTREMPJ5K)....185
10.7.1 Description....188
10.8 Plate connectors....193
10.9 Hybrid coupler 1 e 2 (COUP3DB5KT)....194
10.10 Hybrid coupler 3 (COUP3DB20KM)....195
10.11 Dummy load 1 e 2 (PF1KDI5KWH2O).... 197
10.12 Dummy load 3 - Big Dummy Load (EDL5000-FMLC).... 199
10.13 Vertical hydraulics....201
10.14 Carriage pumps (CARPOMP04)....202
10.15 External unit.... 203
10.16 GSM Telemetry....205
10.16.1 Installing and configuring the PC software.... 208
10.16.2 Dial-up via PC....220
10.16.3 Dial-up via mobile....222
10.16.4 Alarms....223
10.17 Derating of the systems....224
11. Installation....225
11.1 Transmitter connection....225
11.1.1 Datasheet coolant....235
11.2 First start in power.... 236
11.3 Ordinary maintenance....238

1. Introduction

This manual describes the TX20000U-KLC, a solid-state RF amplifier designed for frequency modulation sound broadcasting, manufactured by **R.V.R. Elettronica S.p.A.**.A control system for the exciters is built into the machine so that in order to have a system with redundant exciters, all that needs to be done is to include two exciters in the transmitter such as, for example, the PTX30LCD exciters made by R.V.R. Elettronica S.p.A.

This manual is written as a general guide for those having previous knowledge and experience with this kind of equipment, well conscious of the risks connected with the operation of electrical equipment.

It is not intended to contain a complete statement of all safety rules which should be observed by personnel in using this or other electronic equipment.

The installation, use and maintenance of this piece of equipment involve risks both for the personnel performing them and for the device itself, that shall be used only by trained personnel.

R.V.R. Elettronica S.p.A. doesn't assume responsibility for injury or damage resulting from improper procedures or practices by untrained/unqualified personnel in the handling of this unit.

Please observe all local codes and fire protection standards in the operations of this unit.

WARNING: always disconnect power before opening covers or removing any part of this unit. Use appropriate grounding procedures to short out capacitors and high voltage points before servicing.

WARNING: this device can irradiate radio frequency waves, and if it's not installed following the instructions contained in the manual and local regulations it could generate interferences in radio communications.

In a residential place this equipment can cause hash. In this case can be requested to user to take the necessary measures.

R.V.R. Elettronica S.p.A. reserves the right to modify the design and/or the technical specifications of the product and this manual without notice.

2. Warranty

Any product of R.V.R. Elettronica is covered by a 24 (twenty four) month warranty.

For components like tubes for power amplifiers, the original manufacturer's warranty applies. R.V.R. Elettronica S.p.A. extends to the original end-user purchaser all manufacturers warranties which are transferable and all claims are to be made directly to R.V.R. per indicated procedures.

Warranty shall not include:

1 You damn that are verified each other during the consignment of the machine to the R.V.R. for possible reparations;
2 Any unauthorized repair/modification;
3 Incidental/consequential damages as a result of any defect;
4 Nominal non-incidental defects
5 Re-shipment costs or insurance of the unit or replacement units/parts

Any damage to the goods must be reported to the carrier in writing on the shipment receipt.

Any discrepancy or damage discovered subsequent to delivery, shall be reported to **R.V.R. Elettronica** within 5 (five) days from delivery date.

To claim your rights under this warranty, you should follow this procedure:

1 Contact the dealer or distributor where you purchased the unit. Describe the problem and, so that a possible easy solution can be detected.

2 Dealers and Distributors are supplied with all the information about problems that may occur and usually they can repair the unit quicker than what the manufacturer could do. Very often installing errors are discovered by dealers.

3 If your dealer cannot help you, contact R.V.R. Elettronica and explain the problem. If it is decided to return the unit to the factory, R.V.R. Elettronica will mail you a regular authorization with all the necessary instructions to send back the goods.

4 When you receive the authorization, you can return the unit. Pack it carefully for the shipment, preferably using the original packing and seal the package perfectly. The customer always assumes the risks of loss (i.e., R.V.R. is never responsible for damage or loss), until the package reaches R.V.R. premises. For this reason, we suggest you to insure the goods for the whole value. Shipment must be effected C.I.F. (PREPAID) to the address specified by R.V.R.'s service manager on the authorization

5 DO NOT RETURN UNITS WITHOUT OUR AUTHORIZATION AS THEY WILL BE REFUSED

6 Be sure to enclose a written technical report where mention all the problems found and a copy of your original invoice establishing the starting date of the warranty.

Replacement and warranty parts may be ordered from the following address. Be sure to include the equipment model and serial number as well as part description and part number.

R.V.R. Elettronica SpA
Via del Fonditore, 2/2c
40138 BOLOGNA
ITALY
Tel. +39 051 6010506
email: info@rvr.it
Web: www.rvr.it

3. First Aid

The personnel employed in the installation, use and maintenance of the device, shall be familiar with theory and practice of first aid..

3.1 Treatment of electrical shocks

3.1.1 If the victim is not responsive

Follow the A-B-C's of basic life support

- Place victim flat on his back on a hard surface
- Open airway: lift up neck, push forehead back (Fig. 3-1).
- Clear out mouth if necessary and observe for breathing
- if not breathing, begin artificial breathing (Figure 3-2): tilt head, pinch nostrils, make airtight seal, four quick full breaths. Remember mouth to mouth resuscitation must be commenced as soon as possible

Figura 3-1

Figura 3-2

- Check carotid pulse (Fig 3-3); if pulse is absent, begin artificial circulation (Fig. 3-4) depressing sternum (Fig. 3-5)

Figura 3-3

Figura 3-4

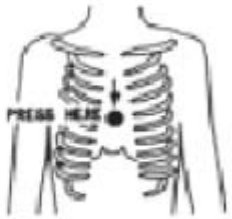

Figura 3-5

- In case of only one rescuer, 15 compressions alternated to two breaths.
- If there are two rescuers, the rhythm shall be of one brath each 5 compressions.
- Do not interrupt the rhythm of compressions when the second person is giving brath.
- Call for medical assistance as soon as possible.

3.1.2 If victim is responsive

- Keep them warm
- Keep them as quiet as possible
- Loosen their clothing (a reclining position is recommended)
- Call for medical help as soon as possible

3.2 Treatment of electrical Burns

3.2.1 Extensive burned and broken skin

- Cover area with clean sheet or cloth
- Do not break blisters, remove tissue, remove adhered particles of clothing, or apply any salve or ointment.
- Treat victim for shock as required.
- Arrange transportation to a hospital as quickly as possible.
- If arms or legs are affected keep them elevated

If medical help will not be available within an hour and the victim is conscious and not vomiting, give him a weak solution of salt and soda: 1 level teaspoonful of salt and 1/2 level teaspoonful of baking soda to each quart of water (neither hot or cold). Allow victim to sip slowly about 4 ounces (half a glass) over a period of 15 minutes. Discontinue fluid if vomiting occurs.

DO NOT give alcohol

3.2.2 Less severe burns

- Apply cool (not ice cold) compresses using the cleansed available cloth article.
- Do not break blisters, remove tissue, remove adhered particles of clothing, or apply salve or ointment.
- Apply clean dry dressing if necessary.
- Treat victim for shock as required.
- Arrange transportation to a hospital as quickly as possible
- If arms or legs are affected keep them elevated.

4. General Description

The TX20000U-KLC is a RF amplifier for frequency modulation sound broadcasting. It is a fully solid-state apparatus of modern design that uses MOSFET as active components in the FM amplifying modules, and for the cooling it uses of the coolant rather than forced air. This chapter briefly describes the machine's main features.

4.1 Composition

The TX20000U-KLC transmitter is made up of modules inserted in a 19" rack. The main apparatuses are:

- 4 RF amplifier modules at 5 kW nominal
- 1 Control unit called Common control unit (CCU)
- 3 Hybrid coupler -3dB
- 3 Dummy load
- 1 Cart pumps
- 1 External unit (radiator)

In configuration standard it comes supplied with Rack from 40 unit (you see design).

FRONTAL VIEW

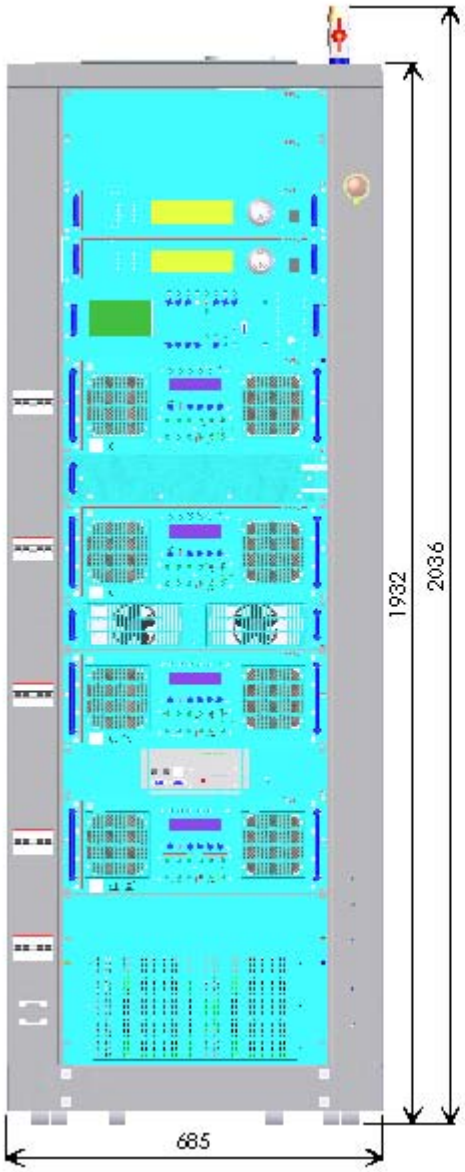

SIDE VIEW

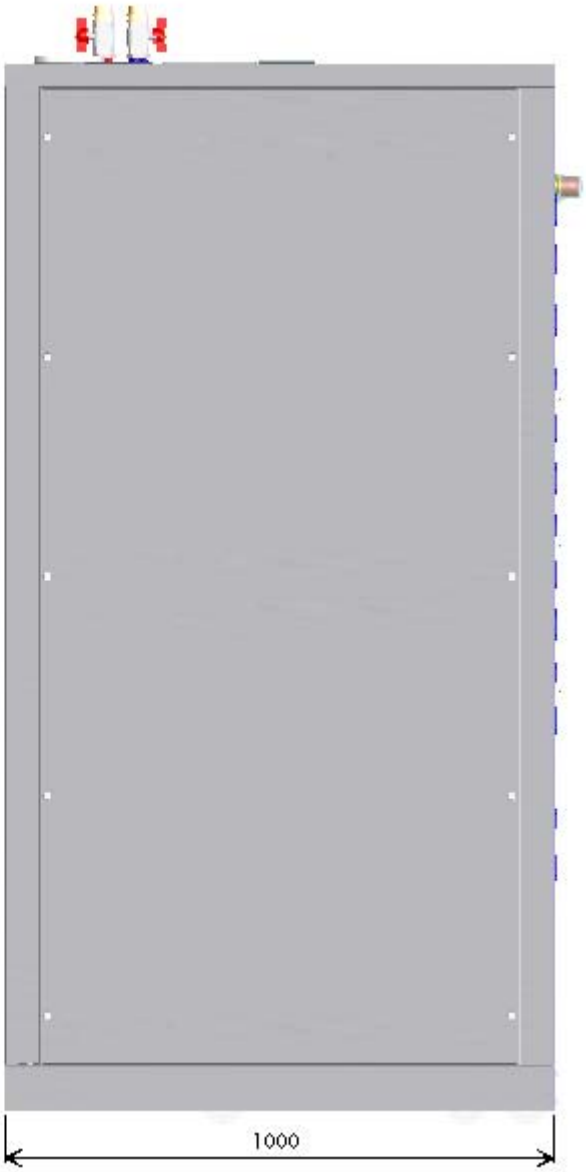

EXTERNAL UNIT

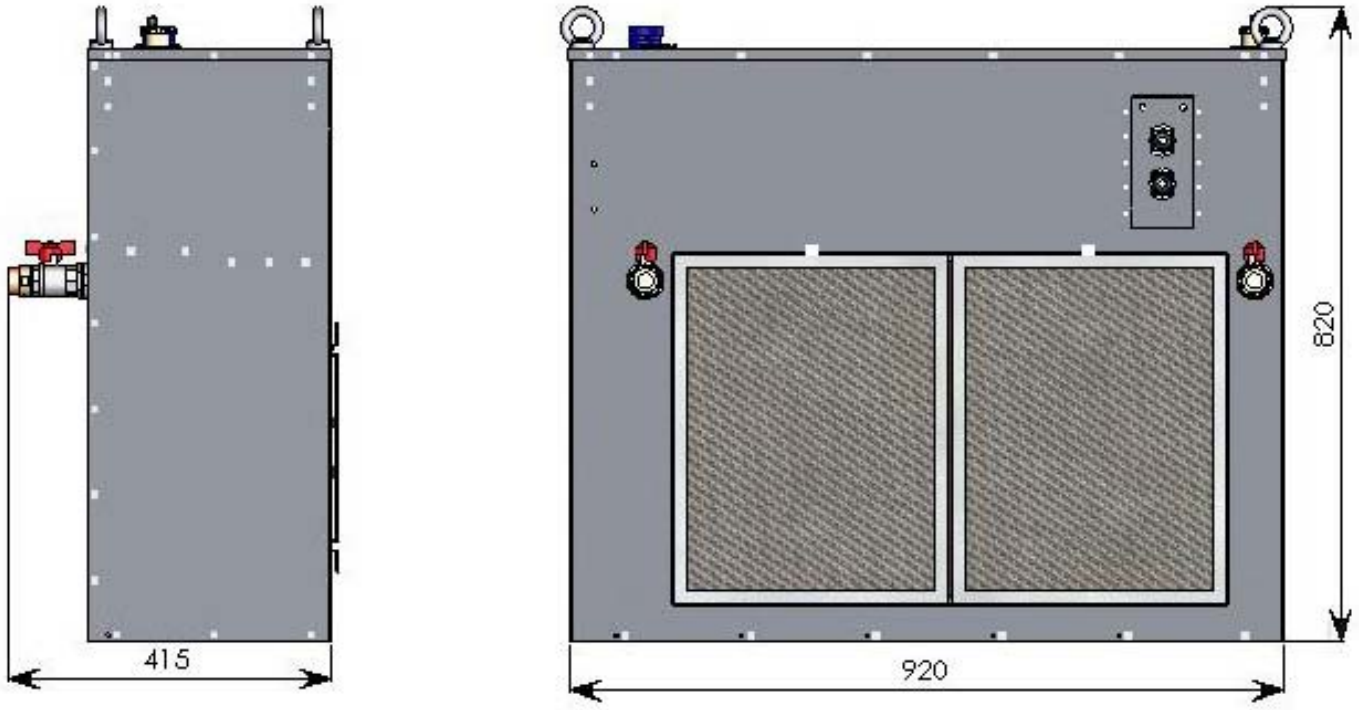

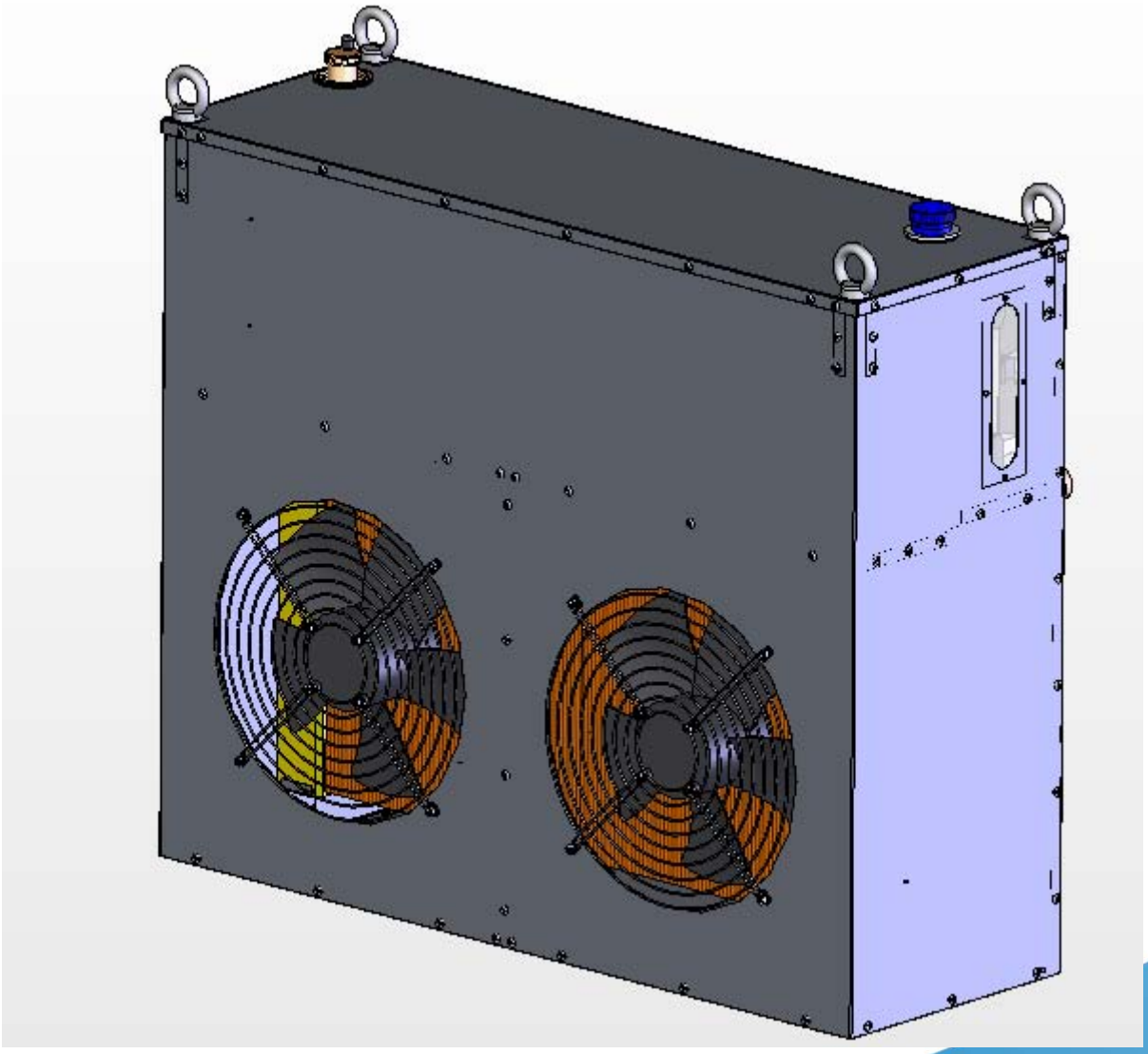

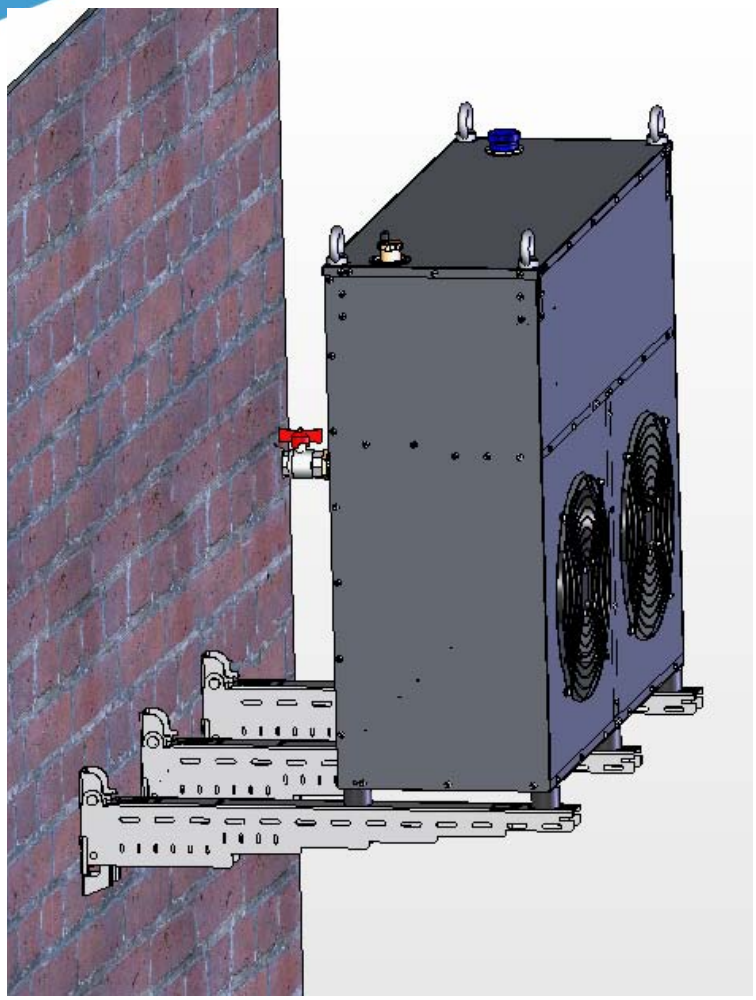

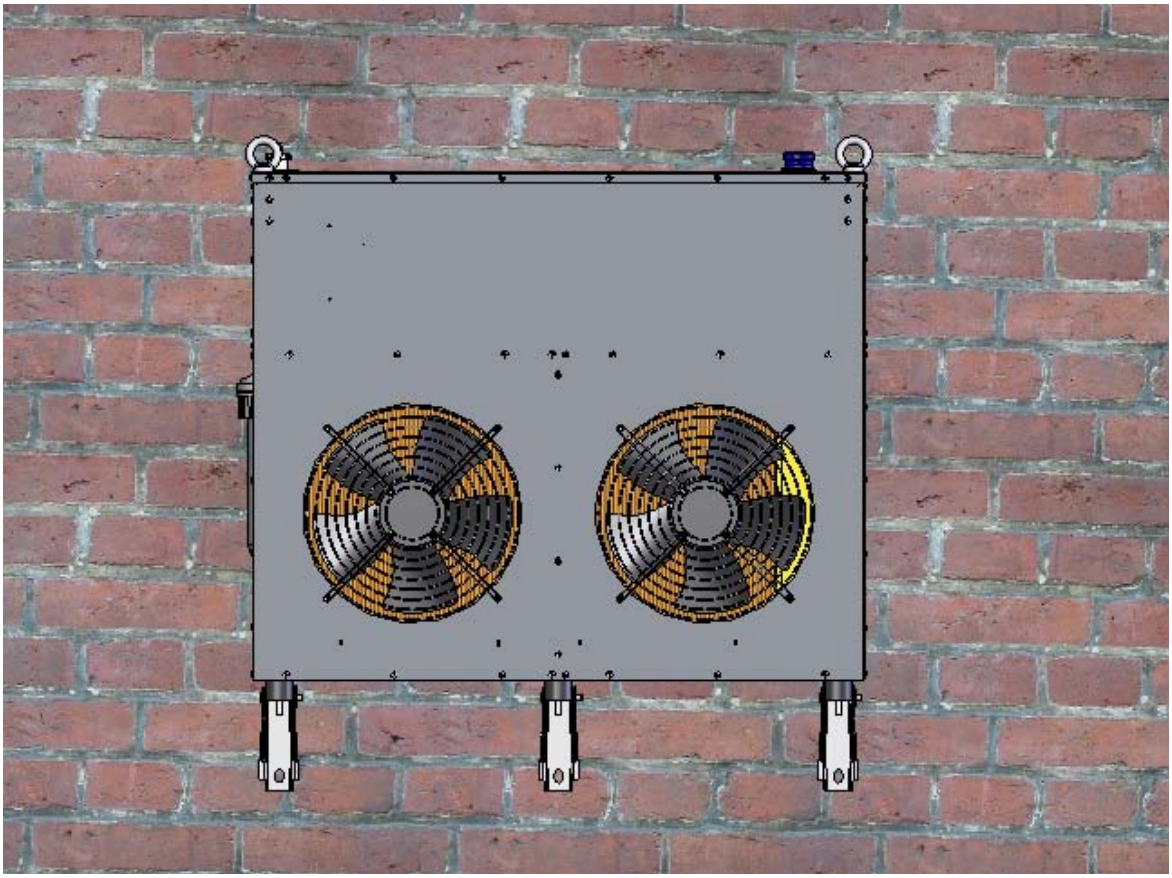

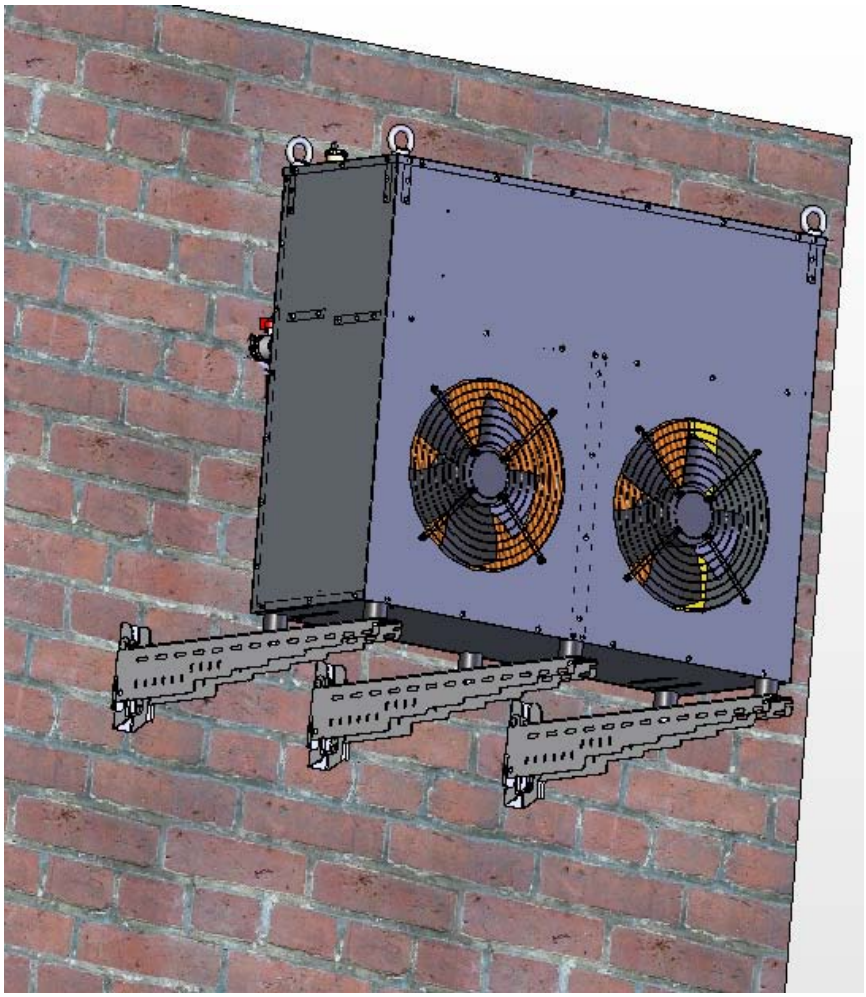

4.2 Technical specifications

Frequency range	87.5 - 108.0 MHz
Nominal RF power	20000 - 21000 W
Power supply voltage	220/380V Threephase, 3F+N
RF power output connector size	3-1/8” with EIA flange
Exciting power	Max. 30 W
Consumption	28.5 Kw
Power factor	0.98
Weight transmitter	570 Kg
Weight external unit	62 Kg (empty), 74 Kg (with coolant)

The transmitter it comes supplied with:

- 2 Flexible hydraulic tubes from 1” of length 6 meters for the connection of transmitter and external unit (except various demand for the customer).
- 2 Cables electrical workers of the same length of those hydraulic engineers for the supply and signals of alarm of the external unit.
- 42 liters of coolant in order to fill up the transmiter and the radiator (the apparatus comes supplied without coolant in the circuit).
- 3 brackets for the implantation to the wall of the external unit.

5. Common control unit (CCU)

The operator controls and checks the status of the TX20000U-KLC by means of the common contro unit (CCU).

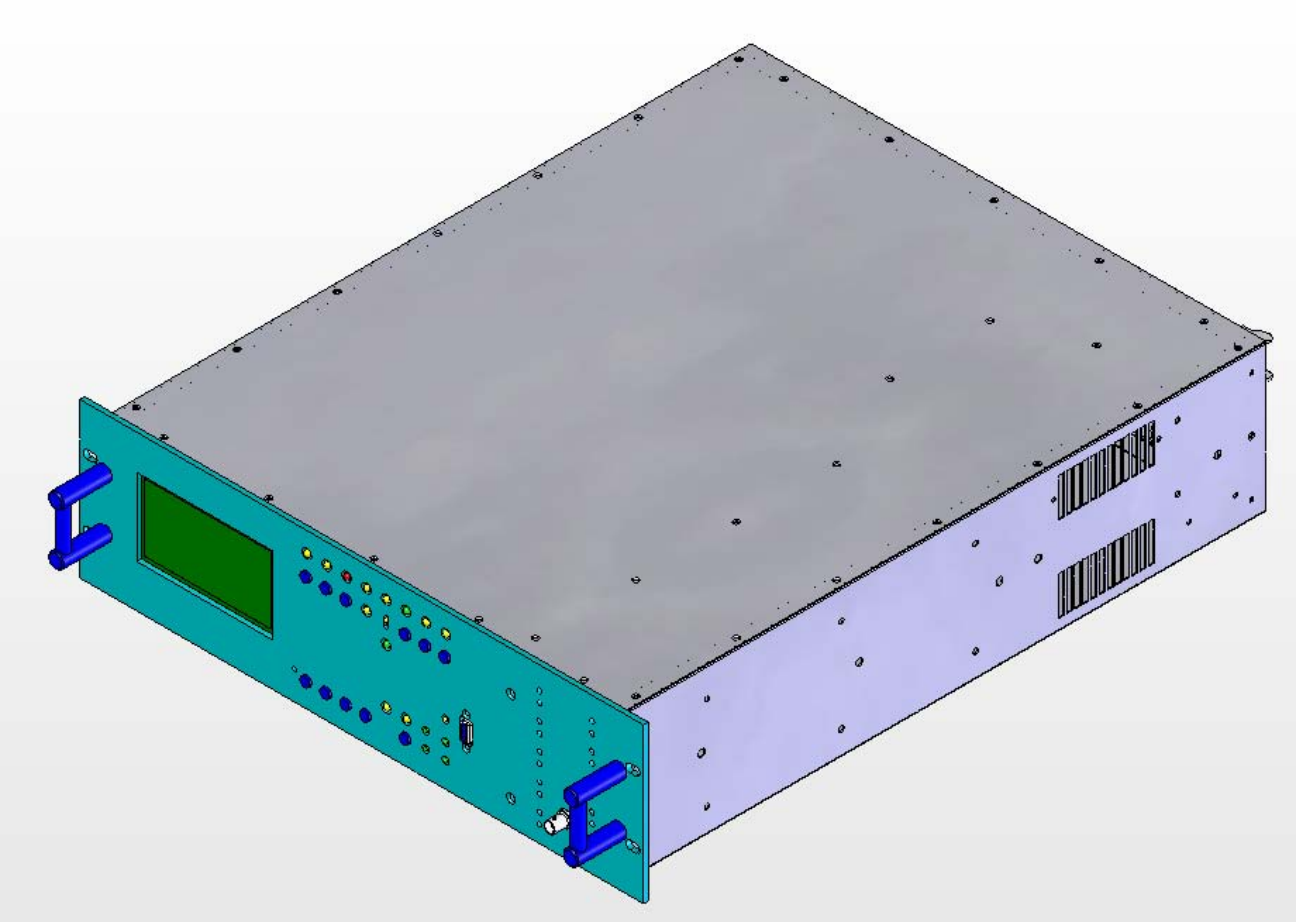

Three control groups are present on this unit:

• LCD and scroll buttons

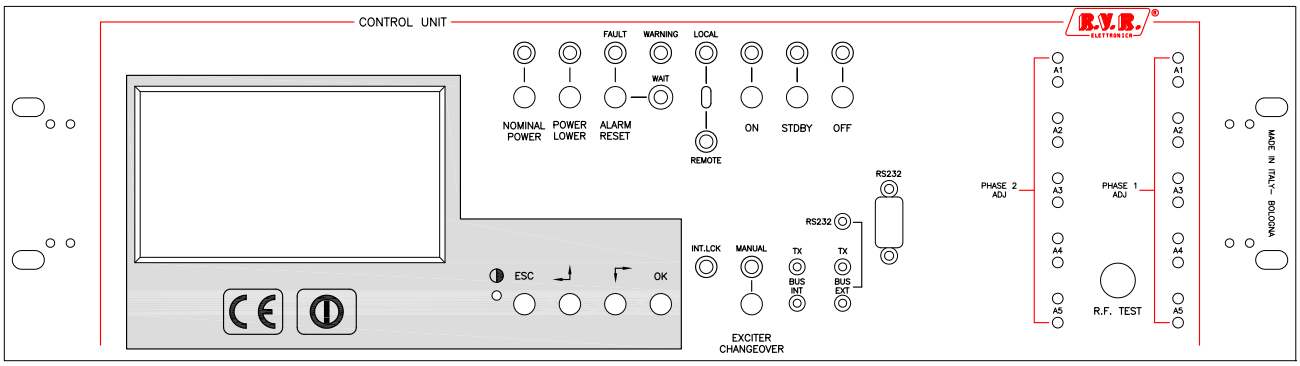

• Buttons, selector switches and LEDs

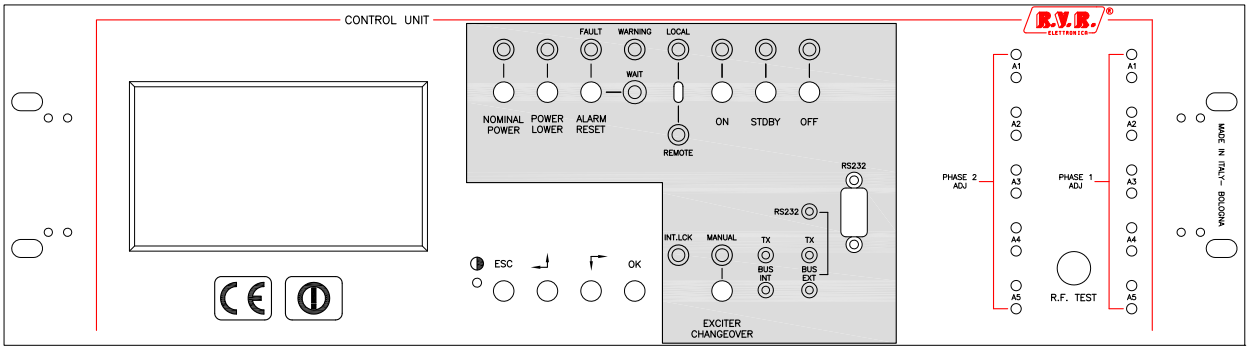

• Phase ADJ

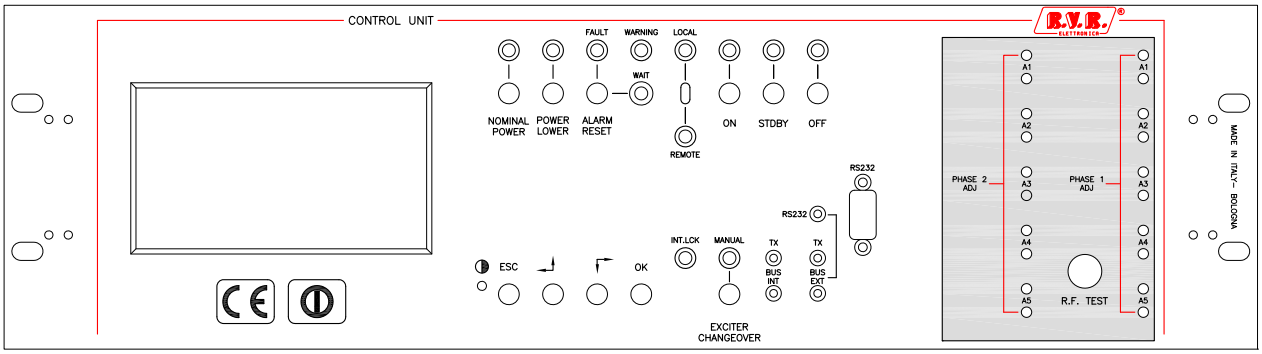

5.1 LCD Display

The operator uses the control software of the transmitter by means of a series of menus that are displayed on the LCD. Four specific keys are provided for scrolling through the menus, performing the settings and giving the commands:

Pulsante	Descrizione
OK	Click this button to access a sub-menu, to enter the editing mode or to confirm a modified value.
ESC	Click this button to exit from a menu or to cancel the modification of a value.
	Click this button to scroll inside a menu (to the right or down) or to reduce the value of a parameter being modified.
	Click this button to scroll inside a menu (to the left or up) or to increase the value of a parameter being modified.
	Trimmer for the regulation of the contrast of display the LCD

When the operator is not using the various buttons to navigate, the LCD displays the preset screenful that shows the “Output Power” that it indicates the forward and reflected output power (Figure 5-1).
As indicated on the preset screenful, push the ESC button to access at the “Overall Status” menù (Figure 5-2).

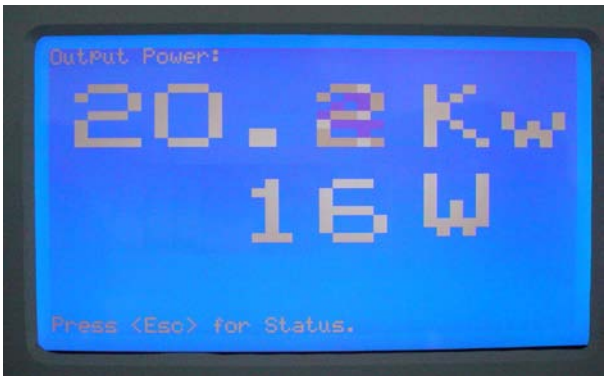

Figure 5-1

5.1.1 Overall Status Menù

This menu includes only indications, therefore the user cannot insert any input in its different lines.(Figure 5-2).

Menù Line	Description
Timer (when enabled)	Indication of the start and stop times of the automatic power reduction feature - see “Settings” menù
Control unit	Status of the control unit (Off or On) and indication of the exciter actually connected to the amplifier (Exct.1 or Exct.2)
Cooling	Status of the pumps board
R.F. Combiner	Status of the RF combiner
R.F. Unit - N	Status of the Rf power amplifier number N (1° from the top)
Hours	Timer counting the hours of operation of the transmitter. For example, this indication is useful in order to define when a maintenance operation can be made

By pressing the Esc key as indicated on the last line, you can shift to the exchange screen from which you can have access to the “Select” menù (Figure 5-3).

Note: All modules RF must be in REMOTE otherwise will come visualized “Time-out”. If from LOCAL it is passed REMOTE, will have to pass approximately 30/40 sec. before being able to visualize the relative state.

5.1.2 Select menù

This is the exchange menu from which you can select the different sub-menus that compose the software.(Figure 5-3).

In order to enter a sub-menu, select the correspondent line with the arrow buttons and press OK key.

Menu Line	Description
Control unit	General status of the TX20000U-KLC
Cooling	Status of the cooling
R.F. Combiner	Status of the RF combiner
R.F. Units	Status of the RF power amplifiers
Alarms	Summary of the occured alarms
Service	Service menu for the switching on/off of the modules
Settings	Setting of the parameters (i.e. Power levels)
Exciters	Parameters of the exciters (i.e. output power, on air exciter)
Info	Information concerning the configuration of the TX20000U-KLC
Release	Information concerning the hardware and software versions of the modules composing the unit
Modem	Settings related to the optional telemetry system

To return to the predefined menu press key ESC many times.

Figura 5-3

5.1.3 Control Unit menù

Informative menu on the inputs and the outputs of the CCU of the machine.(Figure 5-4).

Menu Line	Description
Ext Intl	Input status “external interlock” (JP4/4 parallel interface)
Aux Intl	Input status “auxiliary interlock” (JP4/5)
Exc1 A.Audio	Input status “audio alarm exciter 1” (JP4/8)
Exc2 A.Audio	Input status “audio alarm exciter 2” (JP4/9)
L.P. Timer	Input status of the modality of automatic reduction of the power

Reserve 2	Input status “Reserve 2” (JP8/3)
Reserve 3	Input status “Reserve 3” (JP8/4)
Reserve 4	Input status “Reserve 4” (JP8/5)
Relay Exc	Exciters exchange relay status (Off = exciter 1 on air)
Exc-1 Mute	Exciter 1 interlock status (Off = RF power enabled)
Exc-2 Mute	Exciter 2 interlock status (Off = RF power enabled)
Audio Alarm	Output Audio Alarm status (JP47/1)
Exc’s Mains	Exciters power supply status (On = power supply enabled)
Stand_by (In)	“Stand by” input line status
Stand_by (Out)	“Stand by” output line status from the control unit
Total Eff	Total efficiency of the machine

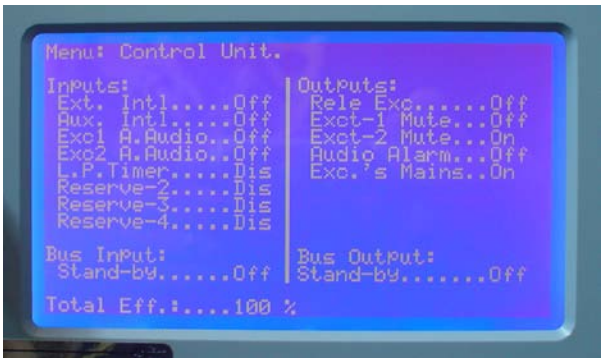

Figure 5-4

5.1.4 Menù Cooling

informative menu of cooling of the machine (Figure 5-5).

Menu Line	Description
Air	Temperature inside to the machine
Safety	Status of the safety arrest button. On indicates the functioning is enabled, Alr means the unit was arrested through the button
Mains	Status of the main voltage supply. Ok indicates the presence of all phases and that their sequence is corrected, Alr means that it must verify the presence of all phases,their sequence or the fuse of one or more phases, to protection of the threephase control *
C.B. Low	Indicates the state of 1° thermostat of the coolant
C.B. High	Indicates the state of 2° thermostat of the coolant (only in the transmitter TX15000U-KLC or higher)
C.B. Rack	Indicates the state of the thermostat of temperature inside to the machine
H2o Level Min	Indicates the level of the water in the tank of the external unit. Alr means that the water has reached the minimum level
H2o Level Low	Indicates the level of the water in the tank of the external unit. Alr means that the tank is empty and implies **the immediate shutdown of the machine**

Flux	Indicates if there is a corrected flow of the coolant
H2o Pressure	Indicates if the pressure of the coolant in the circuit is in the range of admitted values. Alr means that the pressure is excessive
Blower-1	It indicates the state of the fan of the external unit
Blower-2	It indicates the state of the 2° fan of the external unit (only in the transmitter TX15000U-KLC or higher)
Blower R	It indicates the state of the fan of aspiration positioned on the top of the machine
Pump-1	Indicates the state of the N°1 pump
Pump-2	Indicates the state of the N°2 pump

Change Pump <Ok>: pressing key OK it is possible manually switch the pump in function at the moment. The minimal time between an exchange and an other is of 120 sec.

The pump is exchanged automatically every time you switch off and subsequently re-switch the CCU. In case you never switch off the CCU, the pump is exchanged automatically every 10 days of normal operation.
The operation of pumps exchange is necessary for the regular functioning of the same.

In case of a fault on pump pressure, and then an interruption of the cooling flow, after 10 seconds is recorded by the machine which starts the operations of exchange pumps.

Note: the delay of 10 seconds is necessary to prevent the record of false positives as a momentary pressure drop due to air bubbles in the cooling system.

The machine will continue to exchange the pumps every two minutes, until the situation that caused the alarm is resolved.

After six minutes the equipment goes in a WAIT condition, and will be reported through the yellow LED on the front, in the meanwhile the machine will continue to exchange pumps every 2 minutes in order to resolve the alarm condition.

If the alarm PRESS intervene, the transmitter should be in conditions of FAULT (transmitter will not transmit more power) and this will be reported through the red LED on the front of the machine. Only the intervention of an operator or a reset by telemetry, can unlock the transmitter. If the problem remains, after 60 sec. return to FAULT.

Note: Please resolve as soon as possible the condition that brought the equipment to the alarm, this to restore the correct operation.

Note: Please resolve as soon as possible replacing the faulty pump.

* The threephase control and the relative fuses are found near the input terminals on the top of the machine.

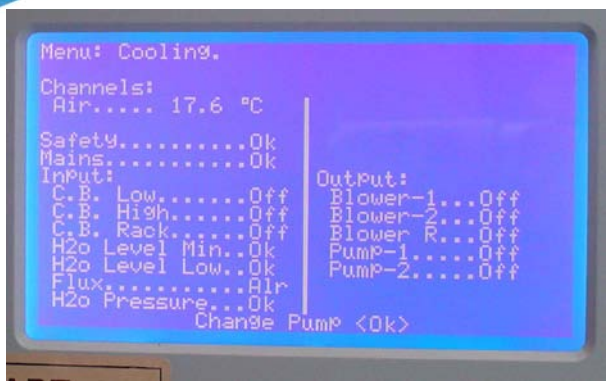

Figure 5-5

5.1.5 Menù R.F. Combiner

This menu contains the information related to the RF part of the complete transmitter. (Figure 5-6).

Menu Line	Description
Fwd	Overall emitted RF power of the transmitter
Rfl	Reflected RF power of the antenna
Fwd (External)	Forward power of an external transmitter (when configured for this function)
C.B. Kdj 1-10	Temperature sensor of the dummy load. Alr indicates an excessive temperature
C.B. Kdj-M	Temperature sensor of the dummy load (big load) Alr indicates an excessive temperature (only in the transmiter TX20000U-KLC)
Ext.Alarm	External alarm for future protections
S.W.R.	Standing Wave Ratio, calculated by the Control Unit on the basis of the measured forward and reflected power
Main Exc	Output power of the exciter currently on air (the one connected to the input of the RF modules)
Stby Exc	Output power of the exciter currently on the internal dummy load
Blower.Kdj	Status of the output for kdj fan (dummy load)
Blower.C	Status of the output for extraction air fan
PWG1 Fwd.P	Status of the output “PWG1”. See the Settings Menu
PWG2 Fwd.P	Status of the output “PWG2”. See the Settings Menu
PWG3 Rfl.P	Status of the output “PWG3”. See the Settings Menu
PWG4 Rfl.P	Status of the output “PWG4”. See the Settings Menu

In the angle low to right of the display the symbol is present this means that an ulterior relative page to this menu is available (Figure 5-7),that it is possible to visualize using the key-arrow.

Menu Line	Description
Power: Kdj-1	Foward RF power on dummy load n°1
Temp:	Temperature of the dummy load n°1
Power: Kdj-2	Foward RF power on dummy load n°2

Temp: Kdj-2	Temperature of the dummy load n°2
Power: Kdj-M	Foward RF power on dummy load n°3 (big load)
Temp: Kdj-M	Temperature of the dummy load n°3 (big load)

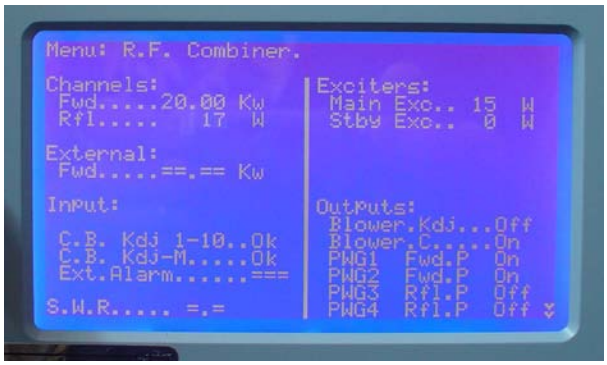

Figure 5-6

Figure 5-7

5.1.6 R.F. Units menù

Information menu showing the status of the RF power amplifier modules. (Figure 5-8). It is composed of 2 screens, one for each module, that can be scrolled using the arrow buttons.

Menu Line	**Description**
Fwd	Measurement of the forward power of the amplifier module
Rfl	Measurement of the reflected power of the amplifier module
Input	Measurement of the driving power at the input of the amplifier module
V.P.A.	Measurement supply voltage of the module (generated from the switching power supply included in each module)
Bias.V	Polarization voltage of the mosfet
Temp	Module temperature
Driver.I	Measurement of the current absorbed by the preamplifier stage
Eff	Efficiency of the amplifier module
Temp (Input)	Temperature alarm
Fuse	Status of the fuses of the RF module
MOS-N (1-8)	Measurement of the current absorbed by the MOS N amplifier module (each RF module contains 8 MOS modules)
RF-Enb	Enabled of power distribution from part of the module

Figure 5-8

Nota: All modules RF must be in REMOTE otherwise will not see any parameters. If from LOCAL it is passed REMOTE, will have to pass approximately 30/40 sec. before being able to visualize the relative state.

5.1.7 Alarms menù

This screen describes all the registered events which are relevant to determine the probable causes of any dysfunction. The screen is composed of a variable number of pages (up to 10) in function of the number of events occurred (Figure 5-9). The last events in chronological order are shown in the first page and so on. To shift to the different pages, use the arrow buttons

It is not possible to cancel the alarms visualized in this menu if not by personal RVR

Menu Column	Description
Unit	Module of the system which generated the failure
Err	Type of failure and description. For more information see chapter 5.4
Time	Time (hrs and minutes) at which the failure occured
Date	Date at which the failure occured

Figure 5-9

5.1.8 Service menù

This menu is normally used during the maintenance operations. When this screen is visualized, the Control Unit checks the status of the modules of the unit more frequently in order to have a visualization of the different parameters as fast as possible. When this menu is entered, all the secondary functions are interrupted, therefore a possible alarm may not be visualized and registered immediately; when exiting this menu all the alarms which were temporarily put in “stand-by” are registered. If the user sets some modules in OFF modality, these will be automatically reactivated when exiting the menu. This menu is deactivated after 60 minutes if no key is selected. (Figure 5-10).

Menu Line	Description
Fwd	Forward power globally emitted by the amplifier
Unb	Unbalancing power dissipated in the dummy load connected to the combiner
RF Unit1 - On	Fields used to switch ON and OFF the amplifier modules.
Fwd	Forward power generated by the RF module
Rfl	Reflect power from the RF module

Figure 5-10

5.1.9 Settings menù

This menu is used for the settings of the unit. It is therefore the menu which is used more often apart from the possible maintenance operations.(Figure 5-11).

Menu Line	Description
Nominal Pwr	Setting of the level of nominal power, expressed as a percentage of the maximum power level. This is the level that the TX20000U-KLC must reach when the Power Nominal button is pressed, except in case of dysfunction
Low Power	Setting of the reduced power level, expressed as a percentage of the maximum power level. This is the level that the TX20000U-KLC must reach when the Power Lower button is pressed, except in case of dysfunction.
PWG1	Level (Limit) at which the “Power Good” PWG1 is launched. This level is expressed as a percentage of the full-scale to which PWG1 is connected, indicated in the column Assign
PWG2	See PWG1
PWG3	See PWG1
PWG4	See PWG1
Exc’ wait time	Delay before assuming the on air exciter is faulty
Talk Address	Address of the unit in the RS485 network
Time	Visualization and setting of the internal clock of the unit
Date	Visualization and setting of the internal calendar of the unit
L.P. Timer	Setting of the automatic power reduction feature: this can be “Auto” (enabled) or “Manual” (disabled). The feature consists in reducing the power to the low power level and then returning to the nominal power at fixed times. The start and stop times are set in this menu selecting “Auto”.
Write Config	Button for the registration of the configurations in each module of the unit.

Figure 5-11

5.1.10 Exciters menù

This menu is used to configure the settings of the exciters (Figure 5-12).

Menu Line	Description
Main Exc	Output power of the exciter currently on air
Stdby Exc	Output power of the exciter currently on the internal dummy load
Main Exciter	Visualization of the “on air” exciter. When positioning the cursor on this line, with the arrow buttons and by pressing Enter, it is possible to operate the switching between the on air exciter and the exciter on dummy load.
Exct.1	Status of the exciter 1. By positioning the cursor on this line with the arrow buttons and by pressing Enter it is possible to switch on and off the exciter.
Exct.2	Same as Exct.1 for the second exciter

Figure 5-12

Nota: the exchange of the eccitatori and the relative cursor are available only if the logic of exchange is set to manual and the yellow LED is lit.

5.1.11 Info menù

This screen informs the user about the configuration of the transmitter. (Figure 5-13).

Menu Line	Description
S.N.	Serial number of the transmitter
Talk Addr.	Address of the RS485 port of the transmitter,it must be obligatorily 3
Baud Rate	Baud rate of the serial port
Software V.	Software version installed in the CCU
Exciter	Number of the exciters in the transmitter: this can be “Single” or “Dual”
Cfg. N+1	Configuration of the transmitter as a N+1 system
External	Checking of the external Fwd, Rfl, Unbal values (Enabled or Disabled)
Reset Safety	Reboot the machine after the intervention of the SAFETY alarm. It must always be “Auto”

Figure 5-13

5.1.12 Release menù

This menu show the address, the kind of configuration, the software version and the hardware version of all the microprocessor boards of the transmitter.(Figure 5-14).

Menu Line	Description
Control unit	Information on the CCU
Cooling	Information on the pumps board
RF Combiner	Information of the RF combiner
RF Unit 1	Information on module 1
RF Unit 2	Information on module 2
RF Unit 3	Information on module 3
RF Unit 4	Information on module 4

Figure 5-14

5.1.13 Modem menù

This screen informs the user about the configuration of the optional telemetry GSM (Figure 5-14). The parameters on this screen can be displayed only if the selector switch on the CCU is located at a REMOTE location, if it is placed in the LOCAL screen appears as in Figure 5-15

Menu Line	Description
I.D.	Identification of the address of the transmitter, usually 1. In the case of multiple transmitters in N +1 configuration will be given numbers in ascending order, one for each transmitter
Name	Mnemonic name of the station, like place or frequency
S.C.N	Service center number of your mobile operator
Info	Name of service provider
Dial	Normally, ATDT
Phone	Phone numbers that will receive the alert messages
Level	GSM signal level
Status	State Modem
Retry	Number of messages to send. We suggest to set this value to at least 2, in case of problems with the SMS Service Centre.
Type	Modem type, usually GSM

Figure 5-14

Figure 5-15

5.2 Buttons, selector switches and LEDs

The typical machine-control operations are performed using the buttons of the control unit's panel. Specific LEDs correspond to each button and selector switch for indicating the machine's status.(Figure 5-16).

Figure 5-16

The functions performed by the controls are as follows:

Funzione	Descrizione
OFF	Button for turning off the machine. A LED signals that the machine is OFF. In this status, the exciters and the pumps,are off.
STDBY	Button for setting the machine in standby. In this status the transmitter does not emit any power, but is ready to start the transmission: RF modules will be placed in "On" and "Wait: Inhibit" (if the sleep-mode, still able to automatically switch to "Off"), in the case of automatic mode exciters are lit but blocked by interlock. The stand-by is used to test the exciters, in fact in manual modality the operator could arrange them in base to the own requirements; coming from an "On" in manual modality, the system does not touch the interlock. Stand-by status is signalled from a LED. In manual and in stand-by the inhibit of the device doesn't intervene on the interlock of the exciters. This could necessary when the apparatus is in configuration n+1 for verify if the exciters are operational.
ON	Button for turning on the transmitter. The RF modules are placed in a position of On, the pump turns on and the command must be set EXCITER CHANGEOVER automatic.The RF power supply is activated. If the command is set to MANUAL CHANGEOVER EXCITER (led on), exciters will block interlock and have to go through in "exciters menu" of CCU to enable them manually.The exciters should deliver a power of at least 15 W to start the transmitter.

	The power delivered by the RF modules will remain stuck at about 800-900 W for about 10 sec., After which it will begin the regular ramp up and reach the set power.
LOC/REM	Selector switch for setting the transmitter in remote or local mode. In local mode the buttons and the controls via the menus are active. In remote mode the buttons and the controls via the menus are inhibited and the commands may be given only remotely via the parallel interface or via the remote control software.
ALARM RESET	Button to reset the alarm type FAULT or WARNING.
POWER LOWER	Click this button to set the transmitter for supplying the nominal power level. A specific LED signals this setting. The value that corresponds to the nominal level is set by the operator using the menu settings (see 5.1.9)
NOMINAL POWER	Click this button to set the transmitter for supplying the reduced power level. A specific LED signals this set-ting. The value that corresponds to the reduced level is set by the operator using the menus. (see 5.1.9)
EXCITER CHANGEOVER	Use this button to set the changeover system in manual or automatic mode. The signaling LED turns on when the manual mode is selected. On performing a changeover, the exciter connected to the amplifier is deviated toward the internal dummy load and vice-versa. The operator must use the exciters menu to perform the changeover in manual mode.
LED WARNING	This LED indicates an attention condition (something is not working properly, but the amplifier is still running)
LED FAULT	This LED indicates a fault (the amplifier is blocked, and required the intervention of an operator for the restoration)
LED WAIT	This LED indicates the status of waiting (the amplifier is temporarily disabled, but will be reactivated automatically when the blockage is removed, or after a set period of time depending on the type of protection)
LED INT.LCK	This LED indicates an external inhibition. This check is run on the parallel interface (JP4/4)
LED TX-BUS INT	These LEDs indicate the activity of the serial bus 485 through which the CCU acquires the status every second of the modules
LED RS-232 TX-BUS EXT	These LEDs indicate the communication between the CCU and a PC connected to the RS-232

5.3 Phase ADJ

It ‘a resonant circuit “LC” with capacitors on the back of the front panel (Figure 5-17).

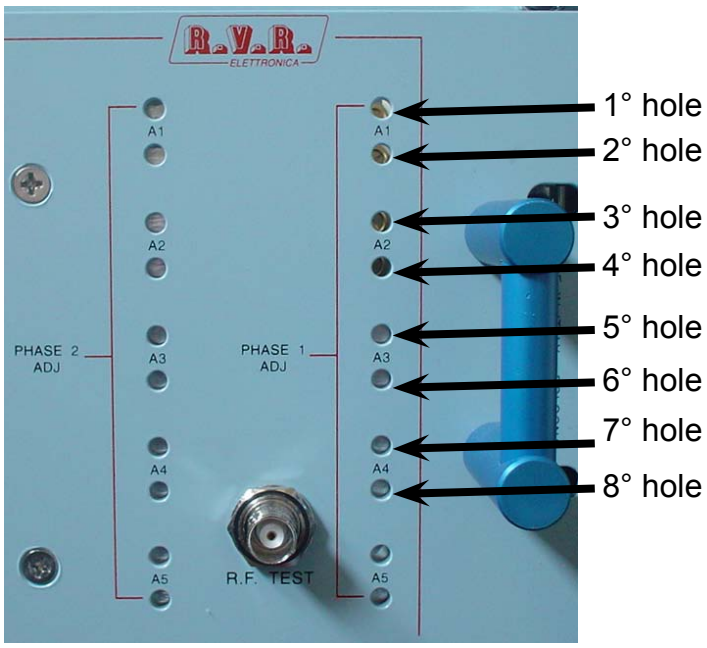

Figure 5-17

It ‘a resonant circuit “LC” with capacitors on the back of the front panel (Figure 5-17).
The purpose of this circuit is to reduce the power on the dummy load connected to the dialer, varying the phase of input signal to each RF module 5 Kw.
The calibration of this circuit is done during testing, but the working conditions by connecting the transmitter to the antenna may require a revision, in which case proceed as described.
The section that interests us is the PHASE ADJ 1 A1 and regulations with regard to the first RF module, A2 for the second, A3 for the third and A4 for the fourth.

Turn off modules n° 3 and 4, using the breakers located to their left, and make adjustments on Modules 1 and 2

1) Insert the screwdriver into the 1 st hole, and rotate 180 degrees clockwise (Pull out the screwdriver) and check the value of the power “Unbalanced” in the service menu (note: the contact of the screwdriver with the circuit “LC” to bring information out of the norm , so the readings must be examined in private screwdriver excerpt)
2) If you obtained a decrease in the value of unbalanced power, go to the second capacitor at the 2 nd hole and also rotate 180 degrees clockwise (go to step 3).
2a) If you obtained a increased rather than decreased power unbalanced to rotate the cap (1° hole) counter-clockwise 360 degrees (180 ° to return it to its starting position to + 180 ° to correct the phase) go to second capacitor at the 2 ° hole and also rotate 180 ° in a counter-clockwise (go to step 3).
3) If the steps set out in paragraph 1 and 2 are not yet sufficient to pass the capacitors of the second RF module (3 rd and 4 th hole), but this time the rotations of the capacitors will be in the opposite direction those made for the holes 1 and 2.
Caution: the second pair of capacitors (3 and 4) must move in the opposite direction to the first.

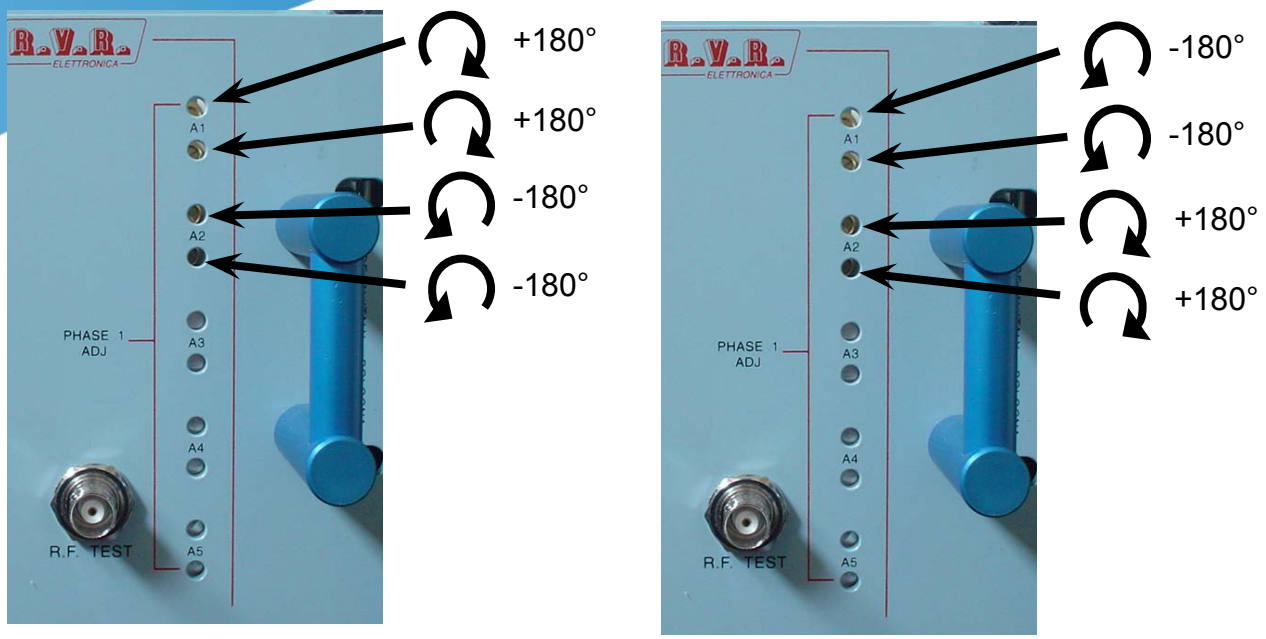

Example of rotation

Turn off modules n° 1 and 2, using the breakers located to their left, and make adjustments on Modules 3 and 4.

1) Insert the screwdriver into the 5 st hole, and rotate 180 degrees clockwise (Pull out the screwdriver) and check the value of the power “Unbalanced” in the service menu (note: the contact of the screwdriver with the circuit “LC” to bring information out of the norm , so the readings must be examined in private screwdriver excerpt)
2) If you obtained a decrease in the value of unbalanced power, go to the second capacitor at the 6 nd hole and also rotate 180 degrees clockwise (go to step 3).
2a) If you obtained a increased rather than decreased power unbalanced to rotate the cap (5° hole) counter-clockwise 360 degrees (180 ° to return it to its starting position to + 180 ° to correct the phase) go to second capacitor at the 6 ° hole and also rotate 180 ° in a counter-clockwise (go to step 3).
3) If the steps set out in paragraph 1 and 2 are not yet sufficient to pass the capacitors of the second RF module (7° and 8° hole), but this time the rotations of the capacitors will be in the opposite direction those made for the holes 5 and 6.
Caution: the second pair of capacitors (5 and 6) must move in the opposite direction to the first.

Then turn on all the modules and put in phase the whole system.
The procedure remains the same as described above but this time the capacitors are moving four at a time.

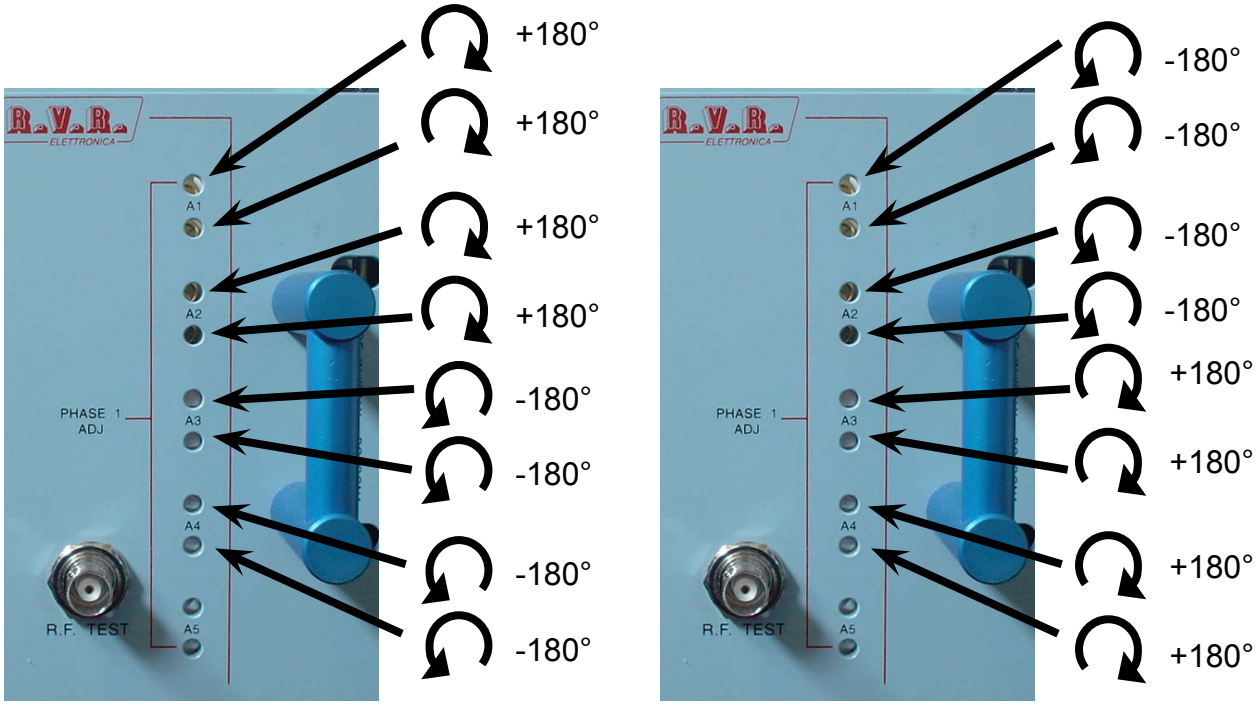

Example of rotation

5.4 Allarms

The menu Alarms of the control unit reports all the events connected to possible malfunctioning of the equipment or due to external causes.
Each registration contains the reference to the concerned module, the kind of event and its date and hour.
The module that detected the event is indicated by one of the following acronyms:

- C.U. (Control Unit)
- P.C. (Pump Control)
- R.F. x (RF module number x [from 1 to 4])
- Combi (Combiner/Splitter)

The type of event allows to identify the origin and the consequence of the fault. The first letter of the type of event can be one of the following:

W "Wait" event that causes the temporary block of the piece of equipment that will be removed as soon as the problem is solved.

R "Retry", event that causes a temporary block of the piece of equipment, that will effect a restart attempt after a fixed lapse of time. (Max. 8 attempts)

F "Fault", event that causes the block of the equipment and requires the intervetion of an operator for the restart.

E "Error", event that doesn't cause the interruption of the supply of power, but can reduce the functions of the equipment (e.g cannot be done the changeover function of the exciters)

The possible event types are listed in the table below.

Code	Meaning
Control Unit	
-E.Intl	external interlock
-A.Intl	ausiliary interlock
-Audio-1	audio alarm of exciter 1 is active
-Audio-2	audio alarm of exciter 2 is active
-L.P.Tmr.	Low power timer active
-Ris-2	reserve 2 input is active
-Ris-3	reserve 3 input is active
-Ris-4	reserve 4 input is active
-Mute Flt	"Mute fault": the mute commands (i.e. the interlock commands for the exciters) are not working, they are not connected or the connection is wrong
-Xchg Exc	a changeover of the exciters has been performed
-Cfg. N+1	The machine is in Fault status because three changeover attempts havebeen performed (N+1 configuration)
Pump Control	
-Air Tmp	air temperature alarm
-Lvl.Min.	minimum coolant level alarm
-Lvl.Low	Low coolant level alarm
-Flux	flow alarm not present
-O.Tmp.L.	thermostat radiator fan 1 ^ level (not displayed)
-O.Tmp.H.	thermostat radiator fan 2 ^ level (not displayed)

-Mains	the phase sequence is not correct
-Press.	coolant pressure alarm circuit too high
Combiner	
-Kdj-1/10	thermostat intervened resistance unbalance
-Kdj Maxi	thermostat external resistors imbalance intervened (TX20000U-KLC)
-Fwd	forward power above its limit
-Rfl	reflected power above its limit
-O.dvr In	overdrive (main exciter)
-O.dvr Ld	Too much power dissipated on the internal dummy load (stand by exciter)
-S.W.R.	SWR above its limit
-Ext.Alr.	external alarm for future use
-Pwr.Kdjx	high power kdj
-Pwr.Kdjm	high power kdj max (load present in the TX20000U-KLC)
R.F. Unit	
-Fwd	forward power alarm module
-Rfl	reflected power alarm module
-In	alarm input power module
-Tmp.	high temperature alarm
-Drv. I	driver current above its limit
-Mos 1 I	high current alarm mos1
-Mos 2 I	high current alarm mos2
-Mos 3 I	high current alarm mos3
-Mos 4 I	high current alarm mos4
-Mos 5 I	high current alarm mos5
-Mos 6 I	high current alarm mos6
-Mos 7 I	high current alarm mos7
-Mos 8 I	high current alarm mos8
-Eff.	efficiency too low
-Fuse	module's fuse broken
-O.Tmp.	overheating on the module's heatsink
General	
-Derating	equipment into derating
-Replay err.	wrong answer by the module interrogated
-Safety	emergency button pressed
Time-out	the module does not respond
Default Talk Address: 31	default address for configuration
Device not configured	control unit is not configured
Waiting for Retry: xxxx sec.	to reset the pause time, press ok
Start Up in Progress	starting up
Please Wait	please wait.....

5.5 Timing timer CCU

CPU control pumps

Evaluation time pump 120 sec.
It 'the time within which to reach the ok from the box pumps (pressure) for stop the exchange sequence.

Time out signal box pressure pumps. 10 sec.
It 'time in a row that the signal of the box must remain pumps failed to activate a request to exchange pumps.

Programmed exchange pumps Time 10 days
It 'time for a smooth and uninterrupted takes place after which a programmed exchange pumps.

Time out after ventilation 5 min.
It 'time for the pumps and fans continue to work after an off the machine.

Auto self pump 24 hrs.
Is the time that the pump is turned on by default, to equipment into off.
Note: the pumps are alternated every 24 hours.

CPU RF combiner

Timer output unbalanced 1 min.
Is the time it is expected before sending a request for power reduction (derating) after passing to the lower level of the unbalanced power.

Timer output high limit unbalanced. 10 sec.
Is the time it takes to wait before the system goes into protection for excess power unbalanced (high limit exceeded).

CCU

Time out display 15 min.
Is the time after which the display returns to the default menu.

Time out display service 60 min.
Is the time from the service menu, the display returns to the default menu.

Time out on power-up evaluation exciters 120 sec.
Is the time that from the start in power off the exciter is programmed to become active.

Time-out evaluation exciters 25 sec.
It is the maximum time of exchange within which the programmed exciter must become active.

Derating time 30 min.
Is the time that the unit remains in power derating after passing to the lower level of the unbalanced power.

5.6 Rear panel

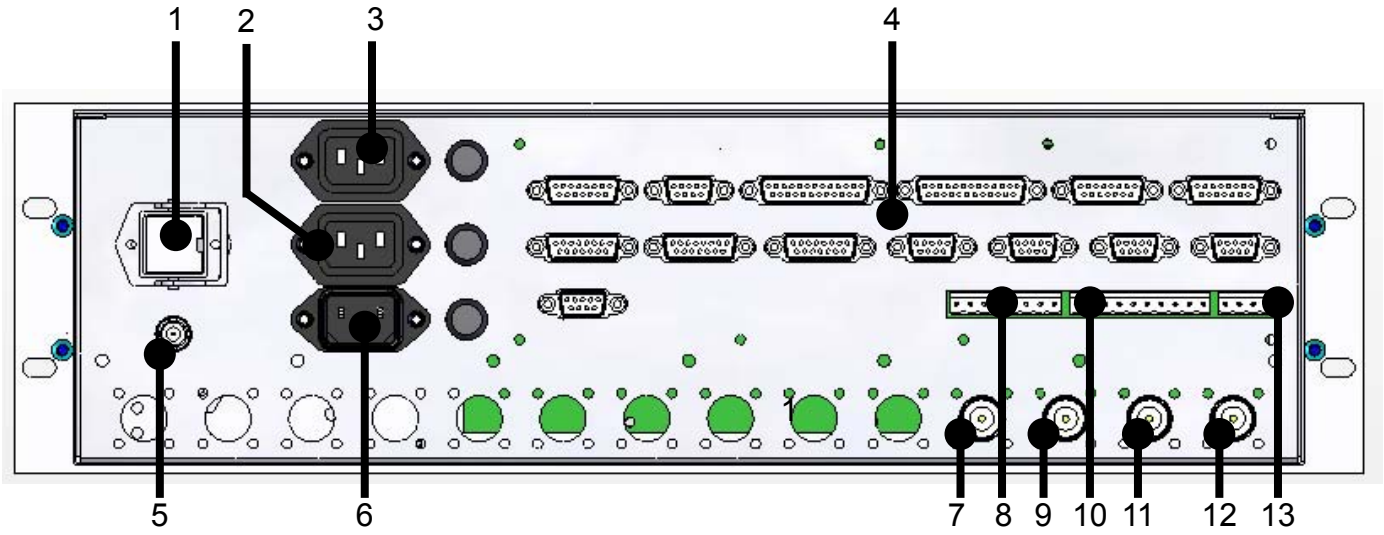

1	Ilme connector for power relay board (24 Vac)
2	VDE power PTX-2 and the fuse (10A)
3	VDE power PTX-1 and the fuse (10A)
4	Connectors various control and acquisition (see cap. 6.4)
5	BNC for RF testing
6	VDE power CCU and the fuse (4A)
7	RF output module 2
8	Connector inhibition functions (see cap. 6.3.1)
9	RF output module 1
10	Sensor input signals
11	Input RF exciter 2
12	Input RF exciter 1
13	Input signals liquid levels

6. Wiring diagrams CCU

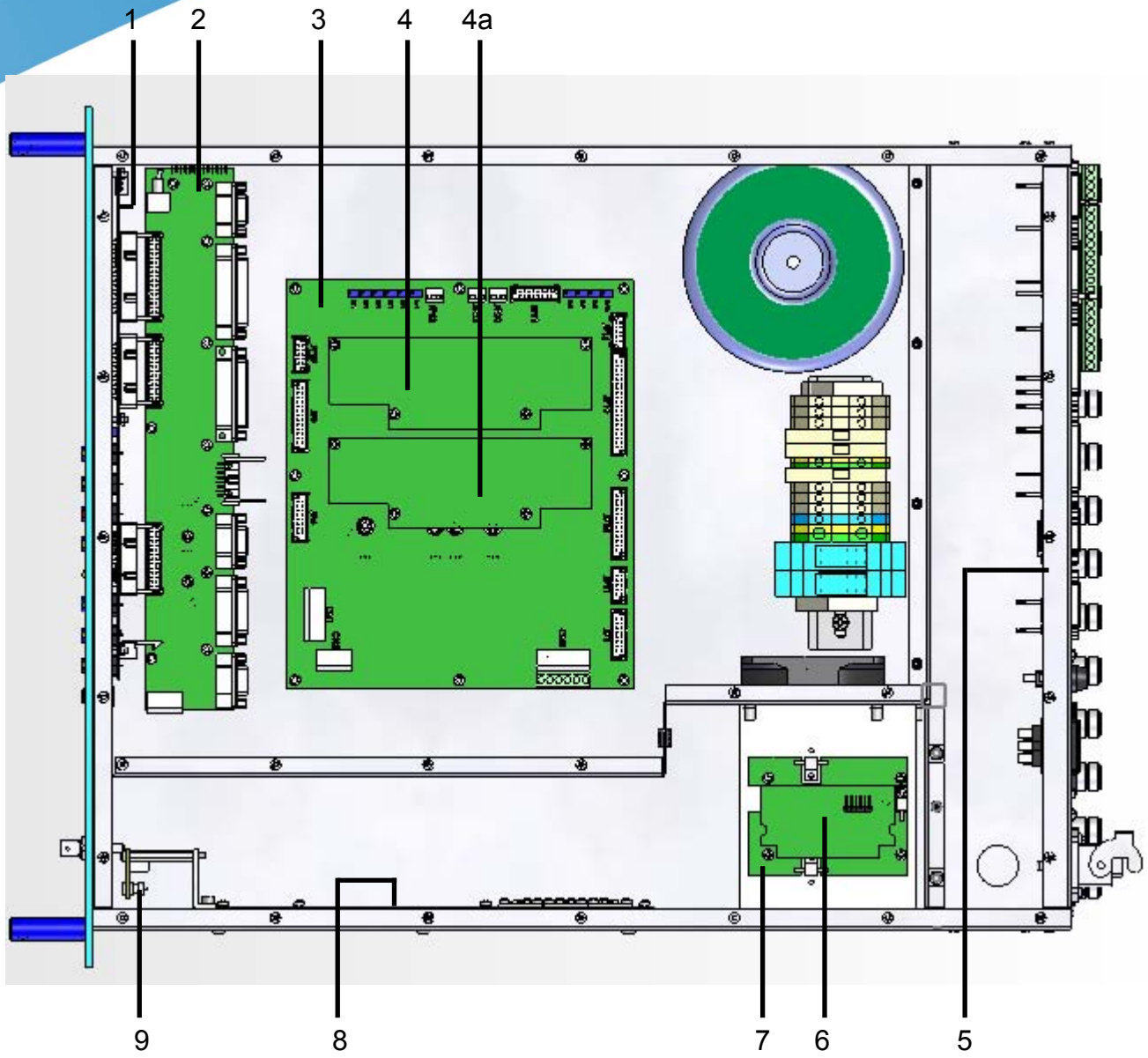

1 **CCU board (SLCCUPJ5KM2)**
2 **CCU motherboard (SLCCU1PJ5KM2)**
3 **Main interface card (SL127IN1002)**
4 **CPU board - management readings/alarms menu R.F. Combiner (CPUPJ2KMC)**
4a **CPU board - management readings/alarms menu Cooling (CPUPJ2KMC)**
5 **External Con. interface card (SL127IN2001)**
6 **Interface exciters RF Switch (SL127IN3001)**
7 **Exciters RF Switch (SL127SW1002)**
8 **Splitter board (SLSPLTHC3-01)**
9 **Phase shifter (SLPHSHHC3-02)**

6.1 CCU board (SLCCUPJ5KM2)

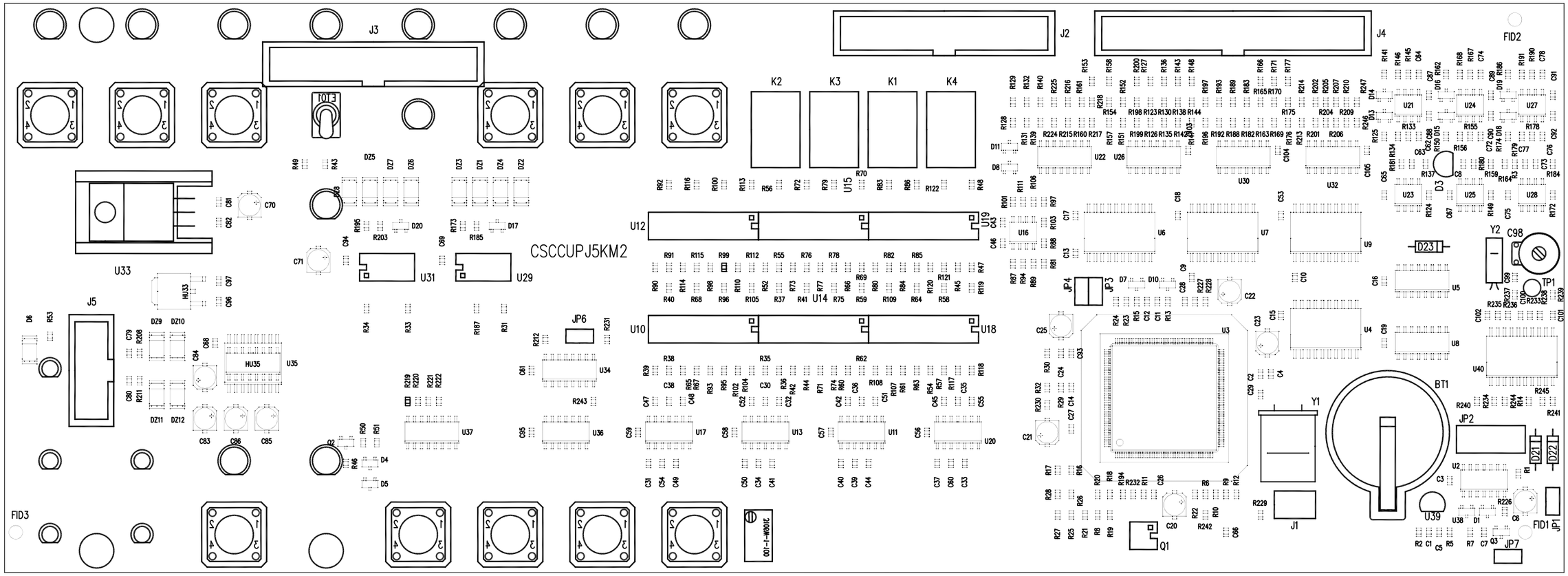

Nome Progetto:	PJ5KPS - Scheda CCU			Pagina: 1 di 1	Size: A3
Autore:	Griptech - Rev.: Canazza	Data:	07/10/2002	Codice Progetto:	<>
Nome PC in Rete:	\\UT_SRV	Revisione:	1.0 (DC)	Nome Parte:	Scheda CCU
File/Cartella:	PJ5_CCU_MNT.DWG	Autorizzazione:		Codice:	SLCCUPJ5KM2
Scala: <>	Materiale: <>	Trattamento:	<>	Profilo:	<>

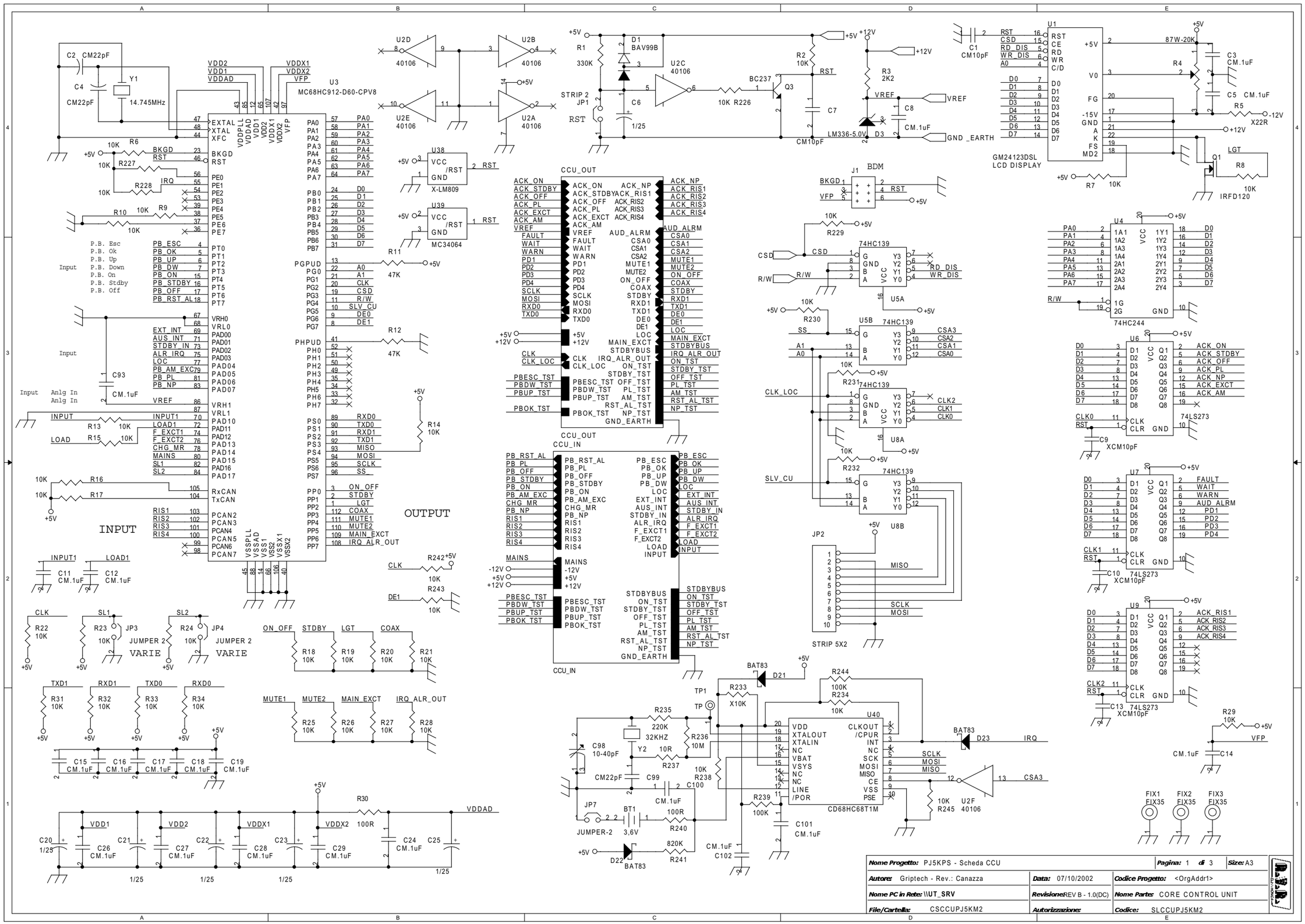
U3
MC68HC912-D60-CPV8
EXTAL
XTAL
XFC
BKGD
RST
PE0
PE1
PE2
PE3
PE4
PE5
PE6
PE7
PT0
PT1
PT2
PT3
PT4
PT5
PT6
PT7
VRH0
VRL0
PAD00
PAD01
PAD02
PAD03
PAD04
PAD05
PAD06
PAD07
VRH1
VRL1
PAD10
PAD11
PAD12
PAD13
PAD14
PAD15
PAD16
PAD17
RxCAN
TxCAN
PCAN2
PCAN3
PCAN4
PCAN5
PCAN6
PCAN7
PA0
PA1
PA2
PA3
PA4
PA5
PA6
PA7
PB0
PB1
PB2
PB3
PB4
PB5
PB6
PB7
PGPUD
PG0
PG1
PG2
PG3
PG4
PG5
PG6
PG7
PHPUD
PH0
PH1
PH2
PH3
PH4
PH5
PH6
PH7
PS0
PS1
PS2
PS3
PS4
PS5
PS6
PS7
PP0
PP1
PP2
PP3
PP4
PP5
PP6
PP7
P.B. Esc
P.B. Ok
P.B. Up
P.B. Down
P.B. On
P.B. Stdby
P.B. Off
PB_ESC
PB_OK
PB_UP
PB_DW
PB_ON
PB_STDBY
PB_OFF
PB_RST_AL
EXT_INT
AUS_INT
STDBY_IN
ALR_IRQ
LOC
PB_AM_EXC
PB_PL
PB_NP
VREF
INPUT
INPUT1
LOAD
LOAD1
F_EXCT1
F_EXCT2
CHG_MR
MAINS
SL1
SL2
RIS1
RIS2
RIS3
RIS4
VSSPLL
VSSAD
VSS1
VSS2
VSSX1
VSSX2
VDDPLL
VDDAD
VDD1
VDD2
VDDX1
VDDX2
VFP
Input
Anlg In
Anlg In
INPUT
OUTPUT
14.745MHz
C2 CM22pF
C4 CM22pF
Y1
R6 10K
R227 10K
R228 10K
R9 10K
R10 10K
C93 CM.1uF
R13 10K
R15 10K
R16 10K
R17 10K
C11 CM.1uF
C12 CM.1uF
R22 10K
R23 10K
JP3 JUMPER 2 VARIE
R24 10K
JP4 JUMPER 2 VARIE
R18 10K
R19 10K
R20 10K
R21 10K
R31 10K
R32 10K
R33 10K
R34 10K
C15 CM.1uF
C16 CM.1uF
C17 CM.1uF
C18 CM.1uF
C19 CM.1uF
R25 10K
R26 10K
R27 10K
R28 10K
R30 100R
C20 1/25
C21 1/25
C22 1/25
C23 1/25
C24 CM.1uF
C25 1/25
C26 CM.1uF
C27 CM.1uF
C28 CM.1uF
C29 CM.1uF
R11 47K
R12 47K
R14 10K
R242 10K
R243 10K
U2D 40106
U2B 40106
U2E 40106
U2A 40106
U38 X-LM809
U39 MC34064
R1 330K
D1 BAV99B
STRIP 2 JP1
C6 1/25
U2C 40106
BC237 Q3
10K R226
R2 10K
C7 CM10pF
LM336-5.0V D3
R3 2K2
C8 CM.1uF
C1 CM10pF
U1
GM24123DSL
LCD DISPLAY
87W-20K
R4
C3 CM.1uF
C5 CM.1uF
R5 X22R
R7 10K
Q1 IRFD120
R8 10K
LGT
J1 BDM
R229 10K
74HC139
U5A
U5B
R230 10K
R231 10K
U8A
R232 10K
U8B
JP2
STRIP 5X2
U4 74HC244
U6 74LS273
U7 74LS273
U9 74LS273
C9 XCM10pF
C10 XCM10pF
C13 XCM10pF
R29 10K
C14 CM.1uF
FIX1 FIX35
FIX2 FIX35
FIX3 FIX35
CCU_OUT
CCU_IN
ACK_ON
ACK_STDBY
ACK_OFF
ACK_PL
ACK_EXCT
ACK_AM
ACK_NP
ACK_RIS1
ACK_RIS2
ACK_RIS3
ACK_RIS4
VREF
FAULT
WAIT
WARN
PD1
PD2
PD3
PD4
SCLK
MOSI
RXD0
TXD0
AUD_ALRM
CSA0
CSA1
CSA2
MUTE1
MUTE2
ON_OFF
COAX
STDBY
RXD1
TXD1
DE0
DE1
LOC
MAIN_EXCT
STDBYBUS
IRQ_ALR_OUT
ON_TST
STDBY_TST
OFF_TST
PL_TST
AM_TST
RST_AL_TST
NP_TST
GND_EARTH
CLK
CLK_LOC
PBESC_TST
PBDW_TST
PBUP_TST
PBOK_TST
MAINS
-12V
+5V
+12V
R233 X10K
R234 100K
R235 220K
R236 10M
R237 10R
R238 10K
R239 100K
R240 100R
R241 820K
R244 100K
C98 10-40pF
Y2 32KHZ
CM22pF C99
C100 CM.1uF
C101 CM.1uF
C102 CM.1uF
JP7 JUMPER-2
BT1 3,6V
D21 BAT83
D22 BAT83
D23 BAT83
TP1
TP
U40 CD68HC68T1M
VDD
XTALOUT
XTALIN
NC
VBAT
VSYS
LINE
/POR
CLKOUT
/CPUR
INT
SCK
MOSI
MISO
CE
VSS
PSE
IRQ
CSA3
CSA2
CSA1
CSA0
CLK2
R245 10K
U2F 40106
Nome Progetto: PJ5KPS - Scheda CCU
Pagina: 1 di 3
Size: A3
Autore: Griptech - Rev.: Canazza
Data: 07/10/2002
Codice Progetto: <OrgAddr1>
Nome PC in Rete: \\UT_SRV
Revisione: REV B - 1.0(DC)
Nome Parte: CORE CONTROL UNIT
File/Cartella: CSCCUPJ5KM2
Autorizzazione:
Codice: SLCCUPJ5KM2

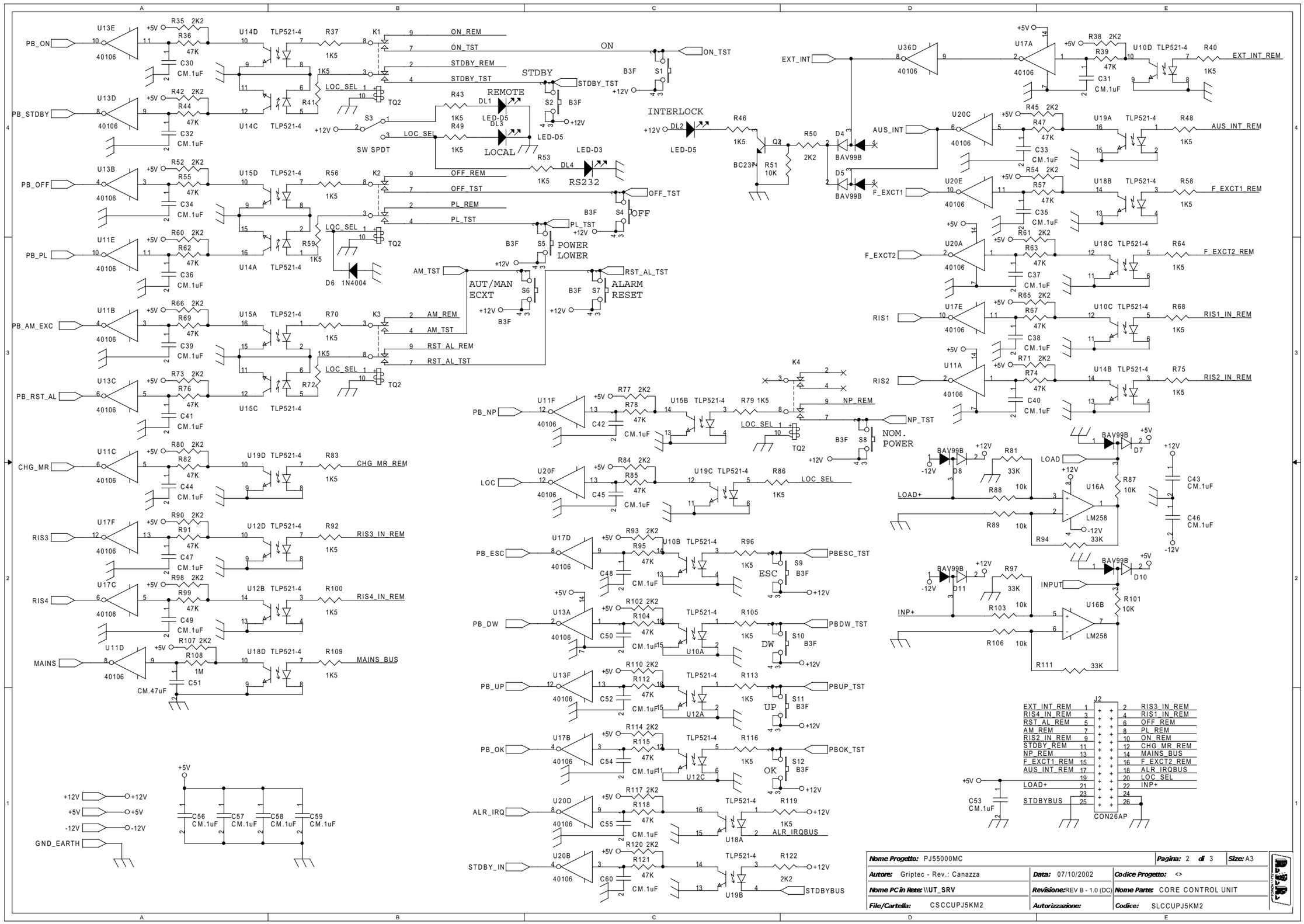

Nome Progetto: PJ55000MC		**Pagina:** 2 **di** 3	**Size:** A3
Autore: Griptec - Rev.: Canazza	**Data:** 07/10/2002	**Codice Progetto:** <>	
Nome PC in Rete: \\UT_SRV	**Revisione:** REV B - 1.0 (DC)	**Nome Parte:** CORE CONTROL UNIT	
File/Cartella: CSCCUPJ5KM2	**Autorizzazione:**	**Codice:** SLCCUPJ5KM2	

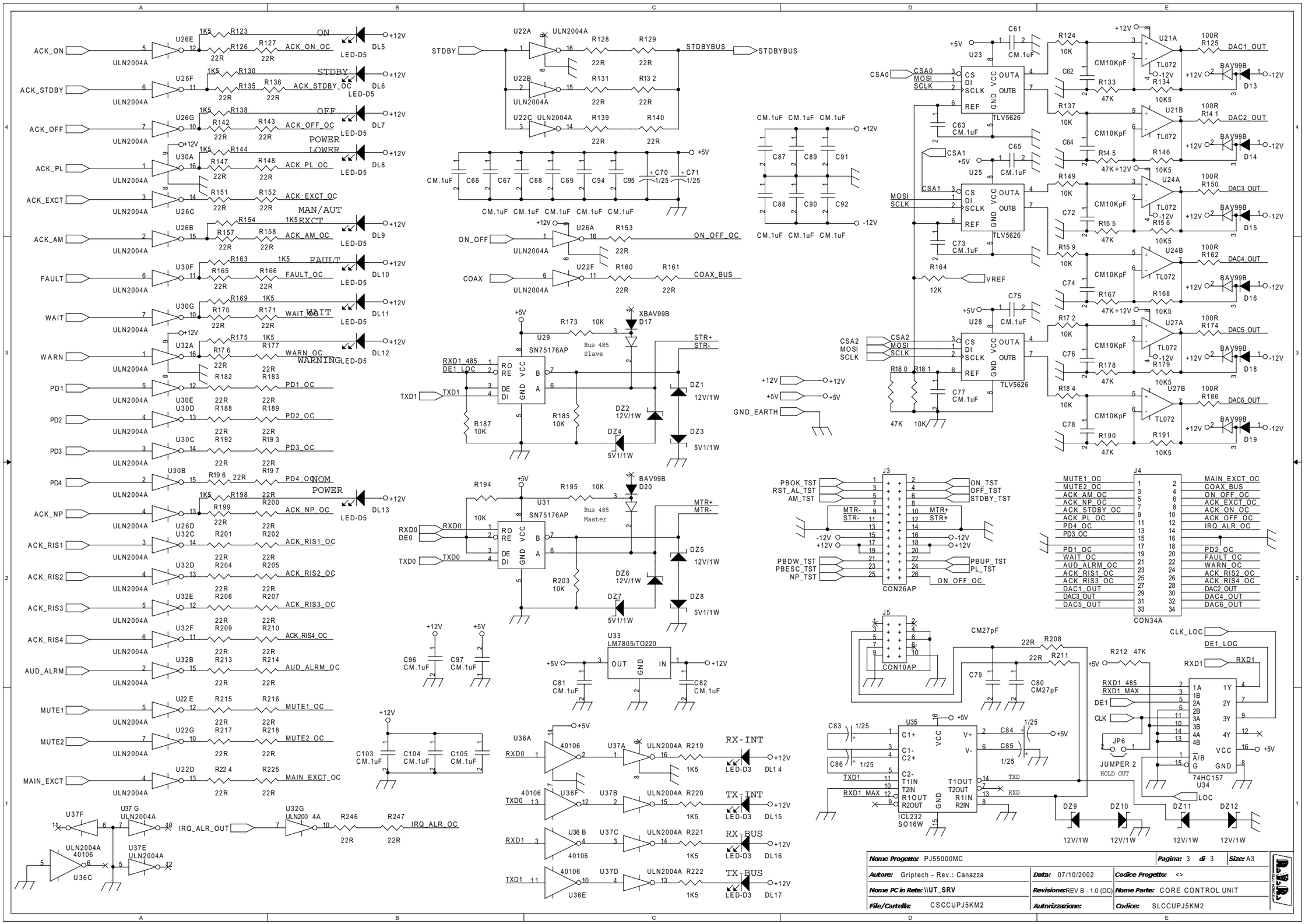
ACK_ON
ACK_STDBY
ACK_OFF
ACK_PL
ACK_EXCT
ACK_AM
FAULT
WAIT
WARN
PD1
PD2
PD3
PD4
ACK_NP
ACK_RIS1
ACK_RIS2
ACK_RIS3
ACK_RIS4
AUD_ALRM
MUTE1
MUTE2
MAIN_EXCT
ULN2004A
LED-D5
ON
STDBY
OFF
POWER
LOWER
MAN/AUT
EXCT
FAULT
WAIT
WARNING
NOM
STDBYBUS
ON_OFF_OC
COAX_BUS
SN75176AP
Bus 485 Slave
Bus 485 Master
RXD1 485
DE1 LOC
TXD1
RXD0
DE0
TXD0
STR+
STR-
MTR+
MTR-
DZ1
DZ2
DZ3
DZ4
DZ5
DZ6
DZ7
DZ8
12V/1W
5V1/1W
GND_EARTH
PBOK_TST
RST_AL_TST
AM_TST
PBDW_TST
PBESC_TST
NP_TST
ON_TST
OFF_TST
STDBY_TST
PBUP_TST
PL_TST
CON26AP
CON34A
CON10AP
MUTE1_OC
MUTE2_OC
ACK_AM_OC
ACK_NP_OC
ACK_STDBY_OC
ACK_PL_OC
PD4_OC
PD3_OC
PD1_OC
WAIT_OC
AUD_ALRM_OC
ACK_RIS1_OC
ACK_RIS3_OC
DAC1_OUT
DAC3_OUT
DAC5_OUT
MAIN_EXCT_OC
COAX_BUS
ON_OFF_OC
ACK_EXCT_OC
ACK_ON_OC
ACK_OFF_OC
IRQ_ALR_OC
PD2_OC
FAULT_OC
WARN_OC
ACK_RIS2_OC
ACK_RIS4_OC
DAC2_OUT
DAC4_OUT
DAC6_OUT
CSA0
CSA1
CSA2
MOSI
SCLK
VREF
TLV5626
TL072
DAC1_OUT
DAC2_OUT
DAC3_OUT
DAC4_OUT
DAC5_OUT
DAC6_OUT
CLK_LOC
DE1_LOC
RXD1
RXD1_485
RXD1_MAX
DE1
CLK
JUMPER 2
HOLD OUT
74HC157
ICL232
SO16W
RX-INT
TX-INT
RX-BUS
TX-BUS
IRQ_ALR_OUT
Nome Progetto: PJ55000MC
Pagina: 3 di 3
Size: A3
Autore: Griptech - Rev.: Canazza
Data: 07/10/2002
Codice Progetto: <>
Nome PC in Rete: \\UT_SRV
Revisione: REV B - 1.0 (DC)
Nome Parte: CORE CONTROL UNIT
File/Cartella: CSCCUPJ5KM2
Autorizzazione:
Codice: SLCCUPJ5KM2

CORE CONTROL UNIT Revised: Tuesday, March 18, 2014
SLCCUPJ5KM2 Revision: REV B - 1.0(DC)

PJ5KPS - Scheda CCU
<>
CSCCUPJ5KM2
Griptech - Rev.: Canazza
07/10/2002

Bill Of Materi Page1

Item	Quantity	Reference	Part	
1	1	BT1	3,6V	
2	2	C1,C7	CM10pF	
3	3	C2,C4,C99	CM22pF	
4	75	C3,C5,C8,C11,C12,C14,C15, C16,C17,C18,C19,C24,C26, C27,C28,C29,C30,C31,C32, C33,C34,C35,C36,C37,C38, C39,C40,C41,C42,C43,C44, C45,C46,C47,C48,C49,C50, C52,C53,C54,C55,C56,C57, C58,C59,C60,C61,C63,C65, C66,C67,C68,C69,C73,C75, C77,C81,C82,C87,C88,C89, C90,C91,C92,C93,C94,C95, C96,C97,C100,C101,C102, C103,C104,C105	CM.1uF	
5	12	C6,C20,C21,C22,C23,C25, C70,C71,C83,C84,C85,C86		gen-25
6	3	C9,C10,C13	XCM10pF	
7	1	C51	CM.47uF	
8	6	C62,C64,C72,C74,C76,C78	CM10KpF	
9	2	C79,C80	CM27pF	
10	1	C98	10-40pF	
11	12	DL1,DL2,DL3,DL5,DL6,DL7, DL8,DL9,DL10,DL11,DL12, DL13	LED-D5	
12	5	DL4,DL14,DL15,DL16,DL17	LED-D3	
13	8	DZ1,DZ2,DZ5,DZ6,DZ9,DZ10, DZ11,DZ12	12V/1W	
14	4	DZ3,DZ4,DZ7,DZ8	5V1/1W	
15	14	D1,D4,D5,D7,D8,D10,D11, D13,D14,D15,D16,D18,D19, D20	BAV99B	
16	1	D3	LM336-5.0V	
17	1	D6	1N4004	
18	1	D17	XBAV99B	
19	3	D21,D22,D23	BAT83	
20	3	FIX1,FIX2,FIX3	FIX35	
21	1	JP1	STRIP 2	
22	1	JP2	STRIP 5X2	
23	3	JP3,JP4,JP6	JUMPER 2	
24	1	JP7	JUMPER-2	
25	1	J1	BDM	
26	2	J2,J3	CON26AP	
27	1	J4	CON34A	
28	1	J5	CON10AP	
29	4	K1,K2,K3,K4	TQ2	
30	1	Q1	IRFD120	
31	2	Q2,Q3	BC237	
32	1	R1	330K	
33	59	R2,R6,R7,R8,R9,R10,R13, R14,R15,R16,R17,R18,R19, R20,R21,R22,R23,R24,R25, R26,R27,R28,R29,R31,R32, R33,R34,R51,R87,R88,R89, R101,R103,R106,R124,R137, R149,R159,R172,R173,R181, R184,R185,R187,R194,R195, R203,R226,R227,R228,R229, R230,R231,R232,R234,R238, R242,R243,R245	10K	
34	27	R3,R35,R38,R42,R45,R50, R52,R54,R60,R61,R65,R66, R71,R73,R77,R80,R84,R90, R93,R98,R102,R107,R110, R114,R117,R120,R122	2K2	
35	1	R4	87W-20K	
36	1	R5	X22R	
37	33	R11,R12,R36,R39,R44,R47, R55,R57,R62,R63,R67,R69, R74,R76,R78,R82,R85,R91, R95,R99,R104,R112,R115, R118,R121,R133,R145,R155, R167,R178,R180,R190,R212	47K	
38	8	R30,R125,R141,R150,R162, R174,R186,R240	100R	
39	40	R37,R40,R41,R43,R46,R48, R49,R53,R56,R58,R59,R64, R68,R70,R72,R75,R79,R83, R86,R92,R96,R100,R105, R109,R113,R116,R119,R123, R130,R138,R144,R154,R163, R169,R175,R198,R219,R220, R221,R222	1K5	
40	4	R81,R94,R97,R111	33K	
41	1	R108	1M	
42	57	R126,R127,R128,R129,R131, R132,R135,R136,R139,R140, R142,R143,R147,R148,R151, R152,R153,R157,R158,R160, R161,R165,R166,R170,R171, R176,R177,R182,R183,R188, R189,R192,R193,R196,R197, R199,R200,R201,R202,R204, R205,R206,R207,R208,R209, R210,R211,R213,R214,R215, R216,R217,R218,R224,R225, R246,R247	22R	
43	6	R134,R146,R156,R168,R179, R191	10K5	
44	1	R164	12K	
45	1	R233	X10K	
46	1	R235	220K	
47	1	R236	10M	
48	1	R237	10R	
49	2	R239,R244	100K	
50	1	R241	820K	
51	11	S1,S2,S4,S5,S6,S7,S8,S9, S10,S11,S12	B3F	
52	1	S3	SW SPDT	
53	1	TP1	TP	
54	1	U1	GM24123DSL	
55	6	U2,U11,U13,U17,U20,U36		40106
56	1	U3	MC68HC912-D60-CPV8	
57	1	U4	74HC244	
58	2	U5,U8	74HC139	
59	3	U6,U7,U9	74LS273	
60	6	U10,U12,U14,U15,U18,U19	TLP521-4	
61	1	U16	LM258	
62	3	U21,U24,U27	TL072	
63	5	U22,U26,U30,U32,U37	ULN2004A	
64	3	U23,U25,U28	TLV5626	
65	2	U29,U31	SN75176AP	
66	1	U33	LM7805/TO220	
67	1	U34	74HC157	
68	1	U35	ICL232	
69	1	U38	X-LM809	
70	1	U39	MC34064	
71	1	U40	CD68HC68T1M	
72	1	Y1	14.745MHz	
73	1	Y2	32KHZ	

6.2 CCU motherboard (SLCCU1PJ5KM2)

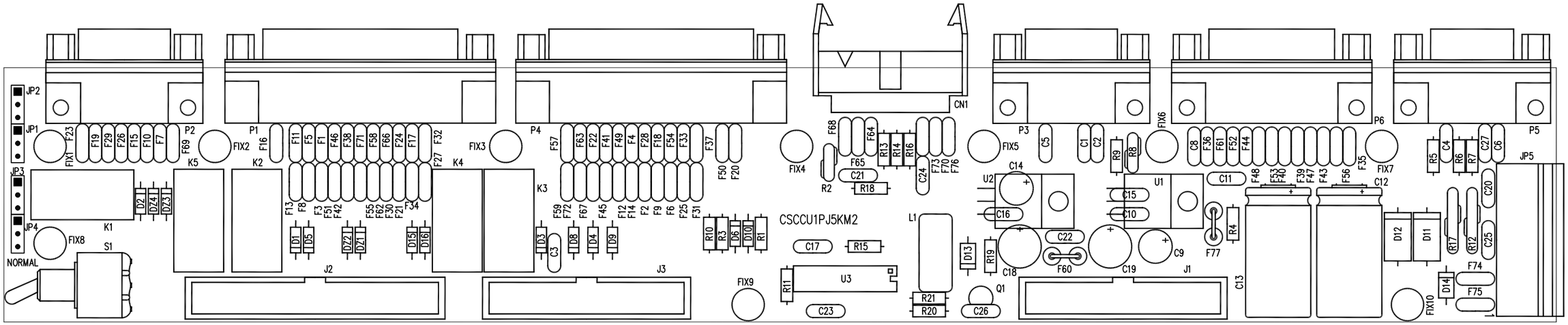

Nome Progetto:	PJ5KPS - Scheda madre CCU			Pagina: 1 di 1	Size: A3
Autore:	Griptech - Rev.: Canazza	Data:	07/10/2002	Codice Progetto:	<>
Nome PC in Rete:	\\UT_SRV	Revisione:	1.0 (DC)	Nome Parte:	Schedra madre CCU
File/Cartella:	CCU1PJK5_1_LY.DWG	Autorizzazione:		Codice:	SLCCU1PJ5KM2
Scala: <>	Materiale: <>	Trattamento:	<>	Profilo:	<>

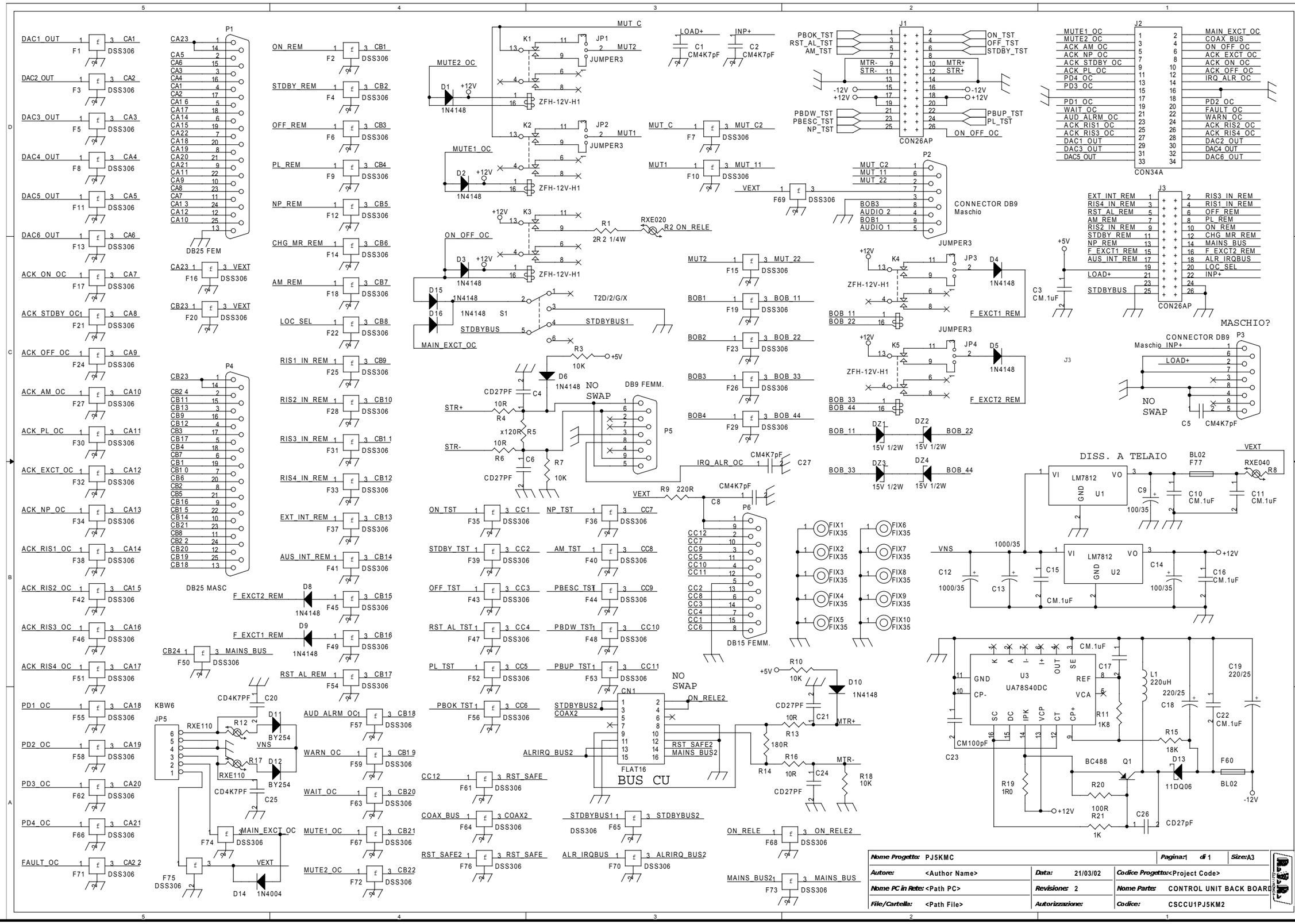
DAC1_OUT
DAC2_OUT
DAC3_OUT
DAC4_OUT
DAC5_OUT
DAC6_OUT
ACK_ON_OC
ACK_STDBY_OC
ACK_OFF_OC
ACK_AM_OC
ACK_PL_OC
ACK_EXCT_OC
ACK_NP_OC
ACK_RIS1_OC
ACK_RIS2_OC
ACK_RIS3_OC
ACK_RIS4_OC
PD1_OC
PD2_OC
PD3_OC
PD4_OC
FAULT_OC
DSS306
P1
DB25 FEM
P4
DB25 MASC
ON_REM
STDBY_REM
OFF_REM
PL_REM
NP_REM
CHG_MR_REM
AM_REM
LOC_SEL
RIS1_IN_REM
RIS2_IN_REM
RIS3_IN_REM
RIS4_IN_REM
EXT_INT_REM
AUS_INT_REM
F_EXCT2_REM
F_EXCT1_REM
MAINS_BUS
RST_AL_REM
AUD_ALRM_OC
WARN_OC
WAIT_OC
MUTE1_OC
MUTE2_OC
MUTE2_OC
MUTE1_OC
ON_OFF_OC
MAIN_EXCT_OC
ZFH-12V-H1
JUMPER3
T2D/2/G/X
STDBYBUS
STDBYBUS1
NO SWAP
DB9 FEMM.
P5
P6
DB15 FEMM.
STR+
STR-
ON_TST
STDBY_TST
OFF_TST
RST_AL_TST
PL_TST
PBOK_TST
NP_TST
AM_TST
PBESC_TST
PBDW_TST
PBUP_TST
STDBYBUS2
COAX2
ALRIRQ_BUS2
RST_SAFE
RST_SAFE2
ALR_IRQBUS
ALRIRQ_BUS2
FLAT16
BUS CU
CN1
ON_RELE2
ON_RELE
MAINS_BUS2
MAINS_BUS
KBW6
JP5
RXE110
BY254
VNS
VEXT
MAIN_EXCT_OC
LOAD+
INP+
MUT_C
MUT_C2
MUT_11
MUT_22
BOB_11
BOB_22
BOB_33
BOB_44
IRQ_ALR_OC
CM4K7pF
J1
CON26AP
PBOK_TST
RST_AL_TST
AM_TST
PBDW_TST
PBESC_TST
NP_TST
ON_TST
OFF_TST
STDBY_TST
PBUP_TST
PL_TST
ON_OFF_OC
MTR-
STR-
MTR+
STR+
-12V
+12V
J2
CON34A
MUTE1_OC
MUTE2_OC
ACK_AM_OC
ACK_NP_OC
ACK_STDBY_OC
ACK_PL_OC
PD4_OC
PD3_OC
PD1_OC
WAIT_OC
AUD_ALRM_OC
ACK_RIS1_OC
ACK_RIS3_OC
DAC1_OUT
DAC3_OUT
DAC5_OUT
MAIN_EXCT_OC
COAX_BUS
ON_OFF_OC
ACK_EXCT_OC
ACK_ON_OC
ACK_OFF_OC
IRQ_ALR_OC
PD2_OC
FAULT_OC
WARN_OC
ACK_RIS2_OC
ACK_RIS4_OC
DAC2_OUT
DAC4_OUT
DAC6_OUT
P2
CONNECTOR DB9
Maschio
BOB3
AUDIO 2
BOB1
AUDIO 1
J3
CON26AP
EXT_INT_REM
RIS4_IN_REM
RST_AL_REM
AM_REM
RIS2_IN_REM
STDBY_REM
NP_REM
F_EXCT1_REM
AUS_INT_REM
LOAD+
STDBYBUS
RIS3_IN_REM
RIS1_IN_REM
OFF_REM
PL_REM
ON_REM
CHG_MR_REM
MAINS_BUS
F_EXCT2_REM
ALR_IRQBUS
LOC_SEL
INP+
MASCHIO?
CONNECTOR DB9
Maschio
INP+
LOAD+
NO SWAP
DISS. A TELAIO
LM7812
U1
U2
VI
VO
GND
BL02
RXE040
VNS
+12V
-12V
U3
UA78S40DC
GND
CP-
REF
VCA
SC
DC
IPK
VCP
CT
CP+
CM.1uF
CM100pF
L1
220uH
BC488
Q1
11DQ06
BL02
Nome Progetto: PJ5KMC
Pagina: 1 di 1
Size: A3
Autore: <Author Name>
Data: 21/03/02
Codice Progetto: <Project Code>
Nome PC in Rete: <Path PC>
Revisione: 2
Nome Parte: CONTROL UNIT BACK BOARD
File/Cartella: <Path File>
Autorizzazione:
Codice: CSCCU1PJ5KM2

Revised: Tuesday, March 18, 2014
Revision:

Bill Of Mat Page1

Item	Quantity	Reference	Part
1	1	CN1	FLAT16
2	5	C1,C2,C5,C8,C27	CM4K7pF
3	7	C3,C10,C11,C15,C16,C17, C22	CM.1uF
4	5	C4,C6,C21,C24,C26	CD27pF
5	2	C9,C14	100/35
6	2	C12,C13	1000/35
7	2	C18,C19	220/25
8	2	C20,C25	CD4K7PF
9	1	C23	CM100pF
10	4	DZ1,DZ2,DZ3,DZ4	15V 1/2W
11	11	D1,D2,D3,D4,D5,D6,D8,D9, D10,D15,D16	1N4148
12	2	D11,D12	BY254
13	1	D13	11DQ06
14	1	D14	1N4004
15	10	FIX1,FIX2,FIX3,FIX4,FIX5, FIX6,FIX7,FIX8,FIX9, FIX10	FIX35
16	75	F1,F2,F3,F4,F5,F6,F7,F8, F9,F10,F11,F12,F13,F14, F15,F16,F17,F18,F19,F20, F21,F22,F23,F24,F25,F26, F27,F28,F29,F30,F31,F32, F33,F34,F35,F36,F37,F38, F39,F40,F41,F42,F43,F44, F45,F46,F47,F48,F49,F50, F51,F52,F53,F54,F55,F56, F57,F58,F59,F61,F62,F63, F64,F65,F66,F67,F68,F69, F70,F71,F72,F73,F74,F75, F76	DSS306
17	2	F60,F77	BL02
18	4	JP1,JP2,JP3,JP4	JUMPER3
19	1	JP5	KBW6
20	2	J1,J3	CON26AP
21	1	J2	CON34A
22	5	K1,K2,K3,K4,K5	ZFH-12V-H1
23	1	L1	220uH
24	1	P1	DB25 FEM
25	2	P2,P3	CONNECTOR DB9
26	1	P4	DB25 MASC
27	1	P5	DB9 FEMM.
28	1	P6	DB15 FEMM.
29	1	Q1	BC488
30	1	R1	2R2 1/4W
31	1	R2	RXE020
32	4	R3,R7,R10,R18	10K
33	4	R4,R6,R13,R16	10R
34	1	R5	x120R
35	1	R8	RXE040
36	1	R9	220R
37	1	R11	1K8
38	2	R12,R17	RXE110
39	1	R14	180R
40	1	R15	18K
41	1	R19	1R0
42	1	R20	100R
43	1	R21	1K
44	1	S1	T2D/2/G/X
45	2	U1,U2	LM7812
46	1	U3	UA78S40DC

6.2.1 Settings

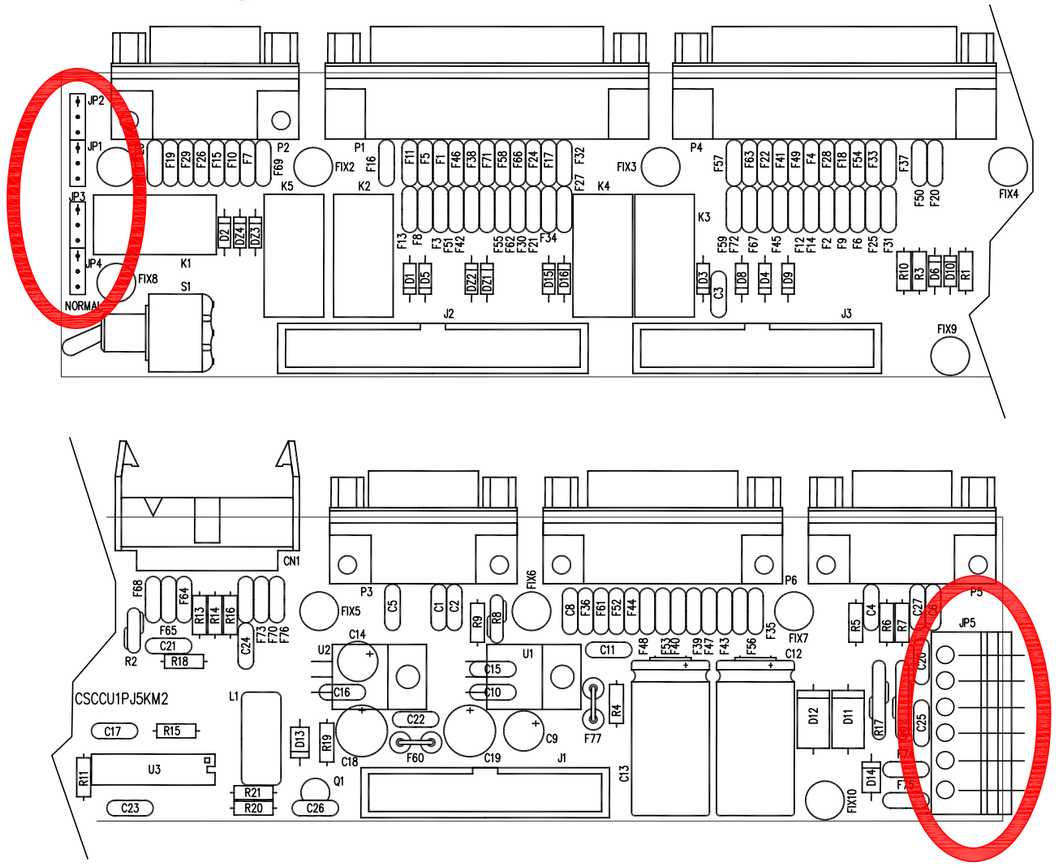

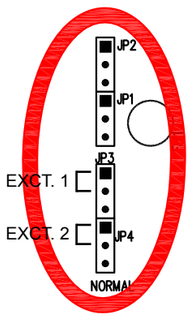

Leaving the jumpers as shown in the figure, the audio alarm is active, that is, when the audio is no longer present at the exciter, at the time of on air, the system automatically switches on the other exciter. Removing the jumpers the audio alarm is disabled. We must also disable the control “ExPwr” on the related modulator, to do this must be removed from the connector JP8 of panel card (located in the front of the PTX-LCD), the “Jump 4” if the modulator mounts the CPU 8-bit, instead you have to remove the “Jump 5” if the modulator is equipped with the 16-bit CPU.

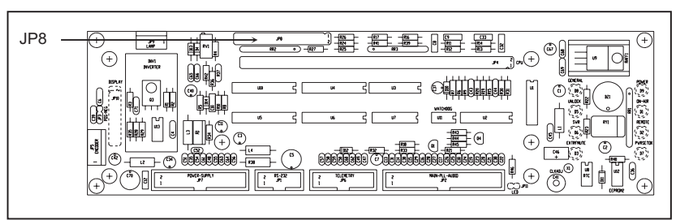

Panel card

Meaning Jump JP8 with 8-bit CPU

JP8 Position of panel card jumpers.

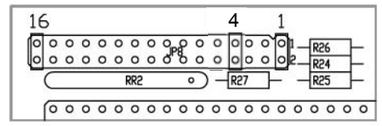

The software denotes jumper positions as follows (1 signifies a closed jumper, 0 open jumper, X any position):

Jump 4	Jump 5	Jump 6	Jump 7	Jump 8	Meaning
0	0	X	X	X	ExPwr, ExSts and ExFrq menu disabled
1	0	X	X	X	ExPwr and ExSts menu enabled, ExFrq menu disabled
0	1	X	X	X	ExPwr and ExSts menu disabled, ExFrq enabled
1	1	X	X	X	ExPwr, ExSts and ExFrq disabled
X	X	0	0	0	Default parameters set in case of exciter reset: CCIR for PLL at 10MHz
X	X	1	0	0	Default parameters set in case of exciter reset: FCC
X	X	0	1	0	Default parameters set in case of exciter reset: OIRT
X	X	1	1	0	Default parameters set in case of exciter reset: Japan
X	X	0	0	1	Default parameters set in case of exciter reset: Italy
X	X	1	0	1	Default parameters set in case of exciter reset: CSI
X	X	0	1	1	Default parameters set in case of exciter reset: China
X	X	1	1	1	Reserved for future applications

Meaning Jump JP8 with 16-bit CPU

JP8 Position of panel card jumpers.

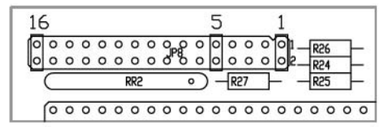

The software denotes jumper positions as follows (1 signifies a closed jumper, 0 open jumper, X any position):

Jump 5	Jump 6	Jump 7	Jump 8	Jump 9	Jump 10	Jump 11	Jump 12	Jump 13	Jump 14	Meaning
0	0	X	X	X	X	X	X	X	X	ExPwr, ExSts and ExFrq menu disabled
1	0	X	X	X	X	X	X	X	X	ExPwr and ExSts menu enabled, ExFrq menu disabled
0	1	X	X	X	X	X	X	X	X	ExPwr and ExSts menu disabled, ExFrq enabled
1	1	X	X	X	X	X	X	X	X	ExPwr, ExSts and ExFrq disabled
X	X	0	0	0	X	X	X	X	X	Default parameters set in case of exciter reset: CCIR for PLL at 10MHz
X	X	1	0	0	X	X	X	X	X	Default parameters set in case of exciter reset: FCC
X	X	0	1	0	X	X	X	X	X	Default parameters set in case of exciter reset: OIRT
X	X	1	1	0	X	X	X	X	X	Default parameters set in case of exciter reset: Japan
X	X	0	0	1	X	X	X	X	X	Default parameters set in case of exciter reset: Italia
X	X	1	0	1	X	X	X	X	X	Default parameters set in case of exciter reset: CSI
X	X	0	1	1	X	X	X	X	X	Reserved for future applications
X	X	1	1	1	X	X	X	X	X	Reserved for future applications
X	X	X	X	X	1	X	X	X	X	MAINS alarm enabling. NOTE: in this case is necessary to move the two jumpers from positions 3-5 and 4-6 to the positions 1-3 and 2-4, of Supply card JP6 jumper(see fig. below)
X	X	X	X	X	X	1	X	X	X	TRDSP optional card presence
X	X	X	X	X	X	X	1	X	X	13 MHz Quartz frequency on PLL card
X	X	X	X	X	X	X	X	1	X	Telemetry optional card presence
X	X	X	X	X	X	X	X	X	1	SFN software version (only for TRDSP)

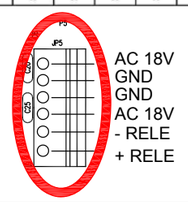

Power supply pinout

6.3 Main interface card (SL127IN1002)

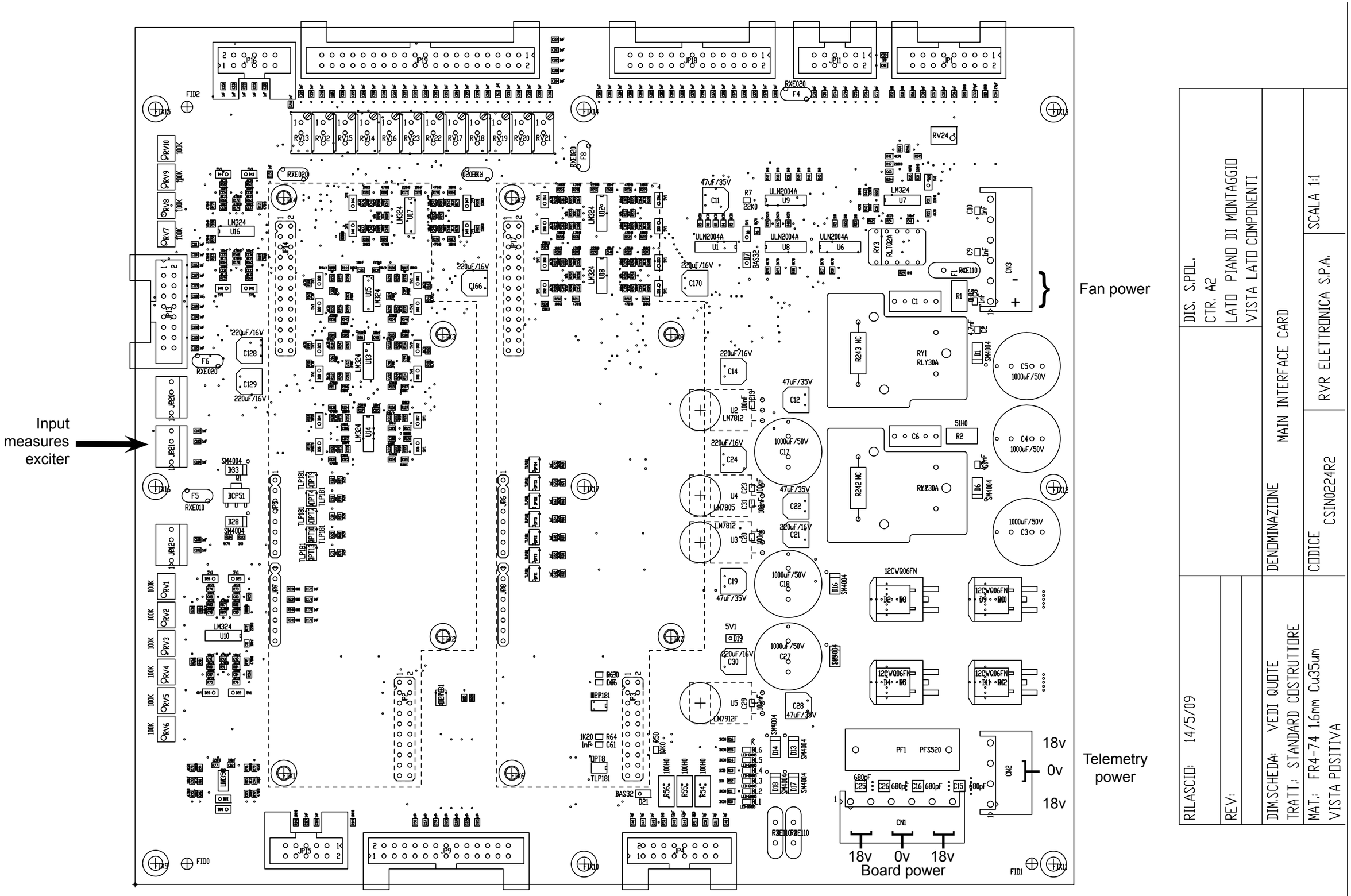

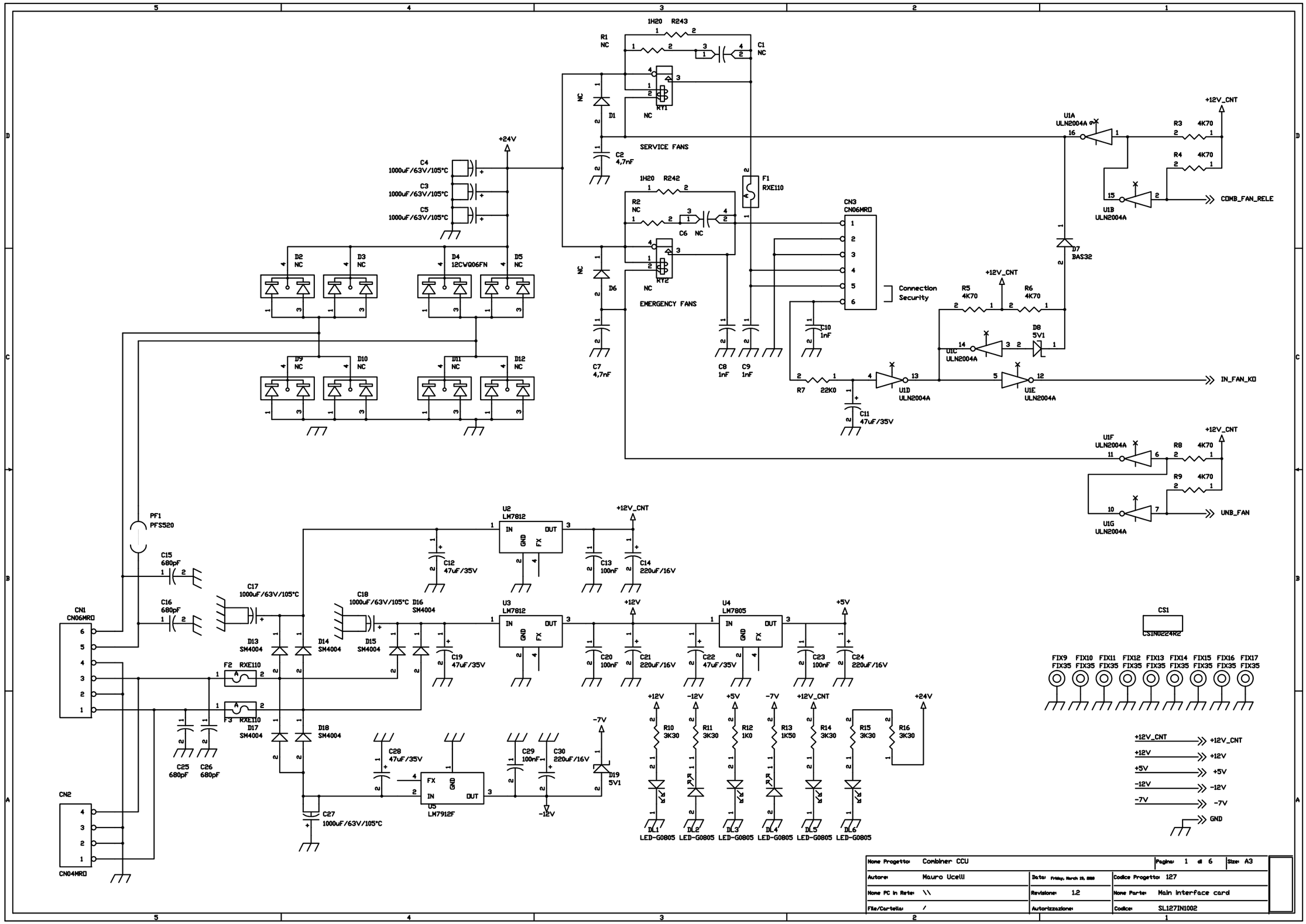
1H20 R243
R1 NC
C1 NC
RY1 NC
D1
SERVICE FANS
C2 4,7nF
1H20 R242
R2 NC
C6 NC
RY2 NC
D6
EMERGENCY FANS
F1 RXE110
+24V
C4 1000uF/63V/105°C
C3 1000uF/63V/105°C
C5 1000uF/63V/105°C
D2 NC
D3 NC
D4 12CWQ06FN
D5 NC
D9 NC
D10 NC
D11 NC
D12 NC
C7 4,7nF
C8 1nF
C9 1nF
CN3 CN06MRD
Connection Security
C10 1nF
R7 22K0
C11 47uF/35V
U1D ULN2004A
U1A ULN2004A
U1B ULN2004A
U1C ULN2004A
U1E ULN2004A
U1F ULN2004A
U1G ULN2004A
+12V_CNT
R3 4K70
R4 4K70
R5 4K70
R6 4K70
R8 4K70
R9 4K70
D7 BAS32
D8 5V1
COMB_FAN_RELE
IN_FAN_KO
UNB_FAN
PF1 PFS20
C15 680pF
C16 680pF
C17 1000uF/63V/105°C
C18 1000uF/63V/105°C
D13 SM4004
D14 SM4004
D15 SM4004
D16 SM4004
D17 SM4004
D18 SM4004
F2 RXE110
F3 RXE110
C25 680pF
C26 680pF
C27 1000uF/63V/105°C
CN1 CN06MRD
CN2 CN04MRD
U2 LM7812
U3 LM7812
U4 LM7805
U5 LM7912F
C12 47uF/35V
C13 100nF
C14 220uF/16V
C19 47uF/35V
C20 100nF
C21 220uF/16V
C22 47uF/35V
C23 100nF
C24 220uF/16V
C28 47uF/35V
C29 100nF
C30 220uF/16V
+12V
-12V
+5V
-7V
R10 3K30
R11 3K30
R12 1K0
R13 1K50
R14 3K30
R15 3K30
R16 3K30
DL1 LED-G0805
DL2 LED-G0805
DL3 LED-G0805
DL4 LED-G0805
DL5 LED-G0805
DL6 LED-G0805
CS1 CSIN0224R2
FIX9 FIX35
FIX10 FIX35
FIX11 FIX35
FIX12 FIX35
FIX13 FIX35
FIX14 FIX35
FIX15 FIX35
FIX16 FIX35
FIX17 FIX35
+12V_CNT
+12V
+5V
-12V
-7V
GND
Nome Progetto: Combiner CCU
Pagina: 1 di 6
Size: A3
Autore: Mauro Ucelli
Data: Friday, March 13, 2015
Codice Progetto: 127
Nome PC in Rete: \\
Revisione: 1.2
Nome Parte: Main interface card
File/Cartella: /
Autorizzazione:
Codice: SL127IN1002

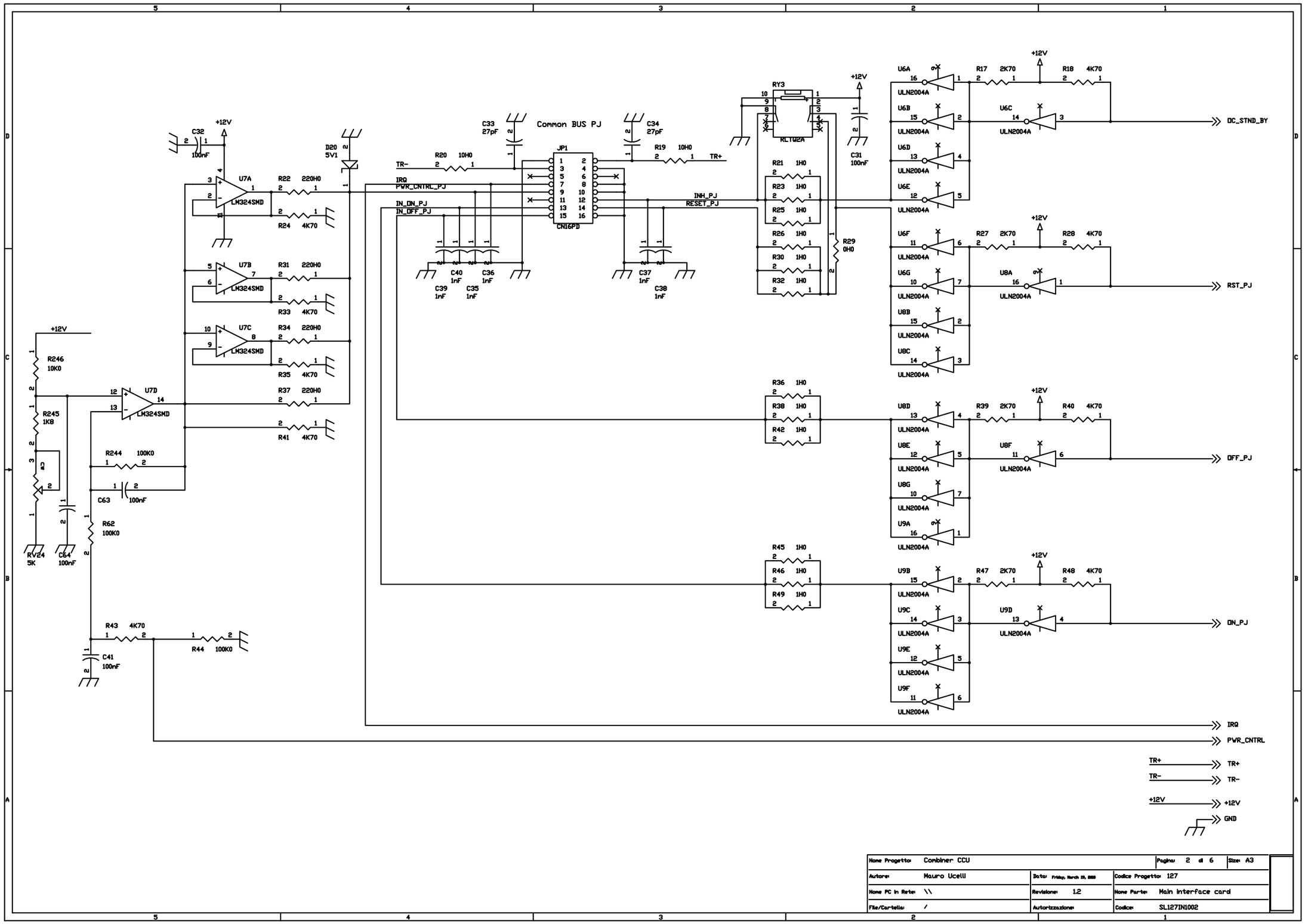
Common BUS PJ
JP1
CN16PD
RY3
RLT02A
TR-
TR+
IRQ
PWR_CNTRL_PJ
IN_ON_PJ
IN_OFF_PJ
INH_PJ
RESET_PJ
U7A
U7B
U7C
U7D
LM324SMD
U6A
U6B
U6C
U6D
U6E
U6F
U6G
U8A
U8B
U8C
U8D
U8E
U8F
U8G
U9A
U9B
U9C
U9D
U9E
U9F
ULN2004A
+12V
DC_STND_BY
RST_PJ
OFF_PJ
ON_PJ
IRQ
PWR_CNTRL
TR+
TR-
+12V
GND
R246 10K0
R245 1K8
RV24 5K
R244 100K0
R62 100K0
R43 4K70
R44 100K0
C63 100nF
C64 100nF
C41 100nF
C32 100nF
C31 100nF
C33 27pF
C34 27pF
C40 1nF
C36 1nF
C39 1nF
C35 1nF
C37 1nF
C38 1nF
D20 5V1
R20 10H0
R19 10H0
R21 1H0
R23 1H0
R25 1H0
R26 1H0
R30 1H0
R32 1H0
R29 0H0
R36 1H0
R38 1H0
R42 1H0
R45 1H0
R46 1H0
R49 1H0
R22 220H0
R24 4K70
R31 220H0
R33 4K70
R34 220H0
R35 4K70
R37 220H0
R41 4K70
R17 2K70
R18 4K70
R27 2K70
R28 4K70
R39 2K70
R40 4K70
R47 2K70
R48 4K70
None Progetto: Combiner CCU
Pagina: 2 di 6
Size: A3
Autore: Mauro Ucelli
Data: Friday, March 29, 2013
Codice Progetto: 127
None PC in Rete: \\
Revisione: 1.2
None Parte: Main interface card
File/Cartella: /
Autorizzazione:
Codice: SL127IN1002

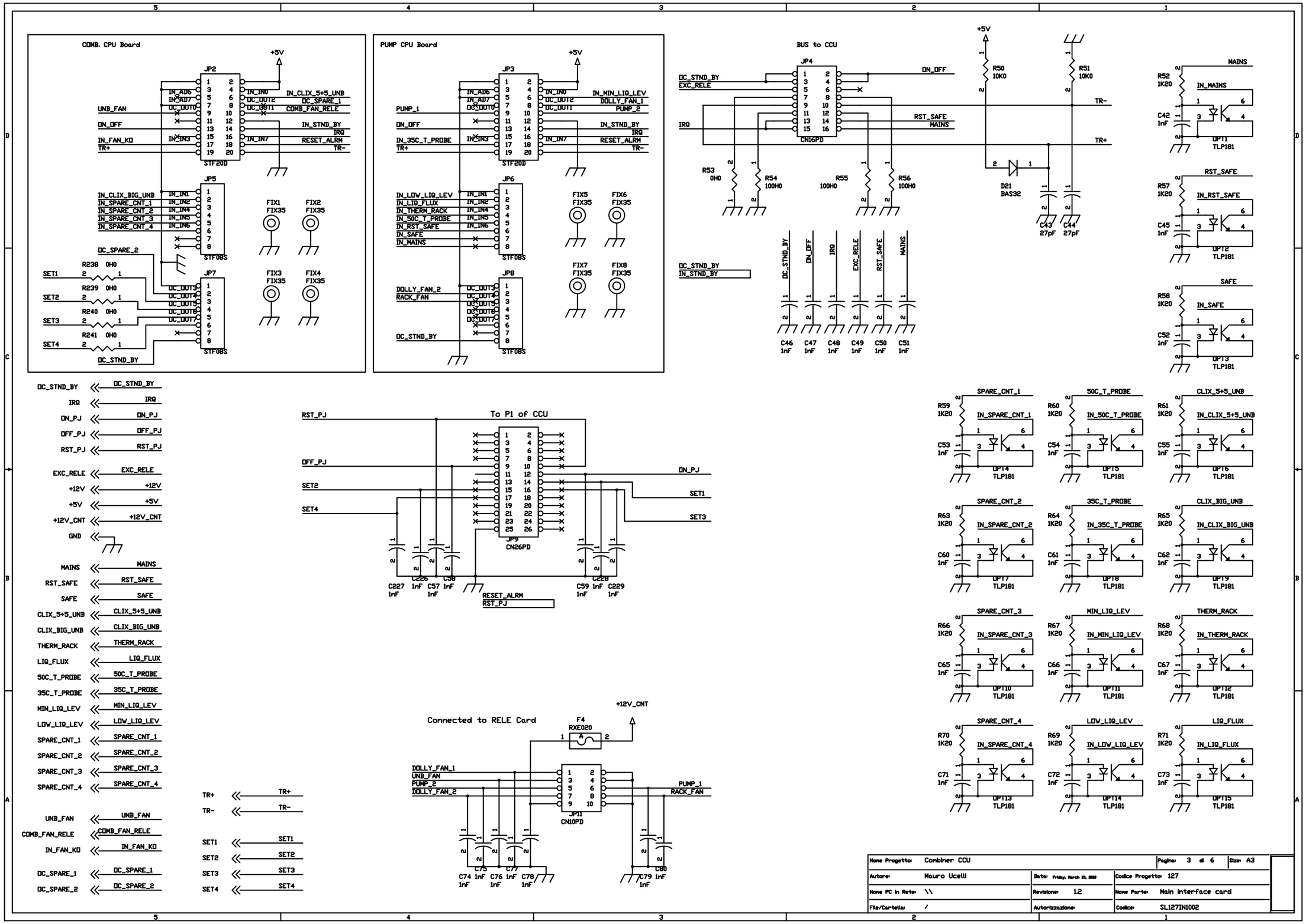
COMB. CPU Board
PUMP CPU Board
BUS to CCU
To P1 of CCU
Connected to RELE Card
MAINS
RST_SAFE
SAFE
SPARE_CNT_1
50C_T_PROBE
CLIX_5+5_UNB
SPARE_CNT_2
35C_T_PROBE
CLIX_BIG_UNB
SPARE_CNT_3
MIN_LIQ_LEV
THERM_RACK
SPARE_CNT_4
LOW_LIQ_LEV
LIQ_FLUX
Name Progetto: Combiner CCU
Pagina: 3 di 6
Size: A3
Autore: Mauro Ucelli
Data: Friday, March 20, 2015
Codice Progetto: 127
Name PC in Rete: \\
Revisione: 1.2
Name Parte: Main interface card
File/Cartella: /
Autorizzazione:
Codice: SL127IN1002

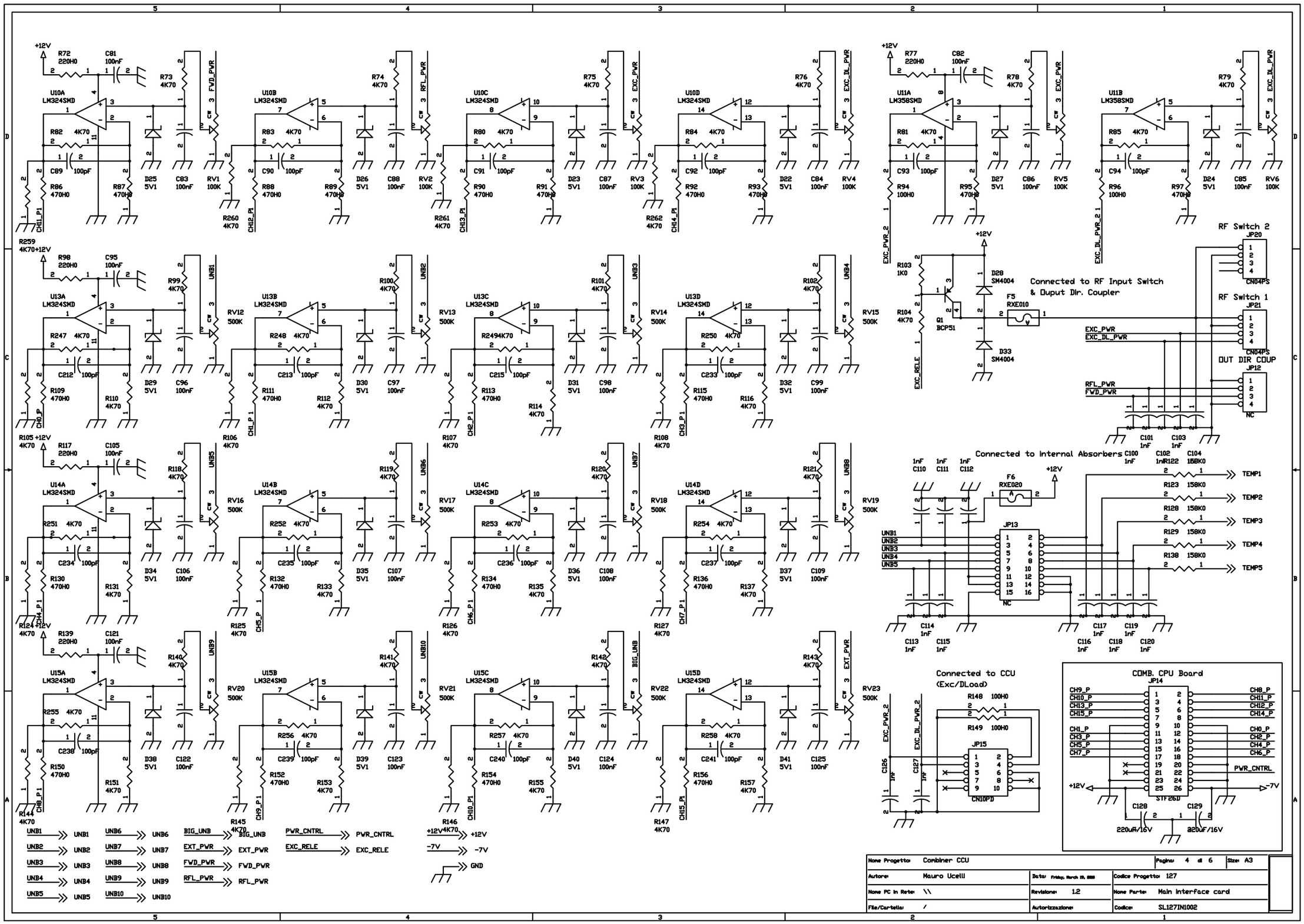
+12V
U10A LM324SMD
U10B LM324SMD
U10C LM324SMD
U10D LM324SMD
U11A LM358SMD
U11B LM358SMD
FWD_PWR
RFL_PWR
EXC_PWR
EXC_DL_PWR
U13A LM324SMD
U13B LM324SMD
U13C LM324SMD
U13D LM324SMD
U14A LM324SMD
U14B LM324SMD
U14C LM324SMD
U14D LM324SMD
U15A LM324SMD
U15B LM324SMD
U15C LM324SMD
U15D LM324SMD
BIG_UNB
EXT_PWR
PWR_CNTRL
EXC_RELE
+12V
-7V
GND
UNB1
UNB2
UNB3
UNB4
UNB5
UNB6
UNB7
UNB8
UNB9
UNB10
Connected to RF Input Switch
& Ouput Dir. Coupler
RF Switch 2
RF Switch 1
OUT DIR COUP
Connected to Internal Absorbers
TEMP1
TEMP2
TEMP3
TEMP4
TEMP5
Connected to CCU
(Exc/DLoad)
COMB. CPU Board
PWR_CNTRL
Nome Progetto: Combiner CCU
Pagina: 4 di 6
Size: A3
Autore: Mauro Ucelli
Data: Friday, March 13, 2015
Codice Progetto: 127
Nome PC in Rete: \\
Revisione: 1.2
Nome Parte: Main interface card
File/Cartella: /
Autorizzazione:
Codice: SL127IN1002

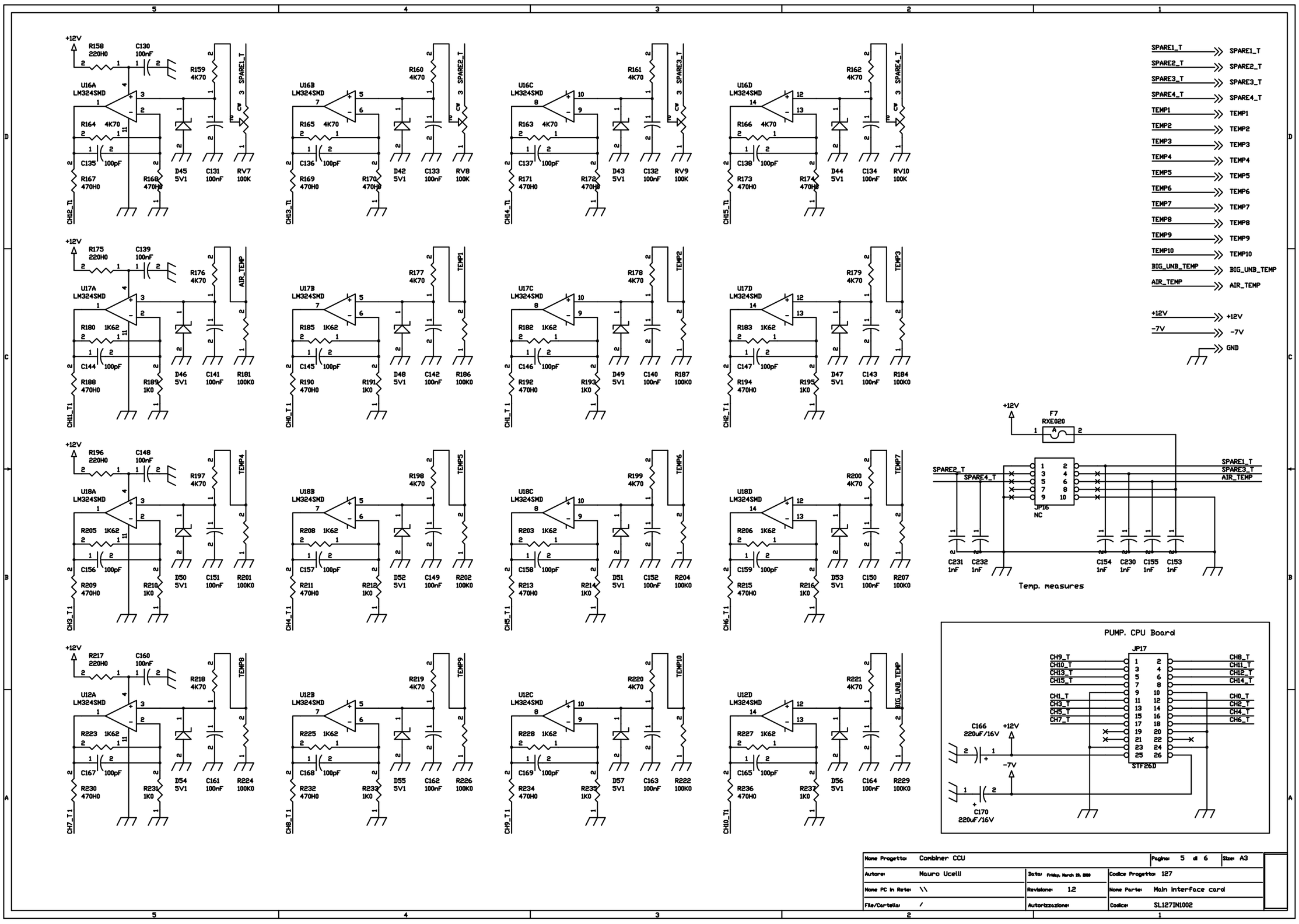
+12V
R158 220H0
C130 100nF
U16A LM324SMD
R159 4K70
SPARE1_T
R164 4K70
C135 100pF
R167 470H0
R168 470H0
D45 5V1
C131 100nF
RV7 100K
CH2_T1
U16B LM324SMD
R160 4K70
SPARE2_T
R165 4K70
C136 100pF
R169 470H0
R170 470H0
D42 5V1
C133 100nF
RV8 100K
CH3_T1
U16C LM324SMD
R161 4K70
SPARE3_T
R163 4K70
C137 100pF
R171 470H0
R172 470H0
D43 5V1
C132 100nF
RV9 100K
CH4_T1
U16D LM324SMD
R162 4K70
SPARE4_T
R166 4K70
C138 100pF
R173 470H0
R174 470H0
D44 5V1
C134 100nF
RV10 100K
CH5_T1
R175 220H0
C139 100nF
U17A LM324SMD
R176 4K70
AIR_TEMP
R180 1K62
C144 100pF
R188 470H0
R189 1K0
D46 5V1
C141 100nF
R181 100K0
CH1L_T1
U17B LM324SMD
R177 4K70
TEMP1
R185 1K62
C145 100pF
R190 470H0
R191 1K0
D48 5V1
C142 100nF
R186 100K0
CH0_T1
U17C LM324SMD
R178 4K70
TEMP2
R182 1K62
C146 100pF
R192 470H0
R193 1K0
D49 5V1
C140 100nF
R187 100K0
CH1_T1
U17D LM324SMD
R179 4K70
TEMP3
R183 1K62
C147 100pF
R194 470H0
R195 1K0
D47 5V1
C143 100nF
R184 100K0
CH2_T1
R196 220H0
C148 100nF
U18A LM324SMD
R197 4K70
TEMP4
R205 1K62
C156 100pF
R209 470H0
R210 1K0
D50 5V1
C151 100nF
R201 100K0
CH3_T1
U18B LM324SMD
R198 4K70
TEMP5
R208 1K62
C157 100pF
R211 470H0
R212 1K0
D52 5V1
C149 100nF
R202 100K0
CH4_T1
U18C LM324SMD
R199 4K70
TEMP6
R203 1K62
C158 100pF
R213 470H0
R214 1K0
D51 5V1
C152 100nF
R204 100K0
CH5_T1
U18D LM324SMD
R200 4K70
TEMP7
R206 1K62
C159 100pF
R215 470H0
R216 1K0
D53 5V1
C150 100nF
R207 100K0
CH6_T1
R217 220H0
C160 100nF
U12A LM324SMD
R218 4K70
TEMP8
R223 1K62
C167 100pF
R230 470H0
R231 1K0
D54 5V1
C161 100nF
R224 100K0
CH7_T1
U12B LM324SMD
R219 4K70
TEMP9
R225 1K62
C168 100pF
R232 470H0
R233 1K0
D55 5V1
C162 100nF
R226 100K0
CH8_T1
U12C LM324SMD
R220 4K70
TEMP10
R228 1K62
C169 100pF
R234 470H0
R235 1K0
D57 5V1
C163 100nF
R222 100K0
CH9_T1
U12D LM324SMD
R221 4K70
BIG_UNB_TEMP
R227 1K62
C165 100pF
R236 470H0
R237 1K0
D56 5V1
C164 100nF
R229 100K0
CH10_T1
SPARE1_T
SPARE2_T
SPARE3_T
SPARE4_T
TEMP1
TEMP2
TEMP3
TEMP4
TEMP5
TEMP6
TEMP7
TEMP8
TEMP9
TEMP10
BIG_UNB_TEMP
AIR_TEMP
+12V
-7V
GND
F7 RXE020
JP16 NC
C231 1nF
C232 1nF
C154 1nF
C230 1nF
C155 1nF
C153 1nF
Temp. measures
PUMP. CPU Board
JP17
STF26D
CH9_T
CH10_T
CH13_T
CH15_T
CH1_T
CH3_T
CH5_T
CH7_T
CH8_T
CH11_T
CH12_T
CH14_T
CH0_T
CH2_T
CH4_T
CH6_T
C166 220uF/16V
C170 220uF/16V
Nome Progetto: Combiner CCU
Pagina: 5 di 6
Size: A3
Autore: Mauro Ucelli
Data: Friday, March 15, 2013
Codice Progetto: 127
Nome PC in Rete: \\
Revisione: 1.2
Nome Parte: Main interface card
File/Cartella: /
Autorizzazione:
Codice: SL127IN1002

Connected to Interface for external connections

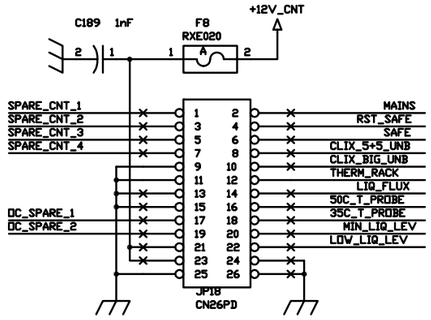

Connected to Interface for external connections

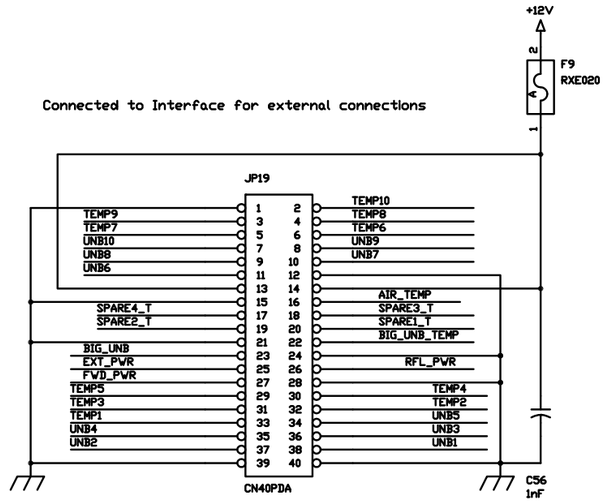

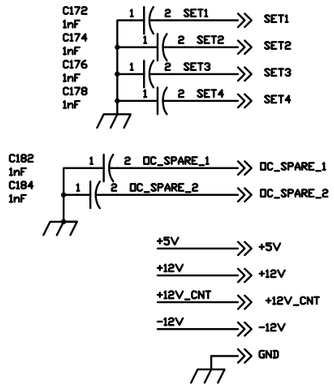

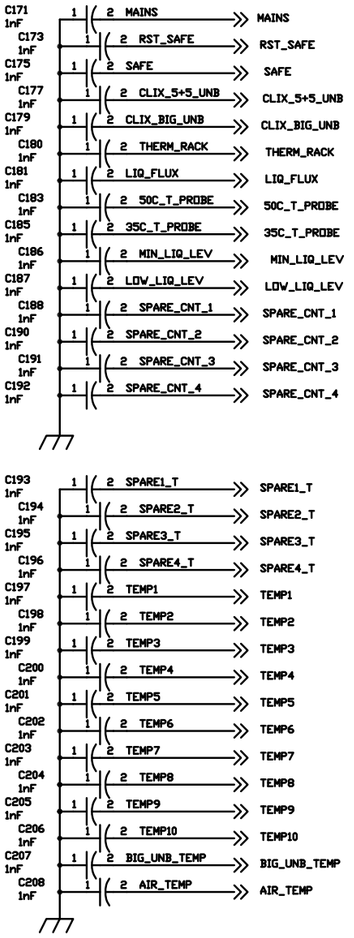

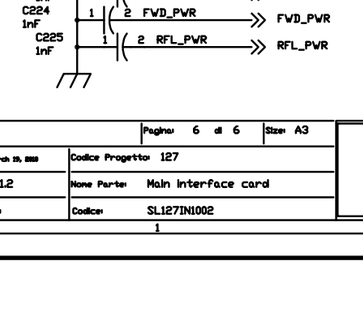

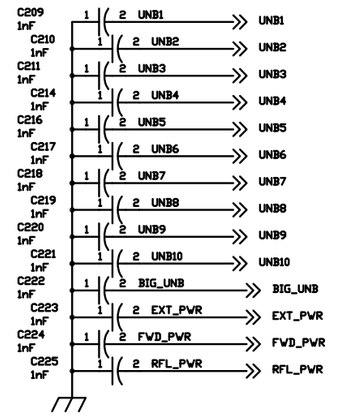

Nome Progetto:	Combiner CCU			Pagina: 6 di 6	Size: A3
Autore:	Mauro Ucelli	Data: Friday, March 29, 2013		Codice Progetto: 127	
Nome PC in Rete:	\\	Revisione: 1.2		Nome Parte: Main interface card	
File/Cartella:	/	Autorizzazione:		Codice: SL127IN1002	

Main interface card Revised: March 19, 2010
SL127IN1002 Revision: 1.2

Combiner CCU
127

Mauro Ucelli

Item	Qty	Reference	Part	Description
1	2	CN1,CN3	CN06MRO	Conn. Phoenix MSTB 90° p. 5mm 6 pin
2	1	CN2	CN04MRO	Conn. Phoenix MSTB 90° p. 5mm 4 pin
3	1	CS1	CSIN0224R2	Circuito stampato
4	2	C1,C6	NC	Cond. Poli. p 5/7.5/10mm
5	2	C2,C7	4,7nF	Cond. SMD 0805
6	6	C3,C4,C5,C17,C18,C27	1000uF/63V/105°C	Cond. Elettr. Dia 16 105°C
7	121	C8,C9,C10,C35,C36,C37, C38,C39,C40,C42,C45,C46, C47,C48,C49,C50,C51,C52, C53,C54,C55,C56,C57,C58, C59,C60,C61,C62,C65,C66, C67,C71,C72,C73,C74,C75, C76,C77,C78,C79,C80,C100, C101,C102,C103,C104,C110, C111,C112,C113,C114,C115, C116,C117,C118,C119,C120, C126,C127,C153,C154,C155, C171,C172,C173,C174,C175, C176,C177,C178,C179,C180, C181,C182,C183,C184,C185, C186,C187,C188,C189,C190, C191,C192,C193,C194,C195, C196,C197,C198,C199,C200, C201,C202,C203,C204,C205, C206,C207,C208,C209,C210, C211,C214,C216,C217,C218, C219,C220,C221,C222,C223, C224,C225,C226,C227,C228, C229,C230,C231,C232	1nF	Cond. SMD 0805
8	5	C11,C12,C19,C22,C28	47uF/35V	Cond. Elett. SMD d. 6.3mm
9	52	C13,C20,C23,C29,C31,C32, C41,C63,C64,C81,C82,C83, C84,C85,C86,C87,C88,C95, C96,C97,C98,C99,C105, C106,C107,C108,C109,C121, C122,C123,C124,C125,C130, C131,C132,C133,C134,C139, C140,C141,C142,C143,C148, C149,C150,C151,C152,C160, C161,C162,C163,C164	100nF	Cond. SMD 0805
10	8	C14,C21,C24,C30,C128, C129,C166,C170	220uF/16V	Cond. Elett. SMD d. 6.3mm
11	4	C15,C16,C25,C26	680pF	Cond. SMD 1212 HQ
12	4	C33,C34,C43,C44	27pF	Cond. SMD 0805
13	34	C89,C90,C91,C92,C93,C94, C135,C136,C137,C138,C144, C145,C146,C147,C156,C157, C158,C159,C165,C167,C168, C169,C212,C213,C215,C233, C234,C235,C236,C237,C238, C239,C240,C241	100pF	Cond. SMD 0805
14	6	DL1,DL2,DL3,DL4,DL5,DL6	LED-G0805	LED Verde SMD 0805
15	2	D1,D6	NC	MELF SMD Diode
16	3	D2,D9,D11	NC	Doppio diodo shottky SMD
17	4	D3,D5,D10,D12	NC	Doppio diodo shottky DMS D2PAK
18	1	D4	12CWQ06FN	Doppio diodo shottky SMD
19	2	D7,D21	BAS32	MINIMELF SMD Diode
20	37	D8,D19,D20,D22,D23,D24, D25,D26,D27,D29,D30,D31, D32,D34,D35,D36,D37,D38, D39,D40,D41,D42,D43,D44, D45,D46,D47,D48,D49,D50, D51,D52,D53,D54,D55,D56, D57	5V1	MINIMELF SMD Zener Diode
21	8	D13,D14,D15,D16,D17,D18, D28,D33	SM4004	MELF SMD Diode
22	17	FIX1,FIX2,FIX3,FIX4,FIX5, FIX6,FIX7,FIX8,FIX9, FIX10,FIX11,FIX12,FIX13, FIX14,FIX15,FIX16,FIX17	FIX35	Foro fissaggio 3.5mm
23	3	F1,F2,F3	RXE110	Fusibile autorip. 13mm
24	5	F4,F6,F7,F8,F9	RXE020	Fusibile autorip. RXE p5mm
25	1	F5	RXE010	Fusibile autorip. RXE p5mm
26	2	JP1,JP4	CN16PD	Conn.M.C.S.Dritto 16P alette
27	2	JP2,JP3	STF20D	Strip femmina 10+10 pin
28	4	JP5,JP6,JP7,JP8	STF08S	Strip femmina 8 pin
29	2	JP9,JP18	CN26PD	Connettore 26 poli Flat cs
30	2	JP11,JP15	CN10PD	Connettore 10 poli Flat cs
31	1	JP12	NC	Connettore 4 poli Mascon
32	1	JP13	NC	Conn.M.C.S.Dritto 16P alette
33	2	JP14,JP17	STF26D	Strip femmina 13+13 pin
34	1	JP16	NC	Connettore 10 poli Flat cs
35	1	JP19	CN40PDA	Conn.M.C.S.Dritto 40P alette
36	2	JP20,JP21	CN04PS	Connettore 4 poli Mascon
37	15	OPT1,OPT2,OPT3,OPT4,OPT5, OPT6,OPT7,OPT8,OPT9, OPT10,OPT11,OPT12,OPT13, OPT14,OPT15	TLP181	Optoisolatore SMD SO6
38	1	PF1	PFS520	Portafusibile 5x20
39	1	Q1	BCP51	Trans. PNP SOT223
40	10	RV1,RV2,RV3,RV4,RV5,RV6, RV7,RV8,RV9,RV10	100K	Trimmer Rg V 3269W SMD
41	12	RV12,RV13,RV14,RV15,RV16, RV17,RV18,RV19,RV20,RV21, RV22,RV23	500K	Trimmer Rg V 3296W
42	1	RV24	5K	Trimmer Rg V 3269W SMD
43	2	RY1,RY2	NC	Rele' 30A NO
44	1	RY3	RLTQ2A	Rele' TQ2
45	2	R1,R2	NC	Res. SMD 2512 1%
46	100	R3,R4,R5,R6,R8,R9,R18, R24,R28,R33,R35,R40,R41, R43,R48,R73,R74,R75,R76, R78,R79,R80,R81,R82,R83, R84,R85,R99,R100,R101, R102,R104,R105,R106,R107, R108,R110,R112,R114,R116, R118,R119,R120,R121,R124, R125,R126,R127,R131,R133, R135,R137,R140,R141,R142, R143,R144,R145,R146,R147, R151,R153,R155,R157,R159, R160,R161,R162,R163,R164, R165,R166,R176,R177,R178, R179,R197,R198,R199,R200, R218,R219,R220,R221,R247, R248,R249,R250,R251,R252, R253,R254,R255,R256,R257, R258,R259,R260,R261,R262	4K70	Res. SMD 0805 1%
47	1	R7	22K0	Res. SMD 0805 1%
48	5	R10,R11,R14,R15,R16	3K30	Res. SMD 0805 1%
49	14	R12,R103,R189,R191,R193, R195,R210,R212,R214,R216, R231,R233,R235,R237	1K0	Res. SMD 0805 1%
50	1	R13	1K50	Res. SMD 0805 1%
51	4	R17,R27,R39,R47	2K70	Res. SMD 0805 1%
52	2	R19,R20	10H0	Res. SMD 0805 1%
53	12	R21,R23,R25,R26,R30,R32, R36,R38,R42,R45,R46,R49	1H0	Res. SMD 0805 1%
54	13	R22,R31,R34,R37,R72,R77, R98,R117,R139,R158,R175, R196,R217	220H0	Res. SMD 0805 1%
55	6	R29,R53,R238,R239,R240, R241	0H0	Res. SMD 0805 1%
56	15	R44,R62,R181,R184,R186, R187,R201,R202,R204,R207, R222,R224,R226,R229,R244	100K0	Res. SMD 0805 1%
57	3	R50,R51,R246	10K0	Res. SMD 0805 1%
58	15	R52,R57,R58,R59,R60,R61, R63,R64,R65,R66,R67,R68, R69,R70,R71	1K20	Res. SMD 0805 1%
59	3	R54,R55,R56	100H0	Res. SMD 2512 1%
60	42	R86,R87,R88,R89,R90,R91, R92,R93,R95,R97,R109, R111,R113,R115,R130,R132, R134,R136,R150,R152,R154, R156,R167,R168,R169,R170, R171,R172,R173,R174,R188, R190,R192,R194,R209,R211, R213,R215,R230,R232,R234, R236	470H0	Res. SMD 0805 1%
61	4	R94,R96,R148,R149	100H0	Res. SMD 0805 1%
62	5	R122,R123,R128,R129,R138	158K0	Res. SMD 0805 1%
63	12	R180,R182,R183,R185,R203, R205,R206,R208,R223,R225, R227,R228	1K62	Res. SMD 0805 1%
64	2	R242,R243	1H20	Res. 2W
65	1	R245	1K80	Res. SMD 0805 1%
66	4	U1,U6,U8,U9	ULN2004A	Seven Inv. Buffer OC
67	2	U2,U3	LM7812	Stabilizzatore TO220
68	1	U4	LM7805	Stabilizzatore TO220
69	1	U5	LM7912F	Stabilizzatore TO220F Isolato
70	9	U7,U10,U12,U13,U14,U15, U16,U17,U18	LM324SMD	Quad Op. SMD SO14
71	1	U11	LM358SMD	Dual Op. SMD SO8

6.3.1 Foldback voltage calibration

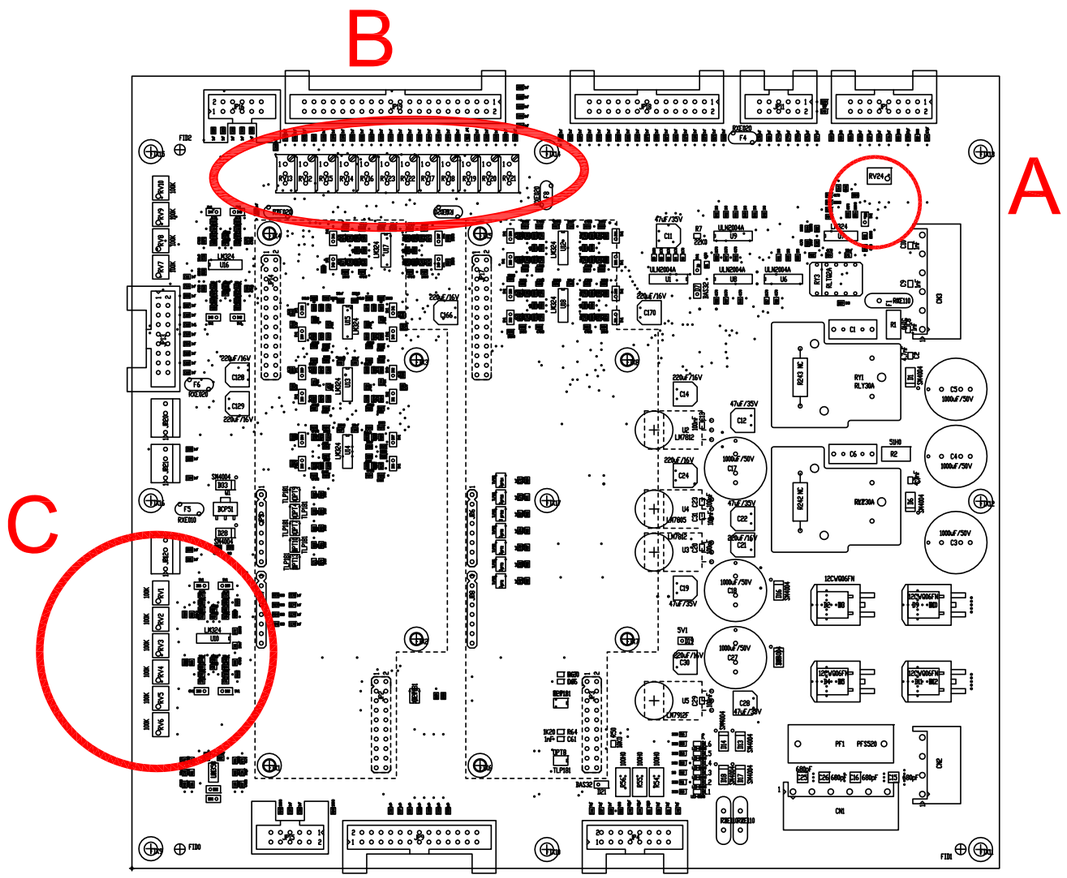

The CCU generates a control voltage that works on the modules to obtain output from the transmitter, the power set in the menu settings (Automatic Gain Control - AGC).Only if you change or CCU during the first switch is set to this voltage, to perform this calibration obtain a tester and go on the diode D20 between the cathode and ground and with the RV24 trimmer adjust the voltage to 4.3 volts

Note: The CCU should be in a position OFF

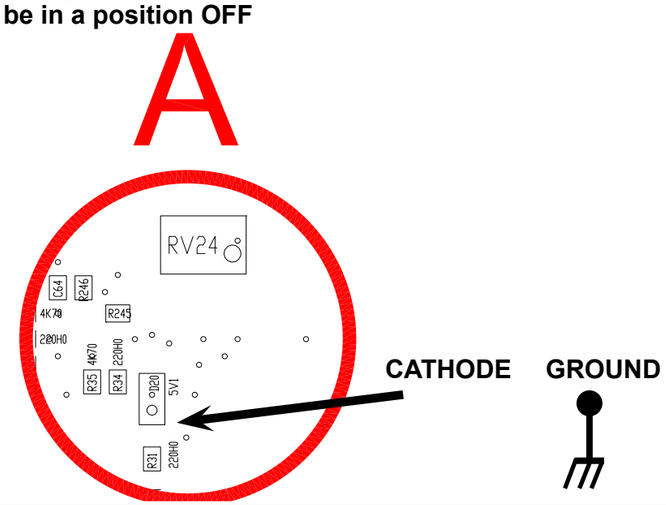

If you wish to disable this check must make a bridge in the back of the CCU on the green terminal, indicated in the figure, between pins 2 and 5

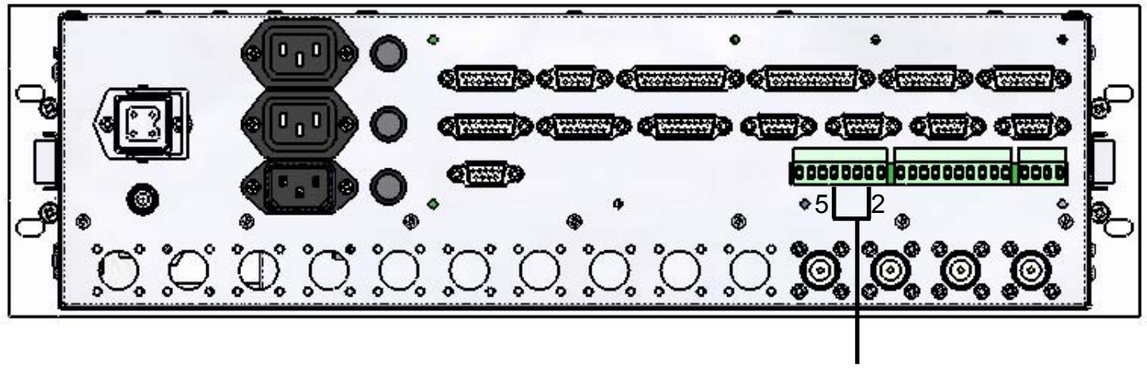

Bridging pins 2 and 5

Note: Pin 1 is always to the right of each green terminal

6.3.2 Calibration reading power

Trimmer	Function
RV1	FWD Power Output
RV2	RFL Power Output
RV3	PTX Power Antenna (menù combiner)
RV4	Power PTX on the dummy load (menù combiner)
RV5	PTX Power Antenna (menù exciter)
RV6	Power PTX on the dummy load (menù exciter)

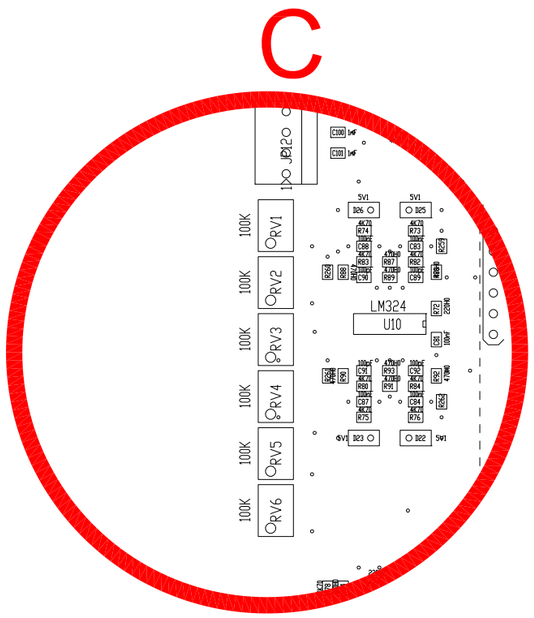

Trimmer	Function
RV12	Unbalanced power LOAD 1
RV13	Unbalanced power LOAD 2 (only for transmitter TX15000U-KLC/TX20000U-KLC)
RV14	Unbalanced power LOAD 3 (only for transmitter TX15000U-KLC)
RV22	Unbalanced power BIG LOAD (only for transmitter TX20000U-KLC)

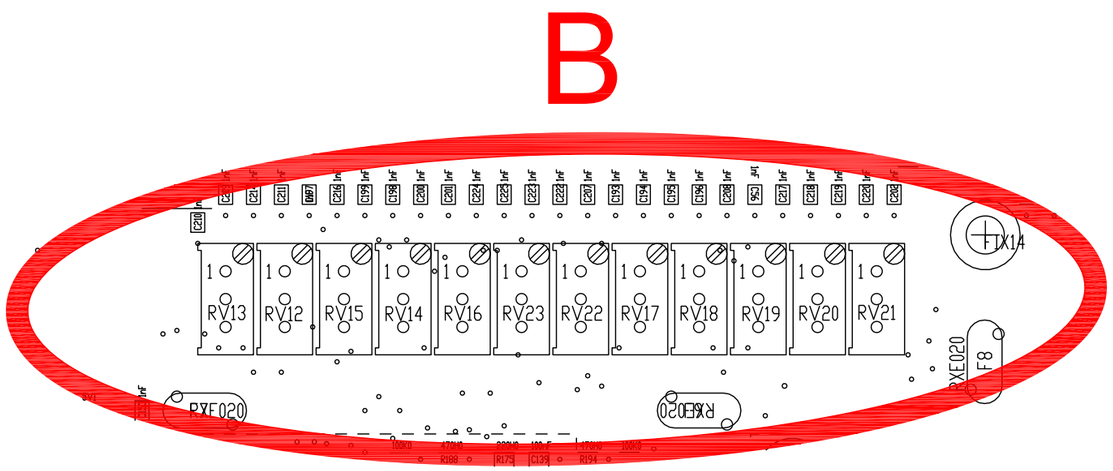

6.3.3 Main card connections

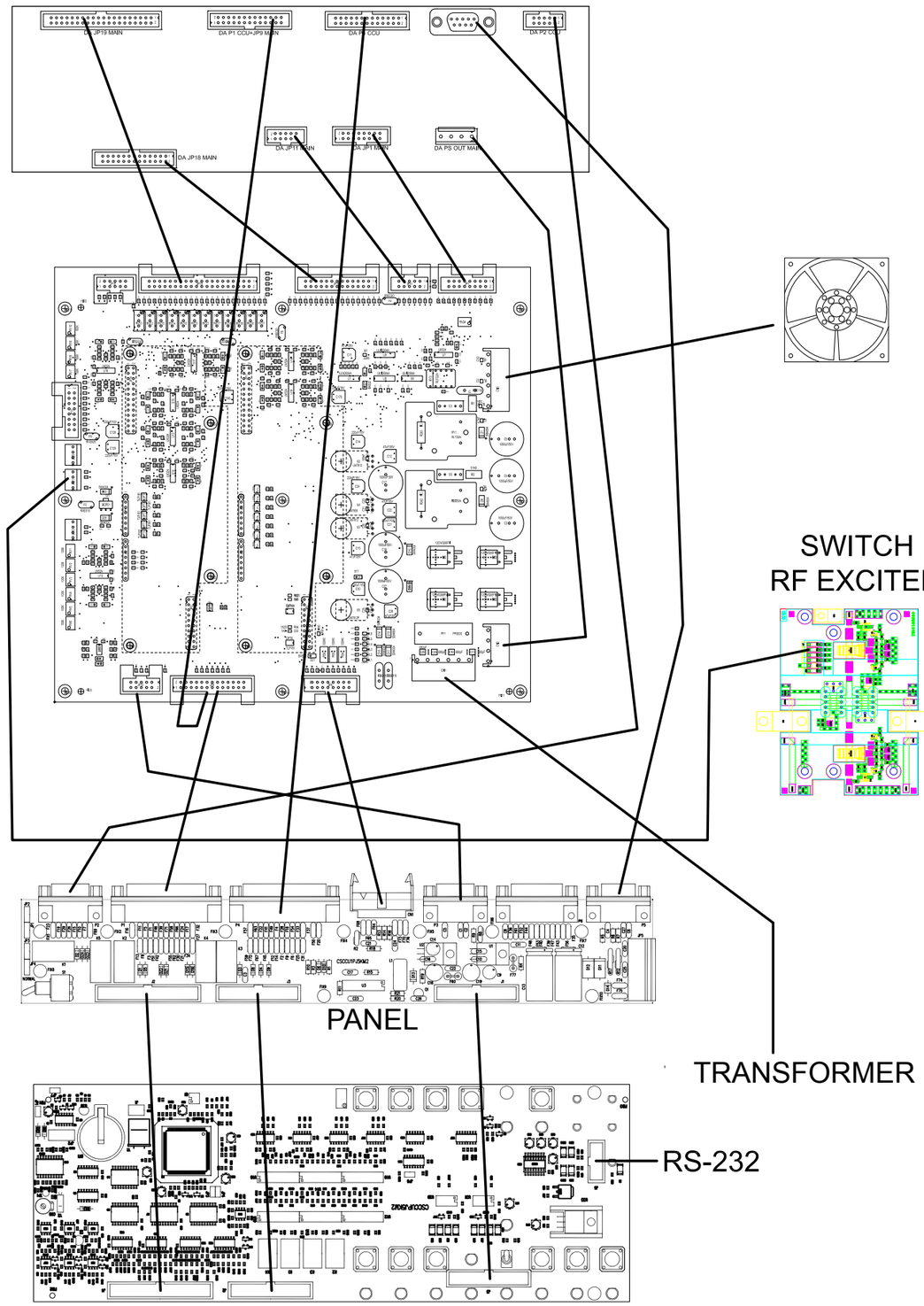

6.4 External Con. interface card (SL127IN2001)

EXTERNAL VIEW

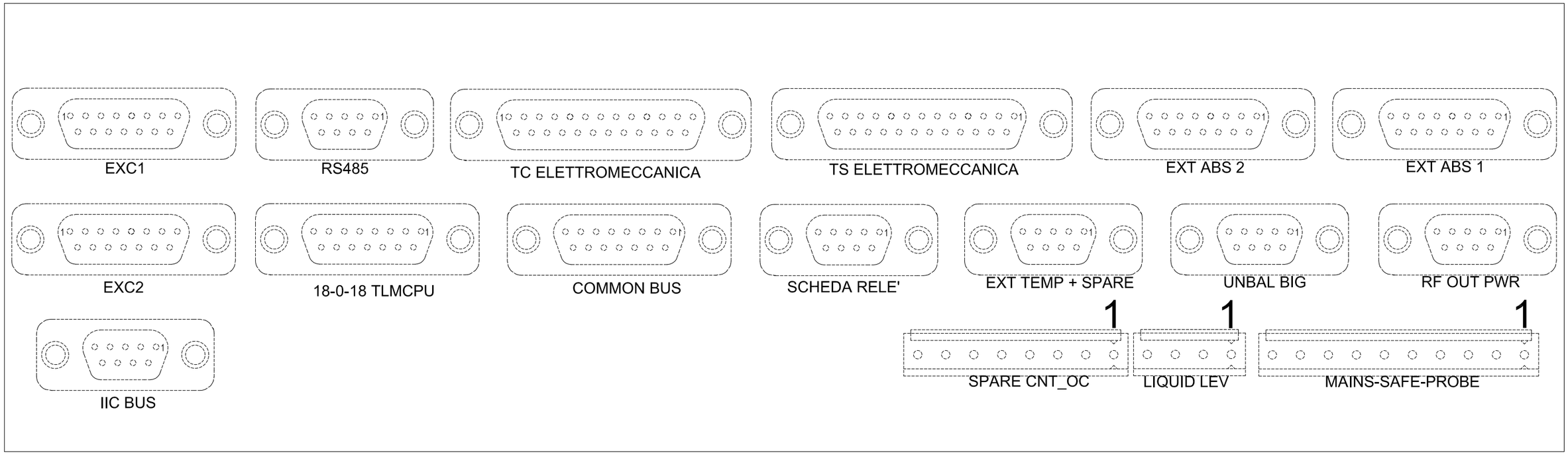

Spare CNT_OC

Pin	Function
1	GND
2	+12 Vcc
3	/
4	/
5	Foldback inhibit
6	/
7	/
8	/

Liquid Level

Pin	Function
1	GND
2	+12 Vcc
3	Liquid Low
4	Liquid Min

Mains-Safe-Probe

Pin	Function
1	GND
2	+12 Vcc
3	GND
4	Thermostat 35°
5	Thermostat 50°
6	Flux control
7	Thermal rack
8	Safety
9	Pressure switch
10	Mains

INSIDE VIEW

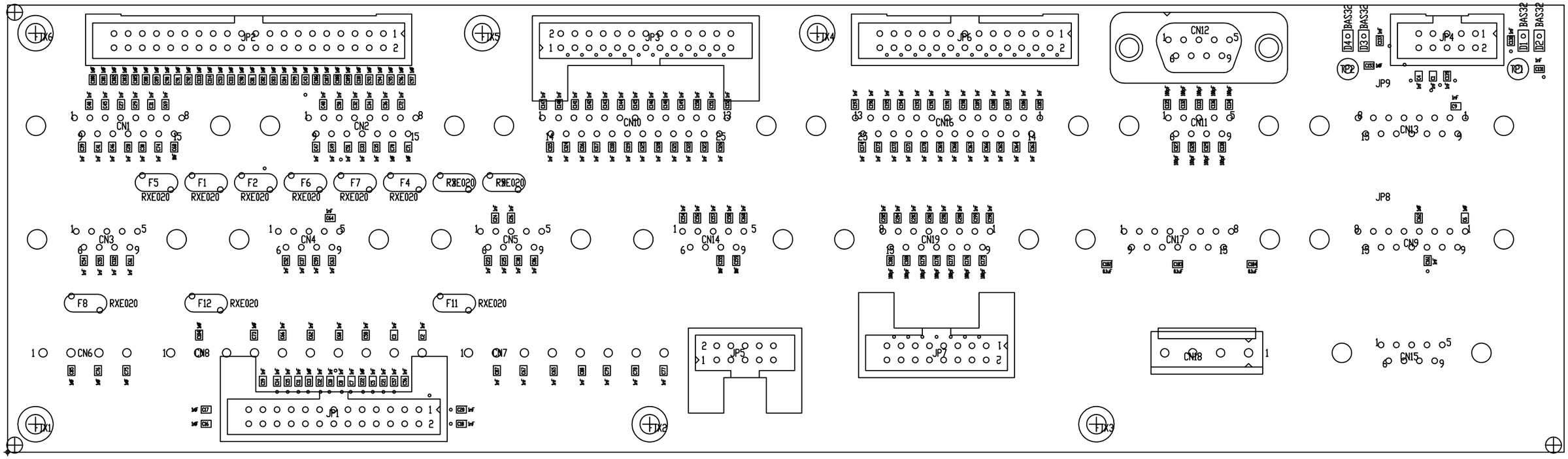

RILASCIO: 30/1/09			DIS. S.POL. CTR. A2 LATO PIANO DI MONTAGGIO VISTA LATO COMPONENTI
REV:			
DIM.SCHEDA: VEDIQUOTE TRATT.: STANDARD COSTRUTTORE	DENOMINAZIONE EXT CON INTERFACE CARD		
MAT.: FR4-74 1.6mm Cu35um VISTA POSITIVA	CODICE CSIN0225R1	RVR ELETTRONICA S.P.A	SCALA 1:1

Connected to Main Interface Card

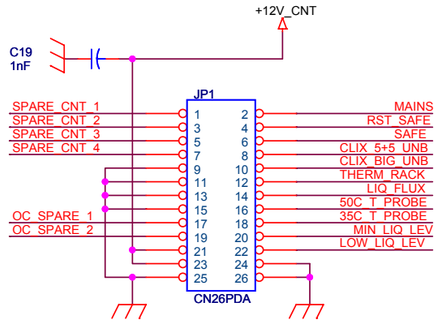

Connected to Main Interface Card

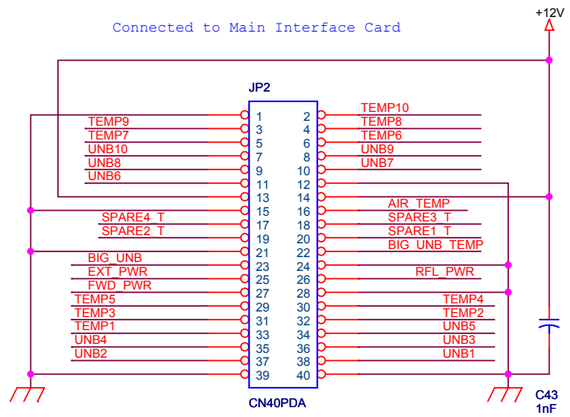

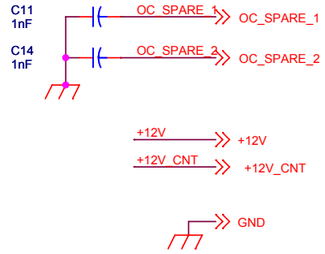

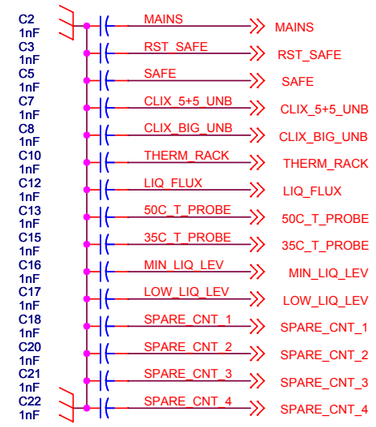

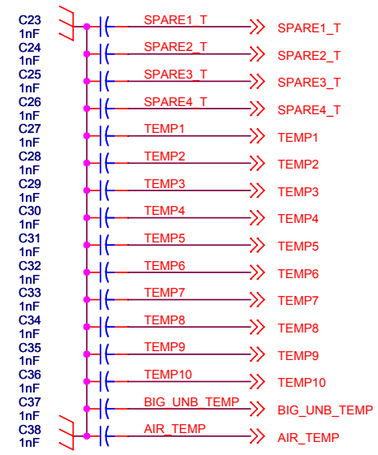

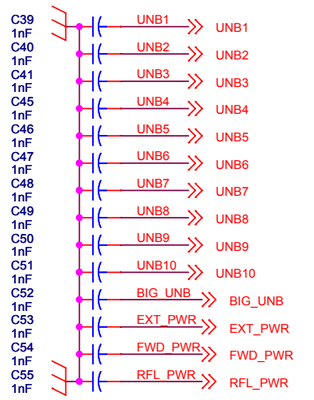

Nome Progetto: Combiner CCU			**Pagina:** 1 di 3 **Size:** A3
Autore: Mauro Ucelli	**Data:** Monday, March 23, 2009	**Codice Progetto:** 127	
Nome PC in Rete: \\	**Revisione:** 1.0	**Nome Parte:** External Con. interface card	
File/Cartella: /	**Autorizzazione:**	**Codice:** SL127IN2001	

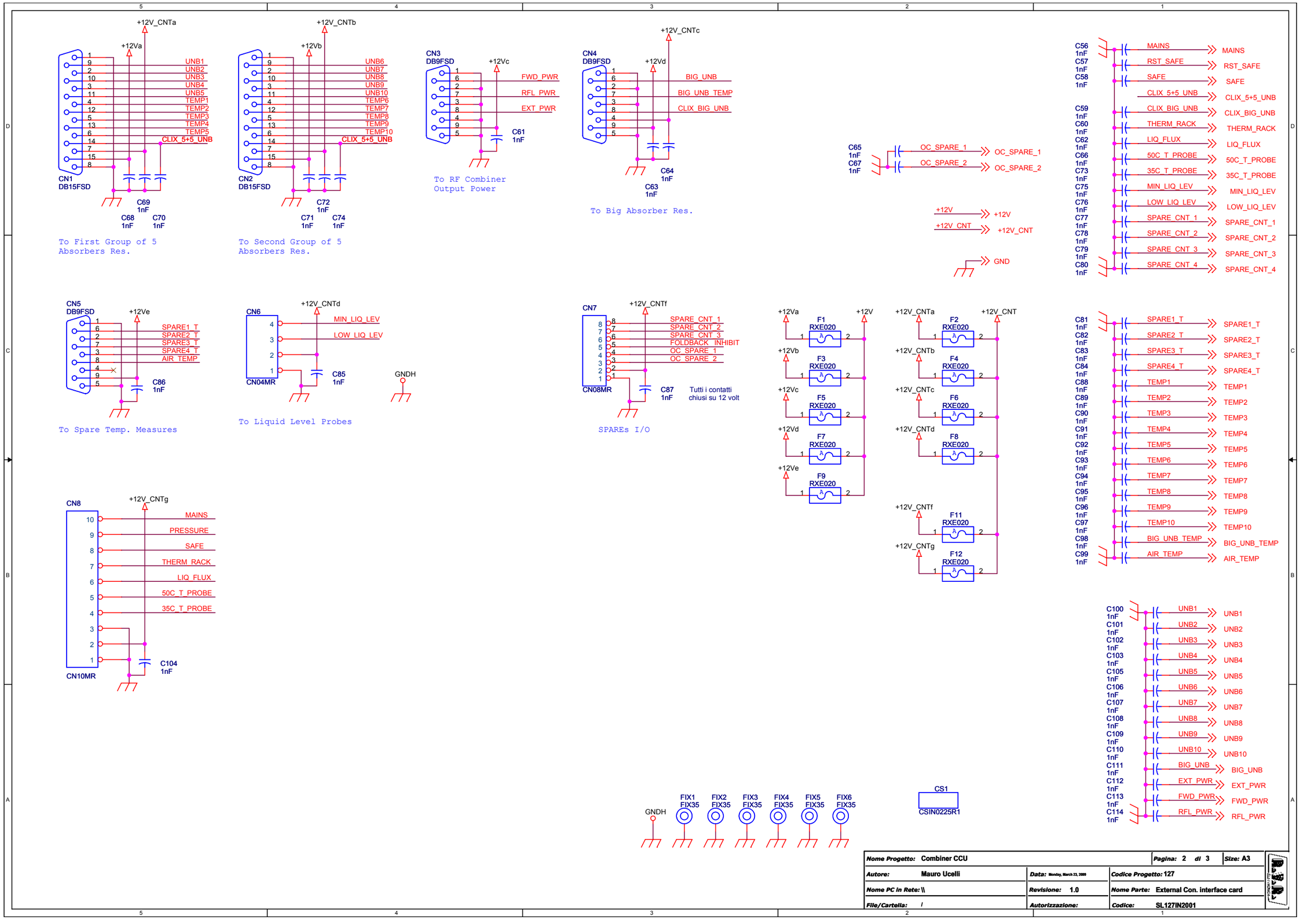
+12V_CNTa
+12Va
CN1
DB15FSD
UNB1
UNB2
UNB3
UNB4
UNB5
TEMP1
TEMP2
TEMP3
TEMP4
TEMP5
CLIX_5+5_UNB
C68 1nF
C69 1nF
C70 1nF
To First Group of 5 Absorbers Res.
+12V_CNTb
+12Vb
CN2
DB15FSD
UNB6
UNB7
UNB8
UNB9
UNB10
TEMP6
TEMP7
TEMP8
TEMP9
TEMP10
CLIX_5+5_UNB
C71 1nF
C72 1nF
C74 1nF
To Second Group of 5 Absorbers Res.
CN3
DB9FSD
+12Vc
FWD_PWR
RFL_PWR
EXT_PWR
C61 1nF
To RF Combiner Output Power
+12V_CNTc
CN4
DB9FSD
+12Vd
BIG_UNB
BIG_UNB_TEMP
CLIX_BIG_UNB
C63 1nF
C64 1nF
To Big Absorber Res.
C65 1nF
C67 1nF
OC_SPARE_1
OC_SPARE_2
+12V
+12V_CNT
GND
C56 1nF
C57 1nF
C58 1nF
C59 1nF
C60 1nF
C62 1nF
C66 1nF
C73 1nF
C75 1nF
C76 1nF
C77 1nF
C78 1nF
C79 1nF
C80 1nF
MAINS
RST_SAFE
SAFE
CLIX_5+5_UNB
CLIX_BIG_UNB
THERM_RACK
LIQ_FLUX
50C_T_PROBE
35C_T_PROBE
MIN_LIQ_LEV
LOW_LIQ_LEV
SPARE_CNT_1
SPARE_CNT_2
SPARE_CNT_3
SPARE_CNT_4
CN5
DB9FSD
+12Ve
SPARE1_T
SPARE2_T
SPARE3_T
SPARE4_T
AIR_TEMP
C86 1nF
To Spare Temp. Measures
CN6
+12V_CNTd
MIN_LIQ_LEV
LOW_LIQ_LEV
CN04MR
C85 1nF
GNDH
To Liquid Level Probes
CN7
+12V_CNTf
SPARE_CNT_1
SPARE_CNT_2
SPARE_CNT_3
FOLDBACK_INHIBIT
OC_SPARE_1
OC_SPARE_2
CN08MR
C87 1nF
Tutti i contatti chiusi su 12 volt
SPAREs I/O
+12Va
+12V
F1 RXE020
+12Vb
F3 RXE020
+12Vc
F5 RXE020
+12Vd
F7 RXE020
+12Ve
F9 RXE020
+12V_CNTa
F2 RXE020
+12V_CNTb
F4 RXE020
+12V_CNTc
F6 RXE020
+12V_CNTd
F8 RXE020
+12V_CNTf
F11 RXE020
+12V_CNTg
F12 RXE020
C81 1nF
C82 1nF
C83 1nF
C84 1nF
C88 1nF
C89 1nF
C90 1nF
C91 1nF
C92 1nF
C93 1nF
C94 1nF
C95 1nF
C96 1nF
C97 1nF
C98 1nF
C99 1nF
SPARE1_T
SPARE2_T
SPARE3_T
SPARE4_T
TEMP1
TEMP2
TEMP3
TEMP4
TEMP5
TEMP6
TEMP7
TEMP8
TEMP9
TEMP10
BIG_UNB_TEMP
AIR_TEMP
CN8
+12V_CNTg
MAINS
PRESSURE
SAFE
THERM_RACK
LIQ_FLUX
50C_T_PROBE
35C_T_PROBE
CN10MR
C104 1nF
GNDH
FIX1 FIX35
FIX2 FIX35
FIX3 FIX35
FIX4 FIX35
FIX5 FIX35
FIX6 FIX35
CS1
CSIN0225R1
C100 1nF
C101 1nF
C102 1nF
C103 1nF
C105 1nF
C106 1nF
C107 1nF
C108 1nF
C109 1nF
C110 1nF
C111 1nF
C112 1nF
C113 1nF
C114 1nF
UNB1
UNB2
UNB3
UNB4
UNB5
UNB6
UNB7
UNB8
UNB9
UNB10
BIG_UNB
EXT_PWR
FWD_PWR
RFL_PWR
Nome Progetto: Combiner CCU
Pagina: 2 di 3
Size: A3
Autore: Mauro Ucelli
Data: Monday, March 23, 2009
Codice Progetto: 127
Nome PC in Rete: \\
Revisione: 1.0
Nome Parte: External Con. interface card
File/Cartella: /
Autorizzazione:
Codice: SL127IN2001

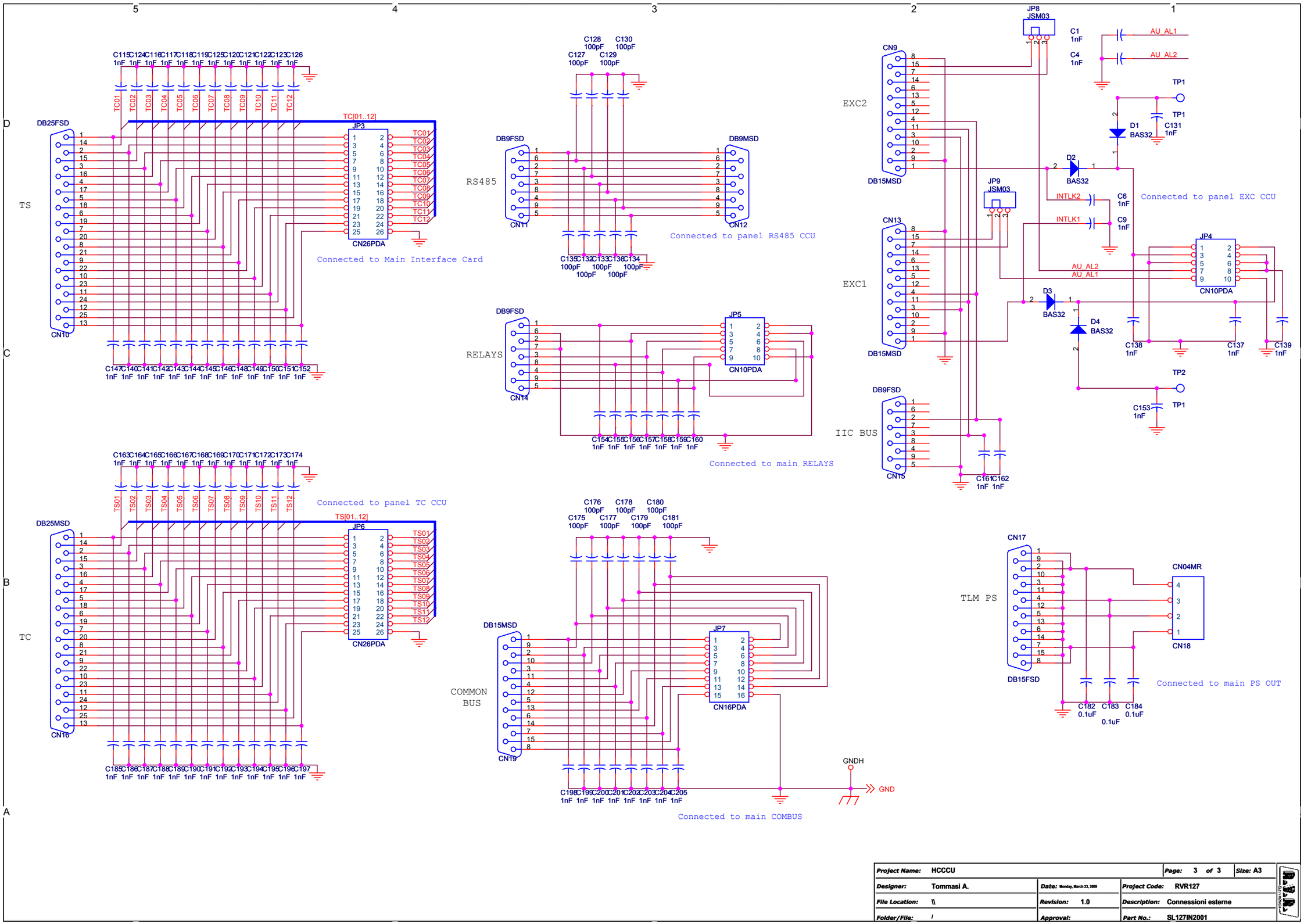

Project Name: HCCCU		Page: 3 of 3	Size: A3
Designer: Tommasi A.	Date: Monday, March 23, 2009	Project Code: RVR127	
File Location: \\	Revision: 1.0	Description: Connessioni esterne	
Folder/File: /	Approval:	Part No.: SL127IN2001	

External Con. interface card Revised: 23/03/2009
SL127IN2001 Revision: 1.0
Combiner CCU
127
Mauro Ucelli

Item	Quantity	Reference	Part	Description
1	3	CN1,CN2,CN17	DB15FSD	Connettore DB15 femm. cs
2	6	CN3,CN4,CN5,CN11,CN14, CN15	DB9FSD	Connettore DB9 femm. cs
3	2	CN6,CN18	CN04MR	Conn. Phoenix MSTB p. 5mm 4 pin
4	1	CN7	CN08MR	Conn. Phoenix MSTB p. 5mm 8 pin
5	1	CN8	CN10MR	Conn. Phoenix MSTB p. 5mm 10 pin
6	3	CN9,CN13,CN19	DB15MSD	Connettore DB15 mas. cs
7	1	CN10	DB25FSD	Connettore DB25 femm. cs
8	1	CN12	DB9MSD	Connettore DB9 mas. cs
9	1	CN16	DB25MSD	Connettore DB25 mas. cs
10	1	CS1	CSIN0225R1	Circuito stampato
11	184	C1,C2,C3,C4,C5,C6,C7,C8, C9,C10,C11,C12,C13,C14, C15,C16,C17,C18,C19,C20, C21,C22,C23,C24,C25,C26, C27,C28,C29,C30,C31,C32, C33,C34,C35,C36,C37,C38, C39,C40,C41,C43,C45,C46, C47,C48,C49,C50,C51,C52, C53,C54,C55,C56,C57,C58, C59,C60,C61,C62,C63,C64, C65,C66,C67,C68,C69,C70, C71,C72,C73,C74,C75,C76, C77,C78,C79,C80,C81,C82, C83,C84,C85,C86,C87,C88, C89,C90,C91,C92,C93,C94, C95,C96,C97,C98,C99,C100, C101,C102,C103,C104,C105, C106,C107,C108,C109,C110, C111,C112,C113,C114,C115, C116,C117,C118,C119,C120, C121,C122,C123,C124,C125, C126,C131,C137,C138,C139, C140,C141,C142,C143,C144, C145,C146,C147,C148,C149, C150,C151,C152,C153,C154, C155,C156,C157,C158,C159, C160,C161,C162,C163,C164, C165,C166,C167,C168,C169, C170,C171,C172,C173,C174, C185,C186,C187,C188,C189, C190,C191,C192,C193,C194, C195,C196,C197,C198,C199, C200,C201,C202,C203,C204, C205	1nF	Cond. SMD 0805
12	16	C127,C128,C129,C130,C132, C133,C134,C135,C136,C175, C176,C177,C178,C179,C180, C181	100pF	Cond. SMD 0805
13	3	C182,C183,C184	0.1uF	Cond. SMD 0805
14	4	D1,D2,D3,D4	BAS32	MINIMELF SMD Diode
15	6	FIX1,FIX2,FIX3,FIX4,FIX5, FIX6	FIX35	Foro fissaggio 3.5mm
16	11	F1,F2,F3,F4,F5,F6,F7,F8, F9,F11,F12	RXE020	Fusibile autorip. RXE p5mm
17	3	JP1,JP3,JP6	CN26PDA	Conn.M.C.S.Dritto 26P alette
18	1	JP2	CN40PDA	Conn.M.C.S.Dritto 40P alette
19	2	JP4,JP5	CN10PDA	Conn.M.C.S.Dritto 10P alette
20	1	JP7	CN16PDA	Connettore 16 poli Flat cs con alette
21	2	JP8,JP9	JSM03	Pad SMD a saldare a 2 pos.
22	2	TP1,TP2	TP1	Test point

6.5 Interface exciters RF Switch (SL127IN3001)

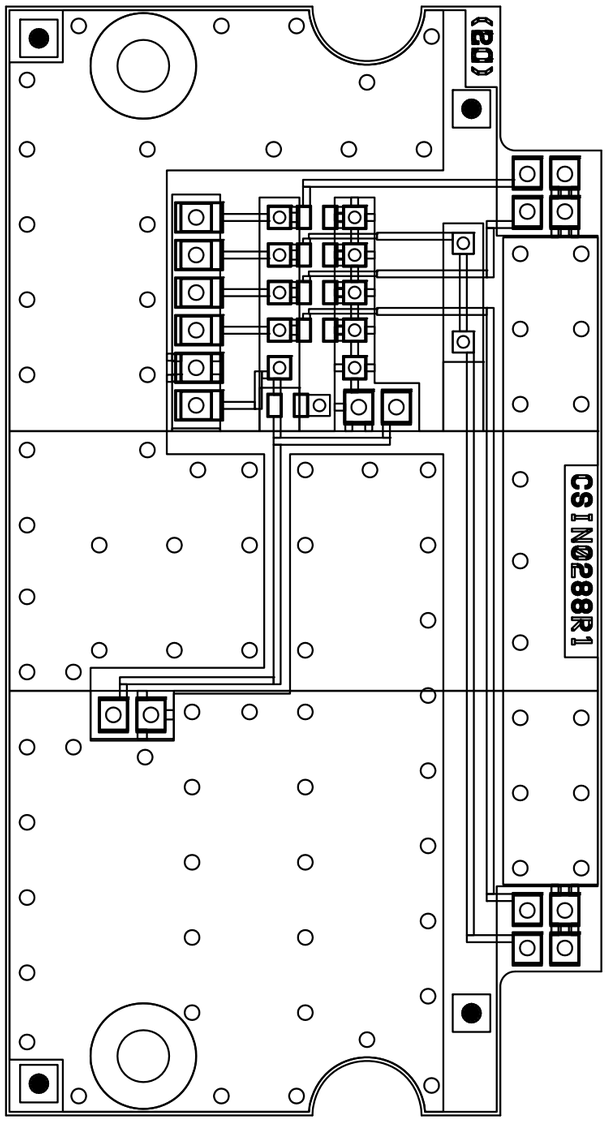

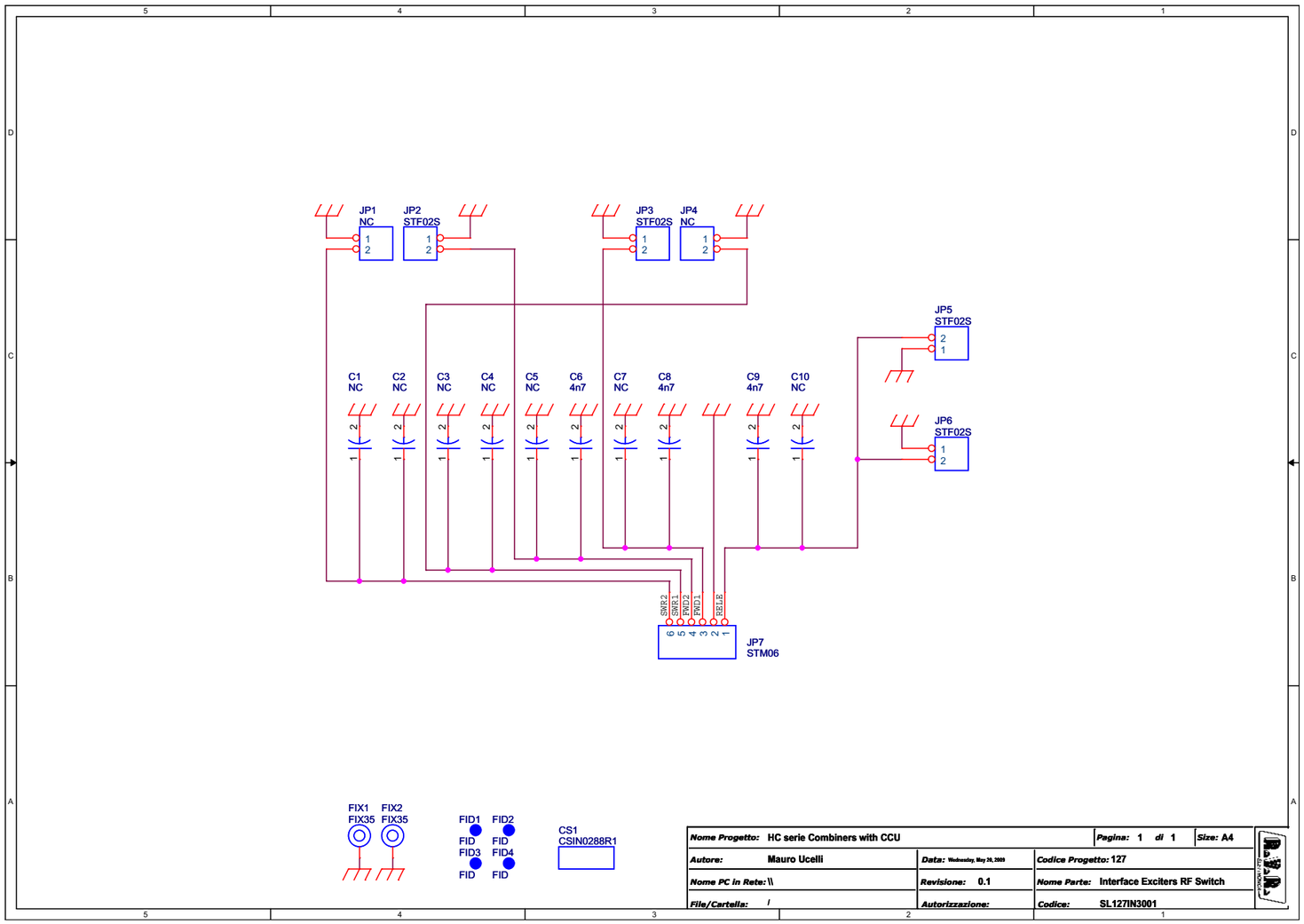

Interface Exciters RF Switch
SL127IN3001
Revision: 0.1
HC serie Combiners with CCU
127
20/05/09
Mauro Ucelli

Item	Quantity	Reference	Part	Description
1	1	CS1	CSIN0288R1	Circuito stampato
2	5	C1,C3,C5,C7,C10	NC	Cond. SMD 0805
3	2	C2,C4	NC	Cond. ceramico p 5mm
4	3	C6,C8,C9	4n7	Cond. ceramico p 5mm
5	4	FID1,FID2,FID3,FID4	FID	Fiducial CS
6	2	FIX1,FIX2	FIX35	Foro fissaggio 3.5mm
7	2	JP1,JP4	NC	Strip femmina 2 pin
8	4	JP2,JP3,JP5,JP6	STF02S	Strip femmina 2 pin
9	1	JP7	STM06	Conn. (M) 90 gradi 6 pin P. 2.54

6.6 Exciters RF Switch (SL127SW1002)

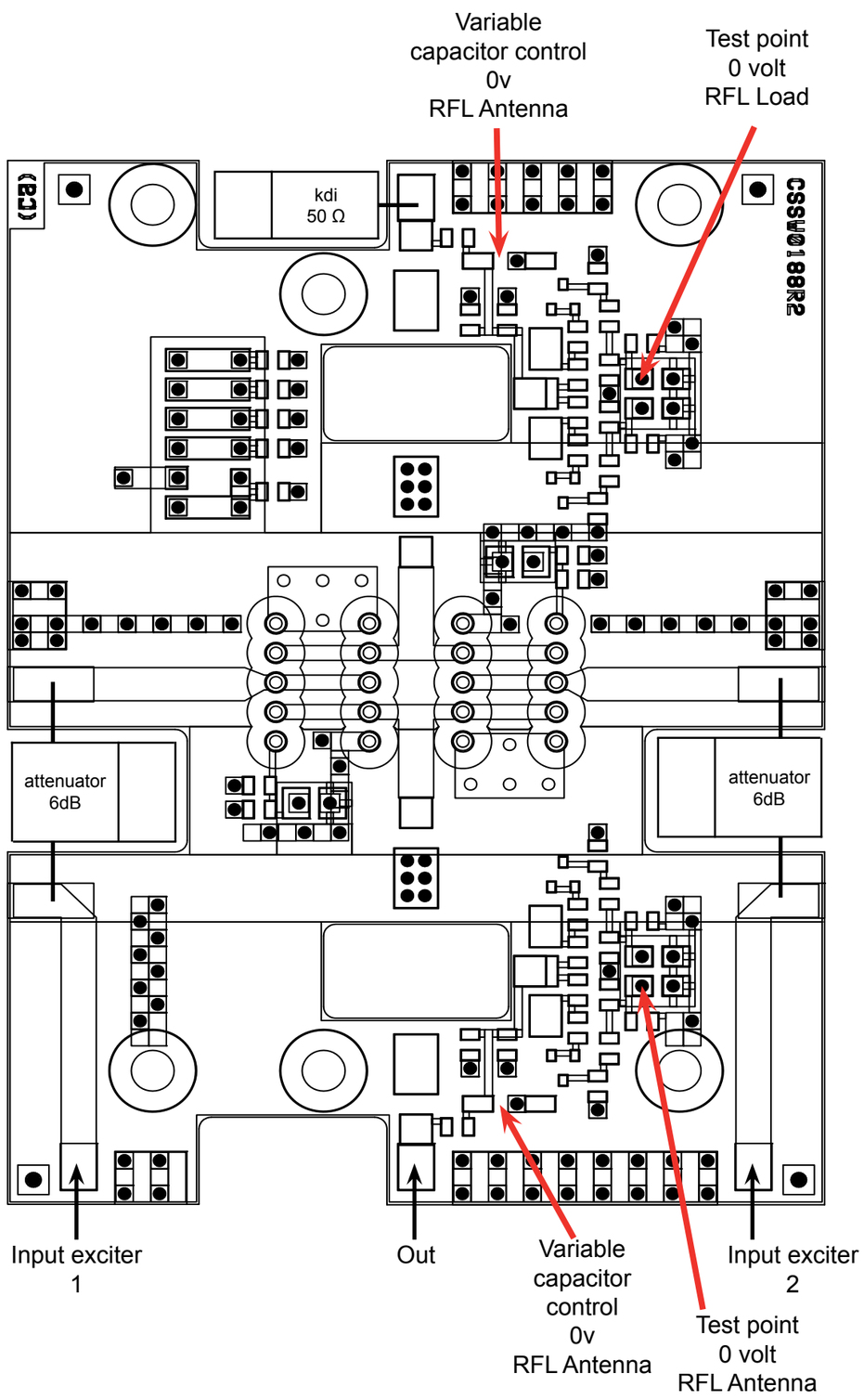

Exciters RF Switch
SL127SW1002

Item	Quantity	Reference	Part	Description
1	1	CS1	CSSW0188R2	Circuito stampato
2	5	C1,C2,C3,C4,C23	100nF	Cond. SMD 0805
3	7	C5,C6,C7,C8,C9,C10,C22	4.7nF	Cond. SMD 0805
4	2	C11,C14	10pF	Cond. SMD 0805 COG
5	2	C12,C13	7/50pF	Comp. var. Murata TZB4B
6	2	C15,C16	1pF	Cond. SMD 0805 COG
7	5	C17,C18,C19,C20,C21	NC	Cond. SMD 0805
8	2	DCPLR1,DCPLR2	DIR_CPLR	Accopp. direz.
9	4	D1,D2,D3,D4	HSMS2800	Diodo Shottky SOT23
10	4	FID1,FID2,FID3,FID4	FID	Fiducial CS
11	6	FIX1,FIX2,FIX3,FIX4,FIX5, FIX6	FIX10	Foro Test Point 1mm
12	6	FIX7,FIX8,FIX9,FIX10, FIX11,FIX12	FIX35	Foro fissaggio 3.5mm
13	1	JP1	NC	Panduit maschio 6 pin
14	2	JP2,JP5	NC	Strip maschio 2 pin
15	4	JP3,JP4,JP6,JP7	STM02S	Strip maschio 2 pin
16	14	PAD1,PAD2,PAD3,PAD4,PAD5, PAD6,PAD7,PAD8,PAD9, PAD10,PAD11,PAD12,PAD13, PAD14	PAD	
17	2	RY1,RY2	RLTQ2A12V	Rele' TQ2
18	2	R1,R21	50R -6dB	RF -6dB 50R Attenuator
19	4	R2,R3,R4,R5	10K0	Res. SMD 0805
20	6	R6,R7,R8,R9,R10,R19	1K0	Res. SMD 0805
21	4	R11,R14,R15,R18	10H0	Res. SMD 0805
22	4	R12,R13,R16,R17	51H0	Res. SMD 0805
23	1	R20	50H	Termin. 1 fix 32-1157

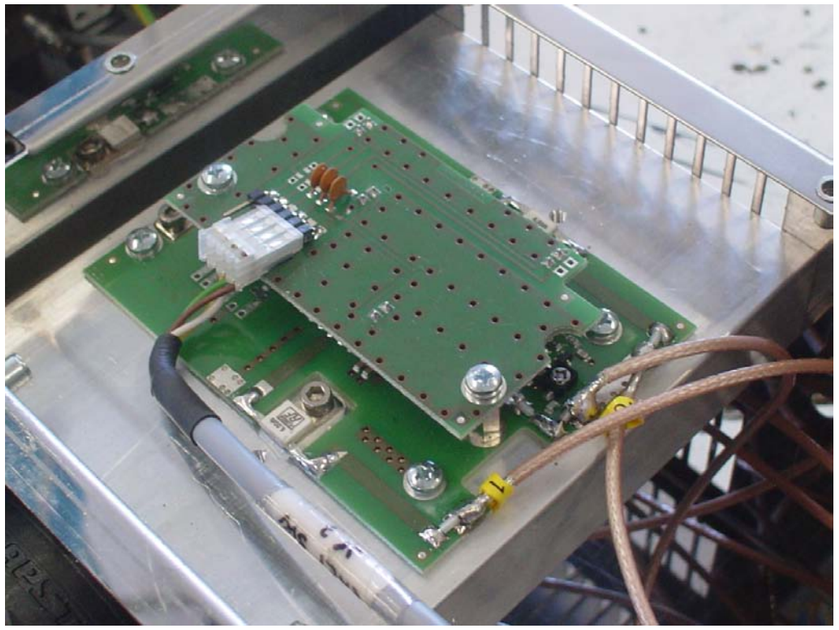

Exciter RF switch

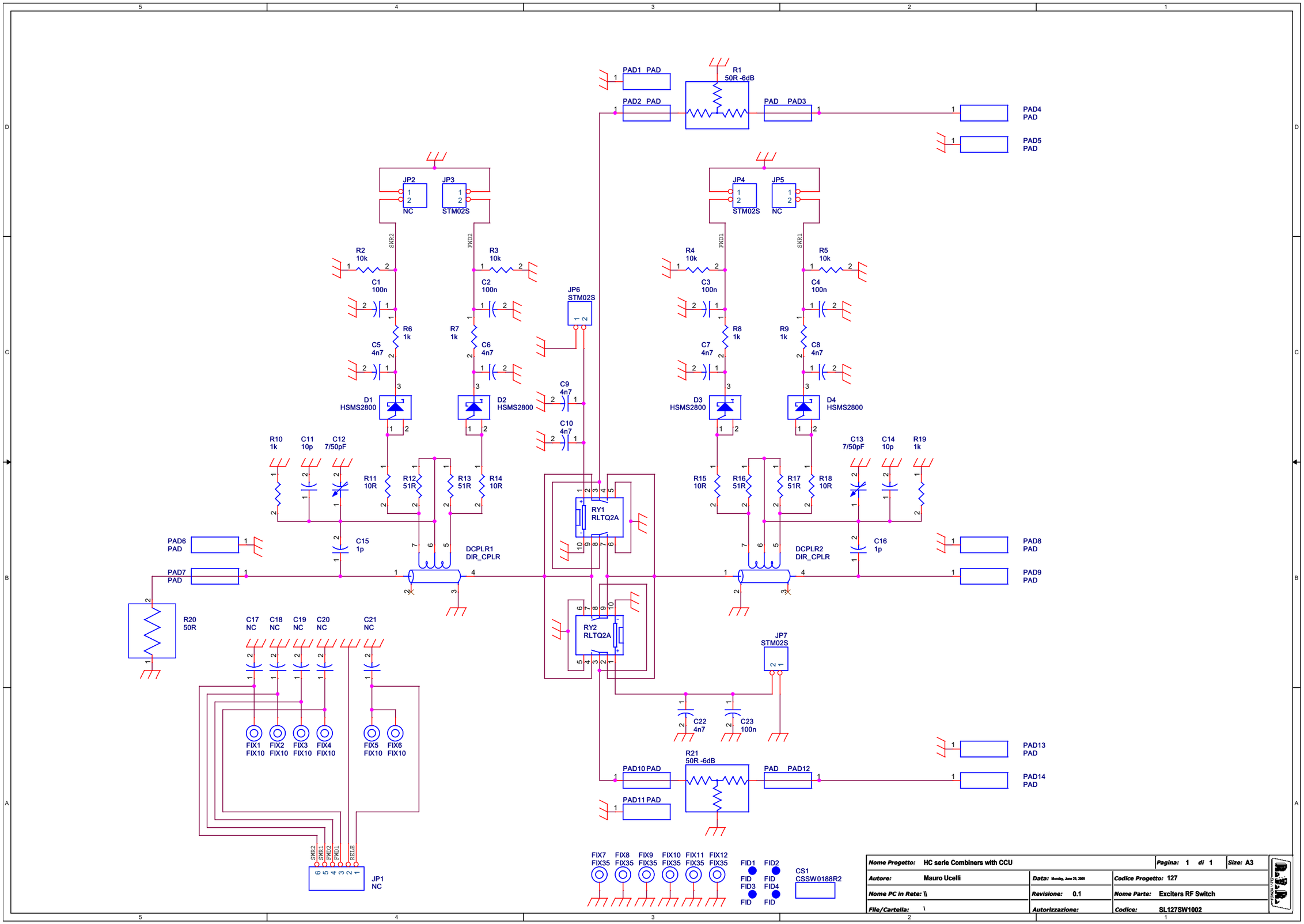
PAD1 PAD
PAD2 PAD
R1
50R -6dB
PAD PAD3
PAD4
PAD
PAD5
PAD
JP2
NC
JP3
STM02S
JP4
STM02S
JP5
NC
SWR2
FWD2
FWD1
SWR1
R2
10k
R3
10k
R4
10k
R5
10k
C1
100n
C2
100n
C3
100n
C4
100n
JP6
STM02S
R6
1k
R7
1k
R8
1k
R9
1k
C5
4n7
C6
4n7
C7
4n7
C8
4n7
C9
4n7
C10
4n7
D1
HSMS2800
D2
HSMS2800
D3
HSMS2800
D4
HSMS2800
R10
1k
C11
10p
C12
7/50pF
C13
7/50pF
C14
10p
R19
1k
R11
10R
R12
51R
R13
51R
R14
10R
R15
10R
R16
51R
R17
51R
R18
10R
RY1
RLTQ2A
PAD6
PAD
PAD7
PAD
C15
1p
DCPLR1
DIR_CPLR
DCPLR2
DIR_CPLR
C16
1p
PAD8
PAD
PAD9
PAD
R20
50R
C17
NC
C18
NC
C19
NC
C20
NC
C21
NC
RY2
RLTQ2A
JP7
STM02S
C22
4n7
C23
100n
FIX1
FIX10
FIX2
FIX10
FIX3
FIX10
FIX4
FIX10
FIX5
FIX10
FIX6
FIX10
R21
50R -6dB
PAD10 PAD
PAD11 PAD
PAD PAD12
PAD13
PAD
PAD14
PAD
SWR2
SWR1
FWD2
FWD1
RELE
JP1
NC
FIX7
FIX35
FIX8
FIX35
FIX9
FIX35
FIX10
FIX35
FIX11
FIX35
FIX12
FIX35
FID1
FID
FID2
FID
FID3
FID
FID4
FID
CS1
CSSW0188R2
Nome Progetto: HC serie Combiners with CCU
Pagina: 1 di 1
Size: A3
Autore: Mauro Ucelli
Data: Monday, June 29, 2009
Codice Progetto: 127
Nome PC in Rete: \\
Revisione: 0.1
Nome Parte: Exciters RF Switch
File/Cartella: \
Autorizzazione:
Codice: SL127SW1002

6.7 CPU board (CPUPJ2KMC)

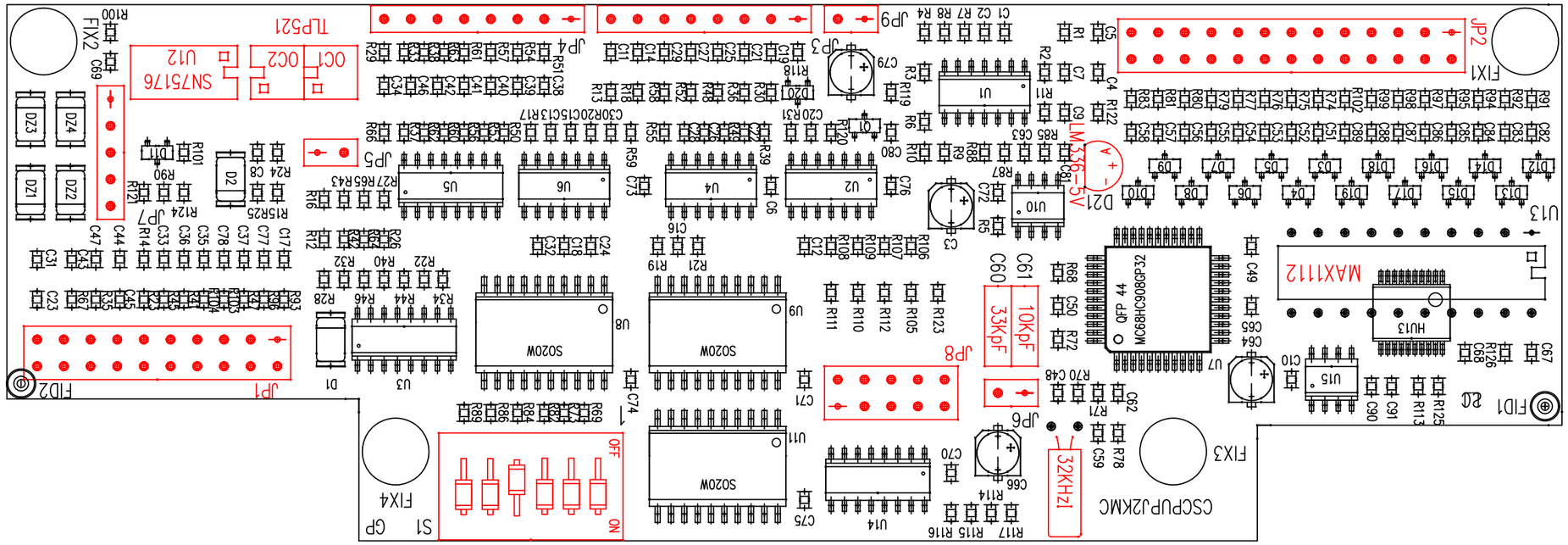

NOME PARTE: Scheda CPU	
AUTORE:U.T. – Rev.: BERTI J.	DATA:11/02/2004
REVISIONE: 1.0	SCALA: 1:1
SIZE:A4	PAGINA:1 DI 1
ARCHIVIAZIONE ELETTRONICA:CARTELLA PROGETTI	CODICE PROGETTO:014
CODICE DISEGNO:SLCPUPJ2KMC	
MATERIALE:/	TRATTAMENTO:/
PROFILO: /	STATO:ESECUTIVO

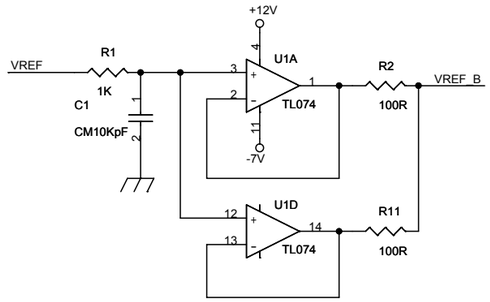

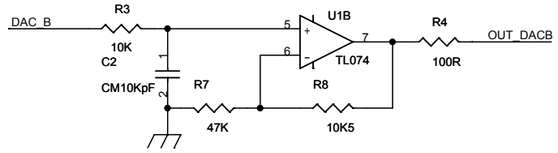

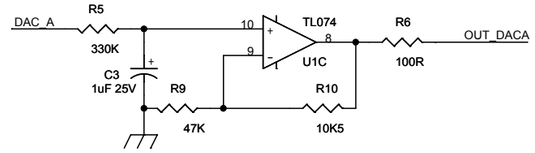

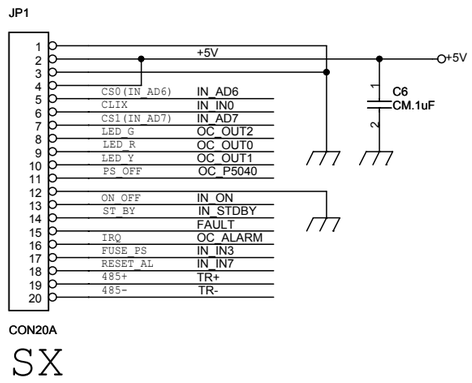

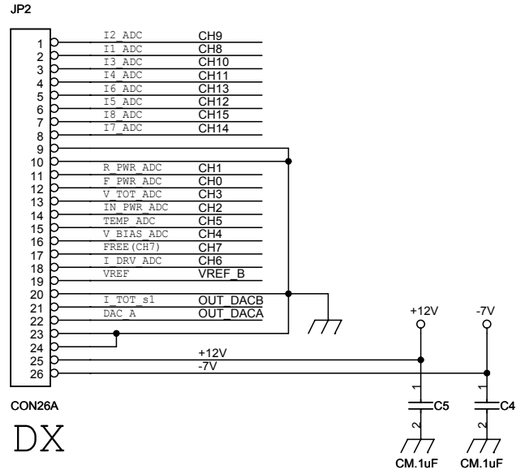

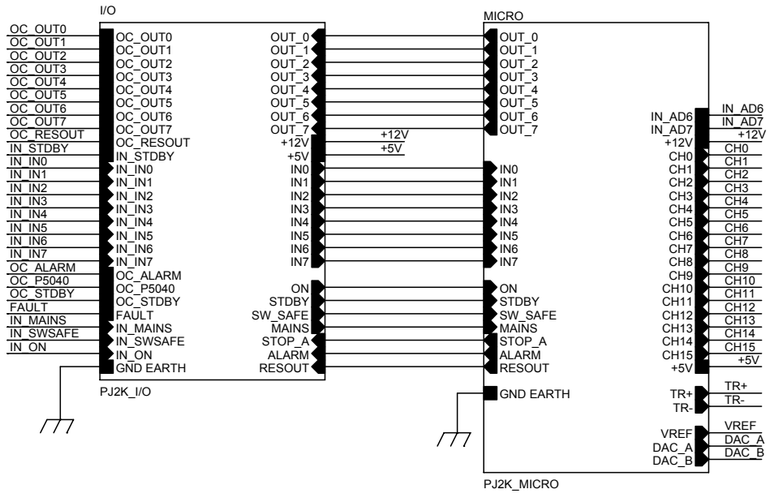

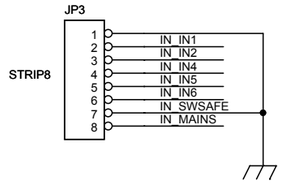

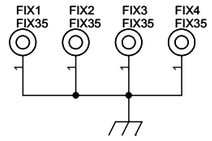

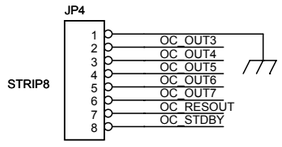

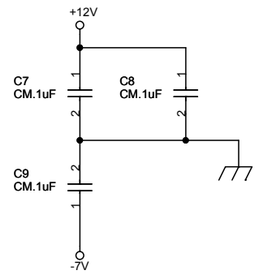

Nome Progetto: HC5_10KW		**Pagina:** 1 **di** 3	**Size:** A3
Autore: Mauro Ucelli	**Data:** 11/02/04	**Codice Progetto:** HC5-10	
Nome PC in Rete: \\ut_srv\progetti	**Revisione:** 1.0	**Nome Parte:** CPU Card - General Section	
File/Cartella: SLCPUPJ2KMC	**Autorizzazione:**	**Codice:** SLCPUPJ2KMC	

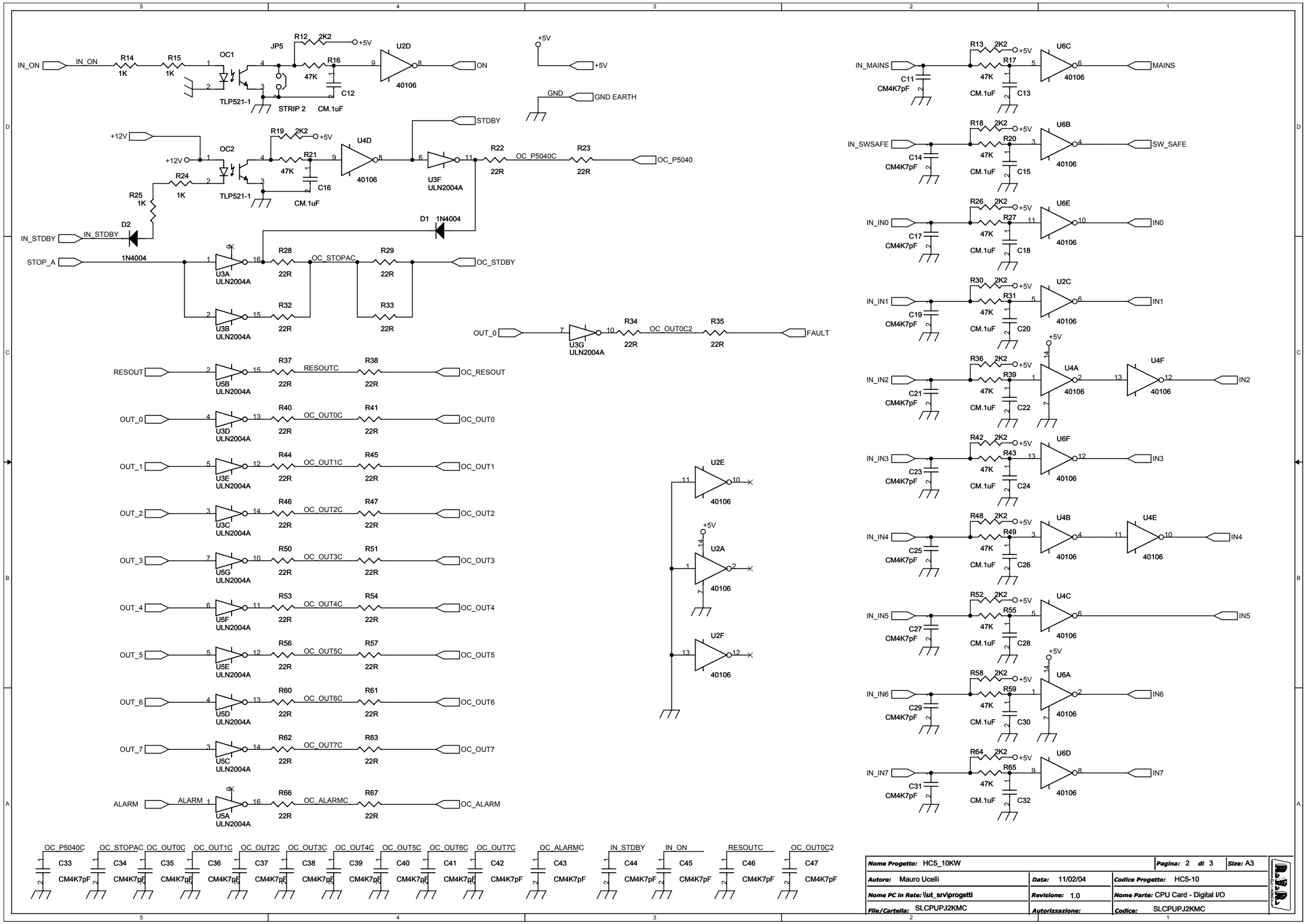
IN_ON
R14 1K
R15 1K
OC1
TLP521-1
JP5
STRIP 2
R12 2K2
+5V
R16 47K
C12 CM.1uF
U2D
40106
ON
+5V
GND
GND EARTH
STDBY
+12V
OC2
R24 1K
R25 1K
R19 2K2
R21 47K
C16 CM.1uF
U4D
U3F ULN2004A
R22 22R
OC_P5040C
R23 22R
OC_P5040
D2
1N4004
IN_STDBY
D1 1N4004
STOP_A
U3A ULN2004A
R28 22R
OC_STOPAC
R29 22R
OC_STDBY
U3B ULN2004A
R32 22R
R33 22R
OUT_0
U3G ULN2004A
R34 22R
OC_OUT0C2
R35 22R
FAULT
RESOUT
U5B ULN2004A
R37 22R
RESOUTC
R38 22R
OC_RESOUT
OUT_0
U3D ULN2004A
R40 22R
OC_OUT0C
R41 22R
OC_OUT0
OUT_1
U3E ULN2004A
R44 22R
OC_OUT1C
R45 22R
OC_OUT1
OUT_2
U3C ULN2004A
R46 22R
OC_OUT2C
R47 22R
OC_OUT2
OUT_3
U5G ULN2004A
R50 22R
OC_OUT3C
R51 22R
OC_OUT3
OUT_4
U5F ULN2004A
R53 22R
OC_OUT4C
R54 22R
OC_OUT4
OUT_5
U5E ULN2004A
R56 22R
OC_OUT5C
R57 22R
OC_OUT5
OUT_6
U5D ULN2004A
R60 22R
OC_OUT6C
R61 22R
OC_OUT6
OUT_7
U5C ULN2004A
R62 22R
OC_OUT7C
R63 22R
OC_OUT7
ALARM
U5A ULN2004A
R66 22R
OC_ALARMC
R67 22R
OC_ALARM
U2E
U2A
U2F
40106
IN_MAINS
C11 CM4K7pF
R13 2K2
R17 47K
C13 CM.1uF
U6C
MAINS
IN_SWSAFE
C14 CM4K7pF
R18 2K2
R20 47K
C15 CM.1uF
U6B
SW_SAFE
IN_IN0
C17 CM4K7pF
R26 2K2
R27 47K
C18 CM.1uF
U6E
IN0
IN_IN1
C19 CM4K7pF
R30 2K2
R31 47K
C20 CM.1uF
U2C
IN1
IN_IN2
C21 CM4K7pF
R36 2K2
R39 47K
C22 CM.1uF
U4A
U4F
IN2
IN_IN3
C23 CM4K7pF
R42 2K2
R43 47K
C24 CM.1uF
U6F
IN3
IN_IN4
C25 CM4K7pF
R48 2K2
R49 47K
C26 CM.1uF
U4B
U4E
IN4
IN_IN5
C27 CM4K7pF
R52 2K2
R55 47K
C28 CM.1uF
U4C
IN5
IN_IN6
C29 CM4K7pF
R58 2K2
R59 47K
C30 CM.1uF
U6A
IN6
IN_IN7
C31 CM4K7pF
R64 2K2
R65 47K
C32 CM.1uF
U6D
IN7
OC_P5040C C33 CM4K7pF
OC_STOPAC C34 CM4K7pF
OC_OUT0C C35 CM4K7pF
OC_OUT1C C36 CM4K7pF
OC_OUT2C C37 CM4K7pF
OC_OUT3C C38 CM4K7pF
OC_OUT4C C39 CM4K7pF
OC_OUT5C C40 CM4K7pF
OC_OUT6C C41 CM4K7pF
OC_OUT7C C42 CM4K7pF
OC_ALARMC C43 CM4K7pF
IN_STDBY C44 CM4K7pF
IN_ON C45 CM4K7pF
RESOUTC C46 CM4K7pF
OC_OUT0C2 C47 CM4K7pF
Nome Progetto: HC5_10KW
Pagina: 2 di 3
Size: A3
Autore: Mauro Ucelli
Data: 11/02/04
Codice Progetto: HC5-10
Nome PC in Rete: \\ut_srv\progetti
Revisione: 1.0
Nome Parte: CPU Card - Digital I/O
File/Cartella: SLCPUPJ2KMC
Autorizzazione:
Codice: SLCPUPJ2KMC

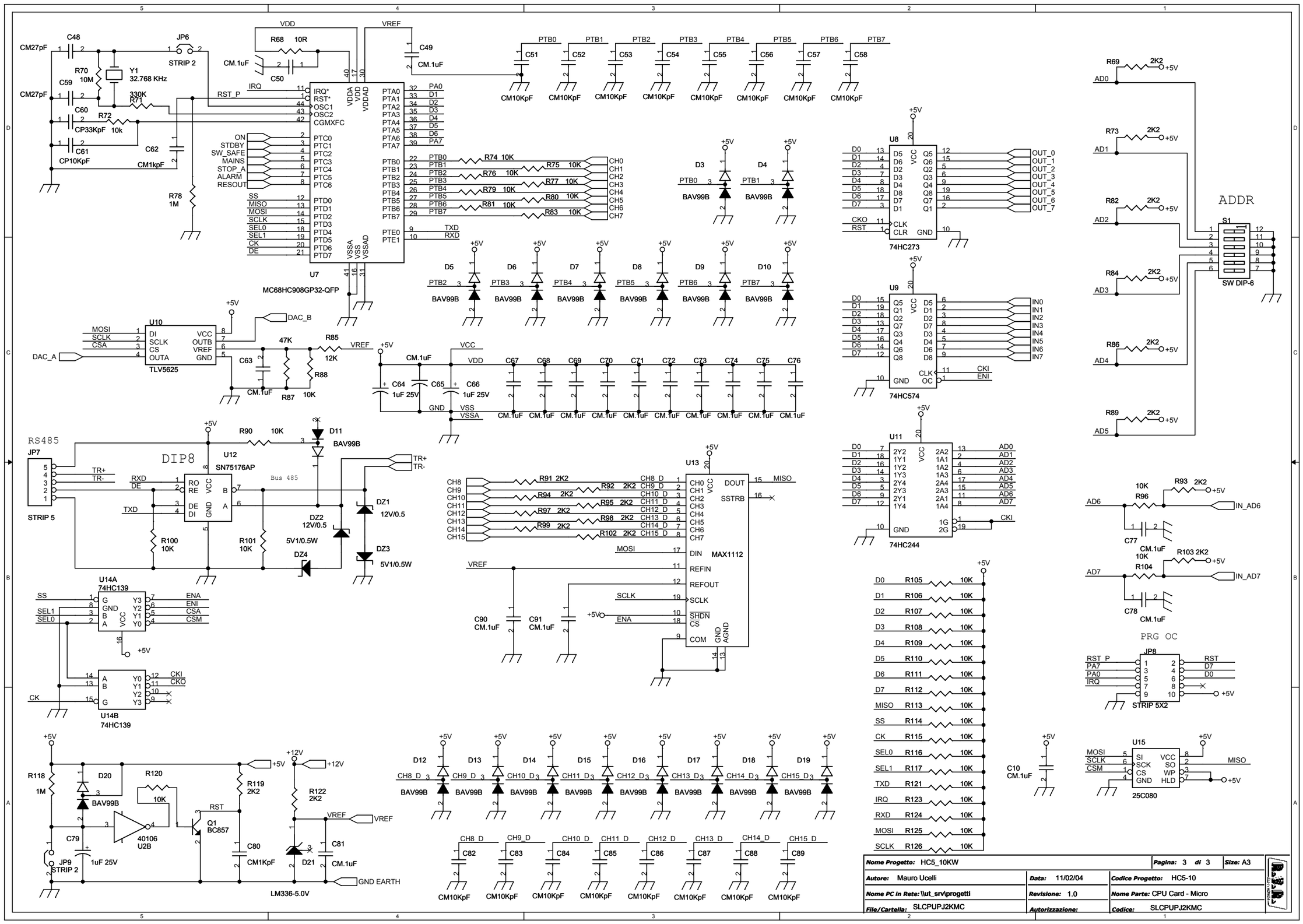
U7
MC68HC908GP32-QFP
U8
74HC273
U9
74HC574
U11
74HC244
U13
MAX1112
U10
TLV5625
U12
SN75176AP
U14A
74HC139
U14B
74HC139
U15
25C080
U16
LM336-5.0V
RS485
DIP8
Bus 485
ADDR
SW DIP-6
PRG OC
STRIP 5X2
STRIP 2
Y1
32.768 KHz
Nome Progetto: HC5_10KW
Pagina: 3 di 3
Size: A3
Autore: Mauro Ucelli
Data: 11/02/04
Codice Progetto: HC5-10
Nome PC in Rete: \\ut_srv\progetti
Revisione: 1.0
Nome Parte: CPU Card - Micro
File/Cartella: SLCPUPJ2KMC
Autorizzazione:
Codice: SLCPUPJ2KMC

General Revised: Thursday, May 29, 2003
CSCPUPJ2KMC Revision: 1

Item	Quantity	Reference	Part
1	18	C1, C2, C51, C52, C53, C54, C55, C56, C57, C58, C82, C83, C84, C85, C86, C87, C88, C89	CM10KpF
2	4	C3, C64, C66, C79	1uF 25V
3	38	C4, C5, C6, C7, C8, C9, C10, C12, C13, C15, C16, C18, C20, C22, C24, C26, C28, C30, C32, C49, C50, C63, C65, C67, C68, C69, C70, C71, C72, C73, C74, C75, C76, C77, C78, C81, C90, C91	CM.1uF
4	25	C11, C14, C17, C19, C21, C23, C25, C27, C29, C31, C33, C34, C35, C36, C37, C38, C39, C40, C41, C42, C43, C44, C45, C46, C47	CM4K7pF
5	2	C48, C59	CM27pF
6	1	C60	CP33KpF
7	1	C61	CP10KpF
8	2	C62, C80	CM1KpF
9	2	DZ2, DZ1	12V/0.5
10	2	DZ4, DZ3	5V1/0.5W
11	2	D1, D2	1N4004
12	18	D3, D4, D5, D6, D7, D8, D9, D10, D11, D12, D13, D14, D15, D16, D17, D18, D19, D20	BAV99B
13	1	D21	LM336-5.0V
14	4	FIX1, FIX2, FIX3, FIX4	FIX35
15	1	JP1	CON20A
16	1	JP2	CON26A
17	2	JP4, JP3	STRIP8
18	3	JP5, JP6, JP9	STRIP 2
19	1	JP7	STRIP 5
20	1	JP8	STRIP 5X2
21	2	OC1, OC2	TLP521-1
22	1	Q1	BC857
23	5	R1, R14, R15, R24, R25	1K
24	4	R2, R4, R6, R11	100R
25	35	R3, R72, R74, R75, R76, R77, R79, R80, R81, R83, R88, R90, R96, R100, R101, R104, R105, R106, R107, R108, R109, R110, R111, R112, R113, R114, R115, R116, R117, R120, R121, R123, R124, R125, R126	10K
26	2	R71, R5	330K
27	15	R7, R9, R16, R17, R20, R21, R27, R31, R39, R43, R49, R55, R59, R65, R87	47K
28	2	R8, R10	10K5
29	30	R12, R13, R18, R19, R26, R30, R36, R42, R48, R52, R58, R64, R69, R73, R82, R84, R86, R89, R91, R92, R93, R94, R95, R97, R98, R99, R102, R103, R119, R122	2K2
30	28	R22, R23, R28, R29, R32, R33, R34, R35, R37, R38, R40, R41, R44, R45, R46, R47, R50, R51, R53, R54, R56, R57, R60, R61, R62, R63, R66, R67	22R
31	1	R68	10R
32	1	R70	10M
33	2	R118, R78	1M
34	1	R85	12K
35	1	S1	SW DIP-6
36	1	U1	TL074
37	3	U2, U4, U6	40106
38	2	U5, U3	ULN2004A
39	1	U7	MC68HC908GP32-QFP
40	1	U8	74HC273
41	1	U9	74HC574
42	1	U10	TLV5625
43	1	U11	74HC244
44	1	U12	SN75176AP
45	1	U13	MAX1112
46	1	U14	74HC139
47	1	U15	25C080
48	1	Y1	32.768 KHz

6.8 Splitter board (SLSPLTHC3-01)

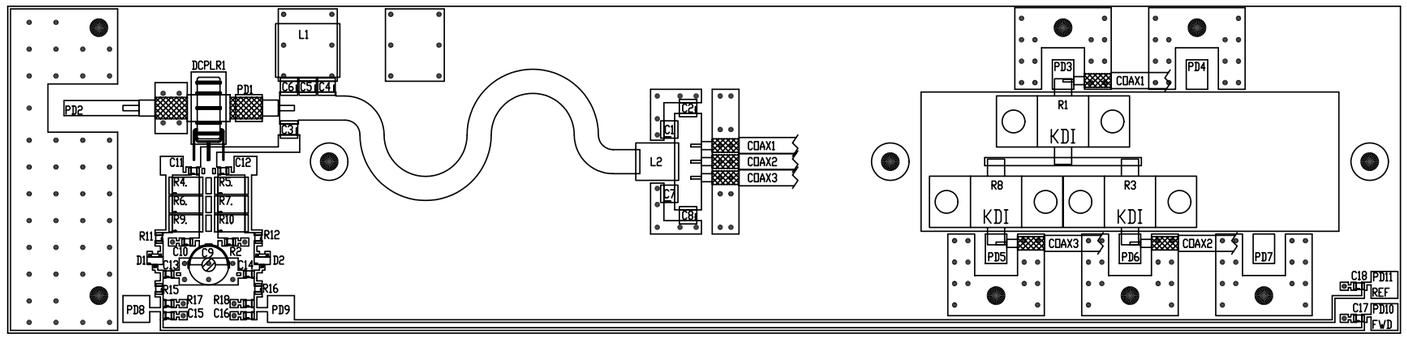

NOME PROGETTO: HC3-6			NOME PARTE: SCHEDA SPLITTER PER HC3-6				
AUTORE: M. UCELLI			DATA: 19/04/2004	REVISIONE: 1.0	SCALA: 1:1	SIZE: A3	PAGINA: 1 DI 1
ARCHIVIAZIONE ELETTRONICA: "CARTELLA PROGETTI" SU "UT_SRV"		CODICE PROGETTO: 017		CODICE DISEGNO: SLSPLTHC3-01			
MATERIALE: /	TRATTAMENTO: /		PROFILO: /			STATO: ESECUTIVO	

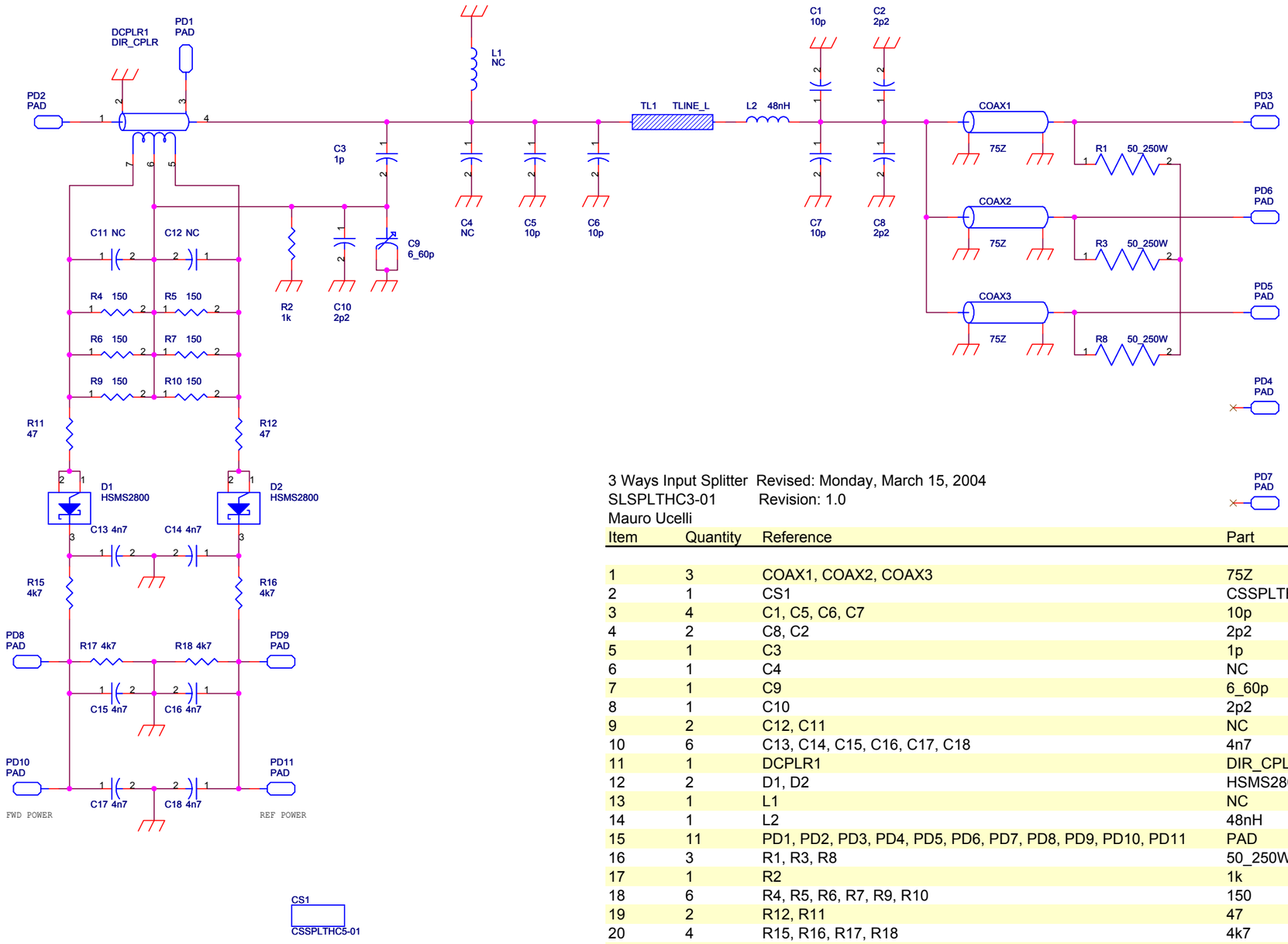

3 Ways Input Splitter Revised: Monday, March 15, 2004
SLSPLTHC3-01 Revision: 1.0
Mauro Ucelli

Item	Quantity	Reference	Part	Description
1	3	COAX1, COAX2, COAX3	75Z	Cavo coax
2	1	CS1	CSSPLTHC5-01	Circuito stampato
3	4	C1, C5, C6, C7	10p	Cond. SMD 1212 HQ
4	2	C8, C2	2p2	Cond. SMD 1212 HQ
5	1	C3	1p	Cond. SMD 1212 HQ
6	1	C4	NC	Cond. SMD 1212 HQ
7	1	C9	6_60p	Comp. ceramico dia. 7mm
8	1	C10	2p2	Cond. SMD 0805
9	2	C12, C11	NC	Cond. SMD 0805
10	6	C13, C14, C15, C16, C17, C18	4n7	Cond. SMD 0805
11	1	DCPLR1	DIR_CPLR	Accopp. direz.
12	2	D1, D2	HSMS2800	Diodo Shottky SOT23
13	1	L1	NC	Induttanza cilindrica
14	1	L2	48nH	Induttanza cilindrica
15	11	PD1, PD2, PD3, PD4, PD5, PD6, PD7, PD8, PD9, PD10, PD11	PAD	
16	3	R1, R3, R8	50_250W	Resistenza KDI 2 fix
17	1	R2	1k	Res. SMD 0805
18	6	R4, R5, R6, R7, R9, R10	150	Res. SMD 2512
19	2	R12, R11	47	Res. SMD 0805
20	4	R15, R16, R17, R18	4k7	Res. SMD 0805
21	1	TL1	TLINE_L	Linea strip CS

Nome Progetto: HC3-6			**Pagina:** 1 di 1 **Size:** A3
Autore: Mauro Ucelli	**Data:** 19/04/04	**Codice Progetto:** HC3-6	
Nome PC in Rete: \\UT_SRV\Progetti	**Revisione:** 1.0	**Nome Parte:** 3 Ways Input Splitter	
File/Cartella:	**Autorizzazione:**	**Codice:** SLSPLTHC3-01	

6.9 Phase shifter (SLPHSHHC3-02)

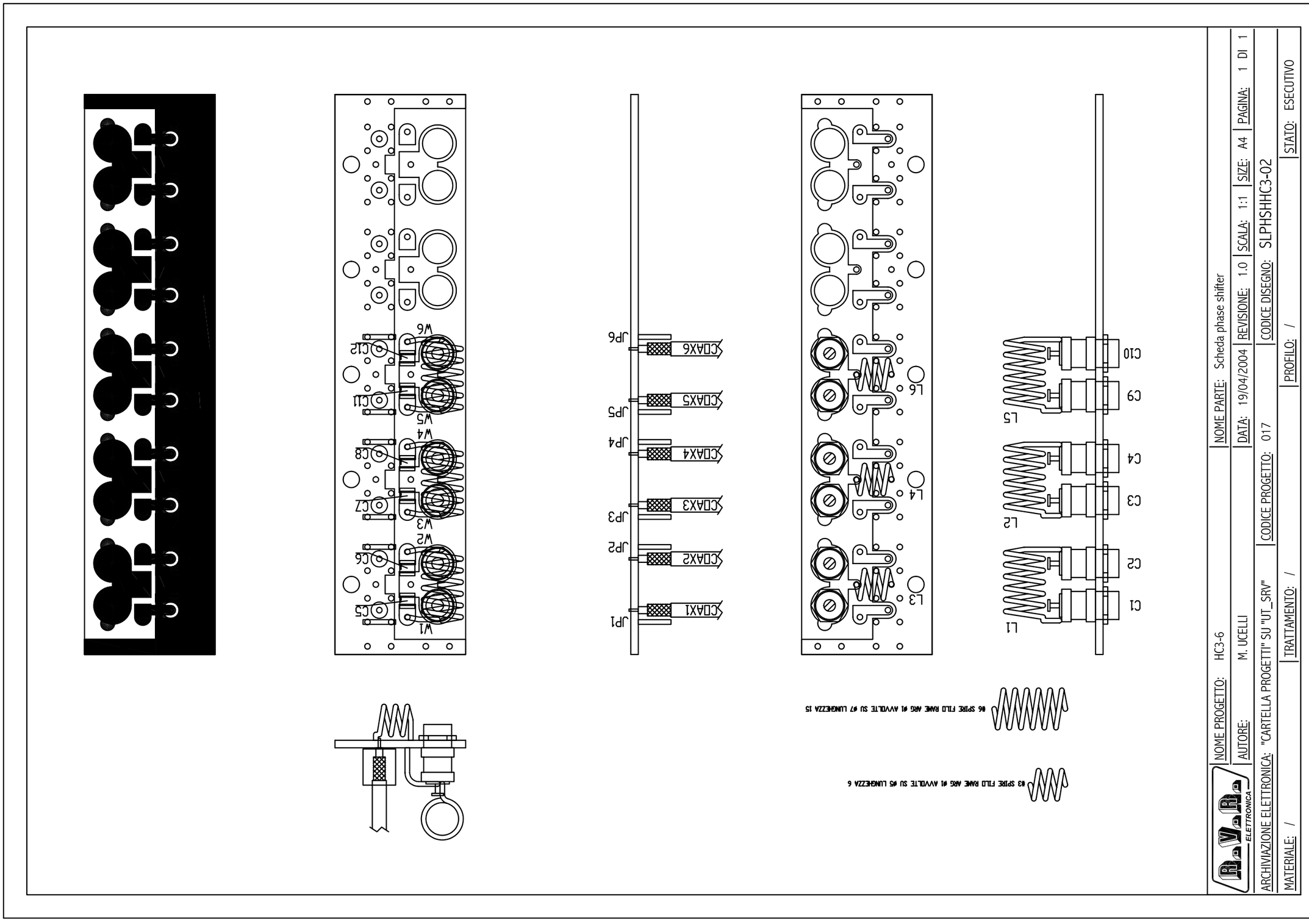

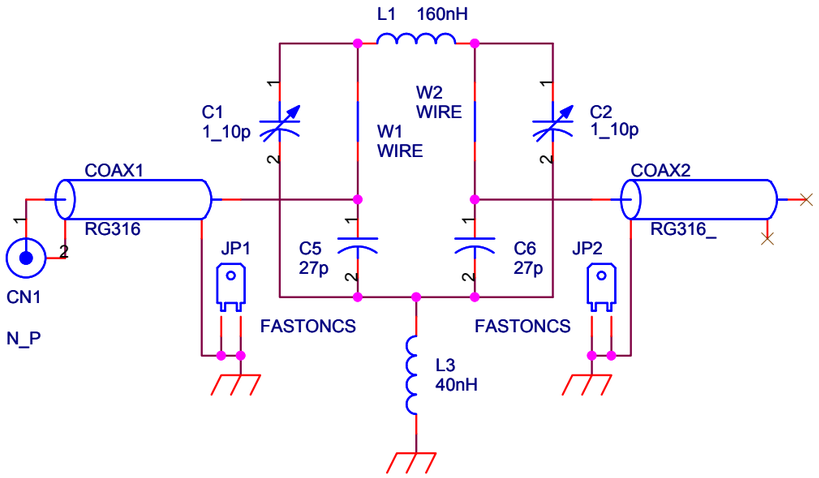

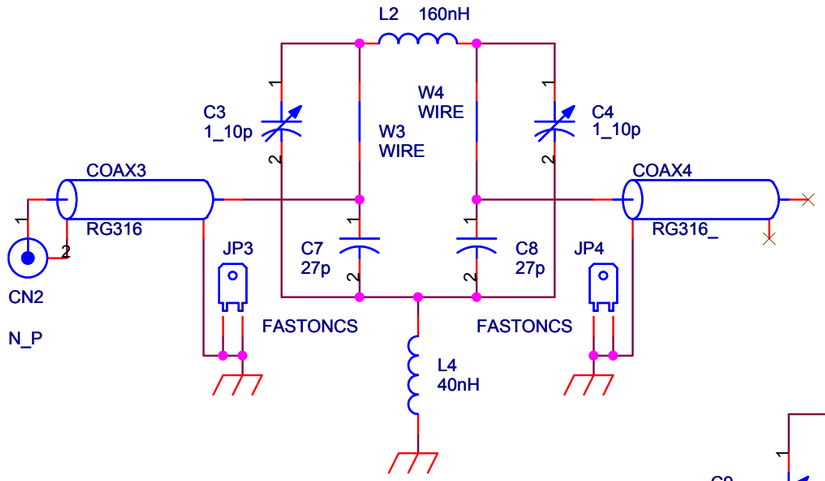

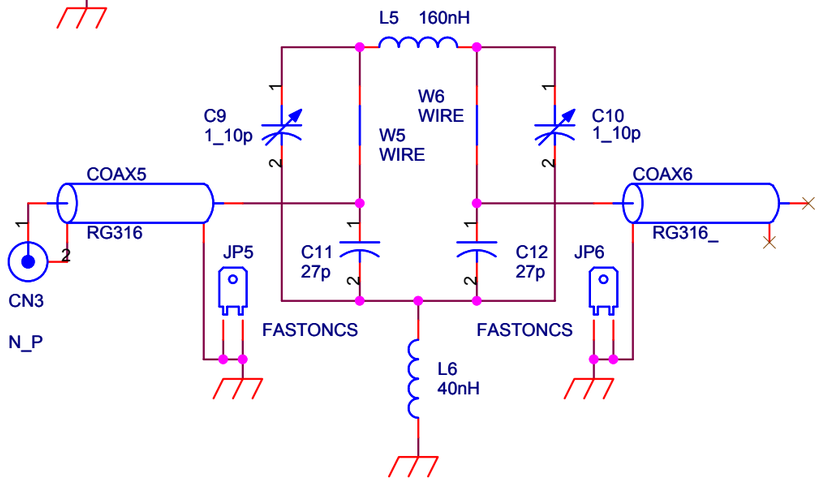

Phase Shifter for HC3-6 Revised: Tuesday, March 23, 2004
SLPHSHHC3-02 Revision: 1.0
Mauro Ucelli

Item	Quantity	Reference	Part	Description
1	3	CN1, CN2, CN3	N_P	Conn. N da pannello per cavo RG316
2	3	COAX1, COAX3, COAX5	RG316	Cavo coax 50H RG316
3	3	COAX2, COAX4, COAX6	RG316_	Cavo coax 50H RG316 (595mm)
4	1	CS1	CSPHSHHC5_03	Circuito stampato
5	6	C1, C2, C3, C4, C9, C10	1_10p	Comp. var. ad aria Tekelek 6mm
6	6	C5, C6, C7, C8, C11, C12	27p	Cond. SMD 1212 HQ
7	5	FIX1, FIX2, FIX3, FIX4, FIX5	FIX35	Foro fissaggio 3.5mm
8	6	JP1, JP2, JP3, JP4, JP5, JP6	FASTONCS	Faston da CS p. 5.08
9	3	L1, L2, L5	160nH	Induttanza cilindrica
10	3	L3, L4, L6	40nH	Induttanza cilindrica
11	6	W1, W2, W3, W4, W5, W6	WIRE	Filo a saldare

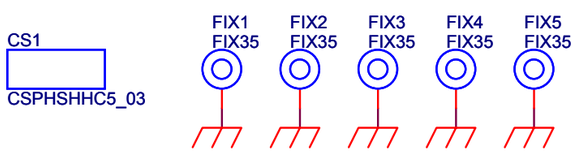

Nome Progetto: HC3-6		**Pagina:** 1 **di** 1	**Size:** A4
Autore: Mauro Ucelli	**Data:** 19/04/04	**Codice Progetto:** 017	
Nome PC in Rete: \\UT_SRV\Progetti	**Revisione:** 1.0	**Nome Parte:** Phase Shifter for HC3-6	
File/Cartella: Esecutivi\Schemi Elettrici\SLPHSHHC3-02	**Autorizzazione:**	**Codice:** SLPHSHHC3-02	

7. PJ5000U-KLC amplifier (alias Barracuda)

7.1 Description

The PJ5000U-KLC is an RF amplifier for frequency modulation sound broadcasting with a max. rated output of 5400W.

It is a fully solid-state apparatus of modern design that use MOSFET as active components in the FM amplifying modules, and for the cooling it uses of the coolant rather than forced air.

The amplifier is designed in only 4 units for assembly in a 19” rack., is controlled by a micro-processor-based system.

7.2 Frontal Panel

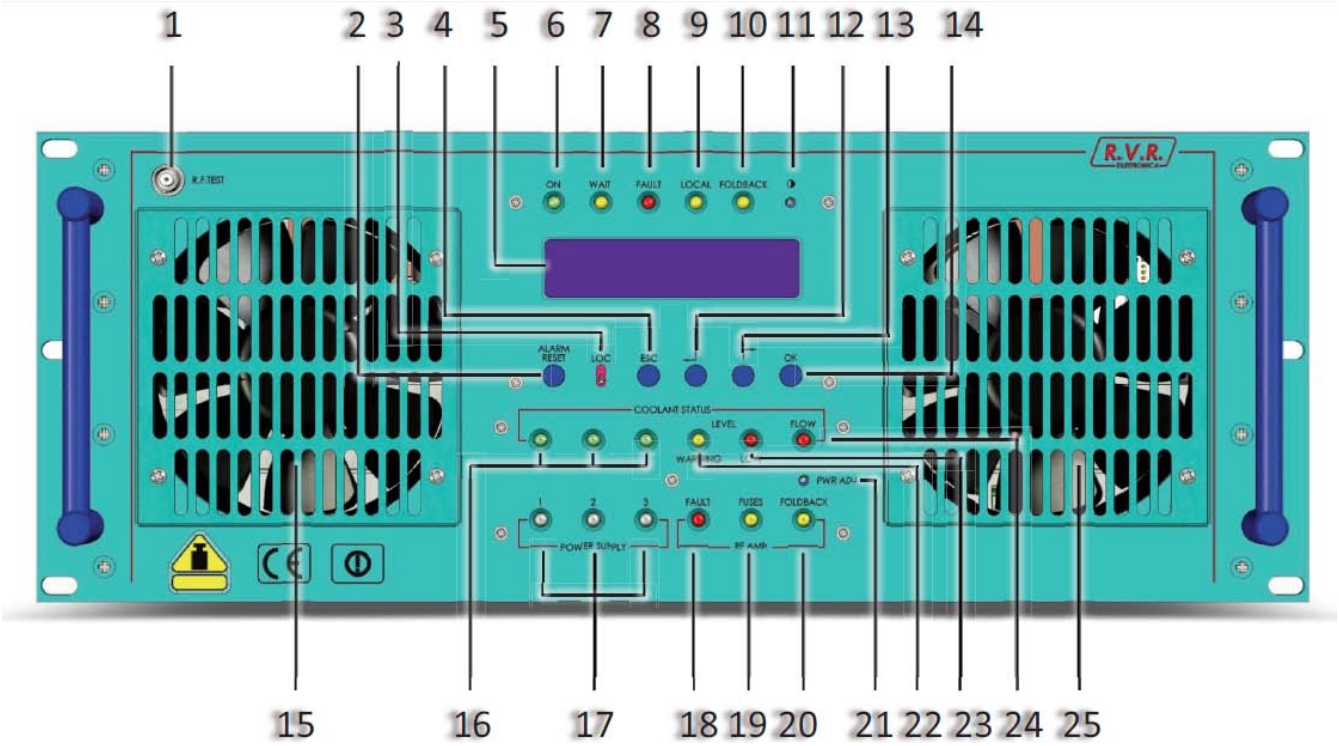

1	RF TEST	BNC connector for RF monitor output. The output level is -60dB referred to the power output in 87.5 - 108 MHz range
2	ALARM RESET	Button used to manually reset the protection system
3	LOC/REM	Switch to select the local or remote control modes
4	ESC	Button used to exit from a menu
5	DISPLAY	LCD Display
6	ON	Green LED. Indicates that the amplifier is in ON condition
7	WAIT	This LED indicates the status of waiting (the amplifier is temporarily disabled, but will be reactivated automatically when the blockage is removed, or after a set period of time depending on the type of protection)
8	FAULT	This LED indicates a fault (the amplifier is blocked, and required the intervention of an operator for the restoration).Requires pressing the button ALARM RESET
9	LOCAL	Yellow LED, indicating that the amplifi er is in local control mode
10	FOLDBACK	Yellow LED, indicating that the foldback function is active (automatic reduction of the distributed power, run by the micro board inside the module)

11		Trimmer to regulate the contrast of the LCD display
12		Click this button to scroll inside a menu (to the right or down) or to reduce the value of a parameter being modified.
13		Click this button to scroll inside a menu (to the left or up) or to increase the value of a parameter being modified.
14	OK	Click this button to access a sub-menu, to enter the editing mode or to confirm a modified value.
15-25	AIR FLOW	Grill for the ventilation flow passage
16	COOLANT STATUS A-B-C	The green LED indicates correct operation of pumps (A e B) and external unit fan (C).These LEDs are active only when the module is single and is configured as “Master” that handles the exchange of the pumps and the fan on the external unit (TX5000U-KLC). For configurations TX10000U-KLC or higher, the module is configured as “slave”, is the CCU who runs everything and the LEDs indicate: A - no indication, B - internal fans lit, C - no indication
17	POWER SUPPLY 1-2-3	When the LED is yellow indicates the presence of an anomaly in one or more in power supply, the module continues to operate but the power is reduced. When the LED is red indicates that its power supply is broken, the module continues to operate but the power is reduced.
18	FAULT	This red LED indicates a fault (the amplifier is blocked, and required the intervention of an operator for the restoration)
19	FUSES	Yellow LED that indicates the presence of one or more blown fuses on the board fuses,see cap. 8.17
20	FOLDBACK	Yellow LED, indicating that the foldback function is active (automatic reduction of the distributed power,run by the CPU inside the module).
21	RF PWR ADJ	Trimmer adjustment of the output power of a single module, this control operates by varying the VPA pallet mosfet
22	WARNING	Yellow LED, indicates that the coolant level in the tank the external unit has reached the minimum level (only active for transmitter TX5000U-KLC)
23	LOW	Red LED indicates that the tank of the external unit is empty**, and requires the immediate stopping of the machine** (only active for transmitter TX5000U-KLC)
24	FLOW	Red LED indicates a malfunction due to the absence of coolant flow (only active for transmitter TX5000U-KLC)

7.3 Rear panel

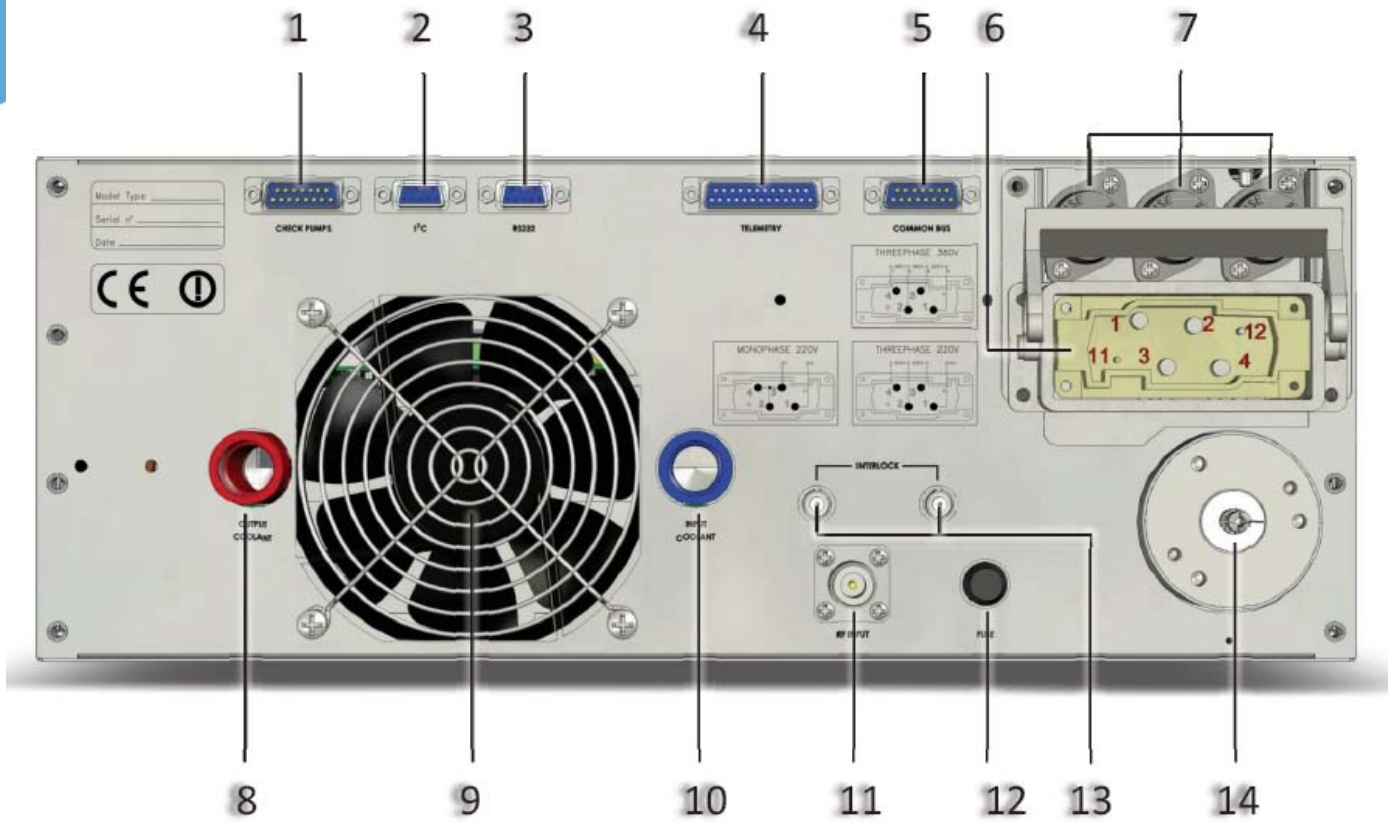

1	PUMPS INTERFACE	DB15 connector for the management of the pump control board (only used in the transmitter TX5000U-KLC)
2	I2C BUS	DB9 connector for I2C bus networking
3	RS232	DB9 connector to interface with external devices or factory programming
4	TELEMETRY	DB25 telemetry connector
5	COMMON BUS	DB15 connector for interfacement with other equipment, for example, the CCU
6	MAINS CONNECTOR	Plug for mains power supply
7	MAINS FUSE	Protection fuses of the power supplies 1,2 and 3
8	OUTPUT COOLANT	Hydraulic connector for the output of liquid cooling (1/2 “)
9	AIR FLOW	Grill for the ventilation fl ow passage
10	INPUT COOLANT	Hydraulic connector for the input of liquid cooling (1/2 “)
11	RF IN	RF input connector (“N” type)
12	FUSE	Protection fuse for the service section
13	INTERLOCK	BNC connectors to inhibit an external device, as an exciter. In case of fault, the inner connector is shorted to ground
14	RF OUT	RF output connector (7/8” EIA flange)

7.4 Software

This chapter describes the ways in which the microprocessor controls the amplifier and how the user may interact with the software.

The fi gure in the follow shows the overall software user interface diagram.

Note: the user may issue commands to the equipment only when in LOCAL mode by means of the selector. Otherwise the user may only read the parameters and not change them.

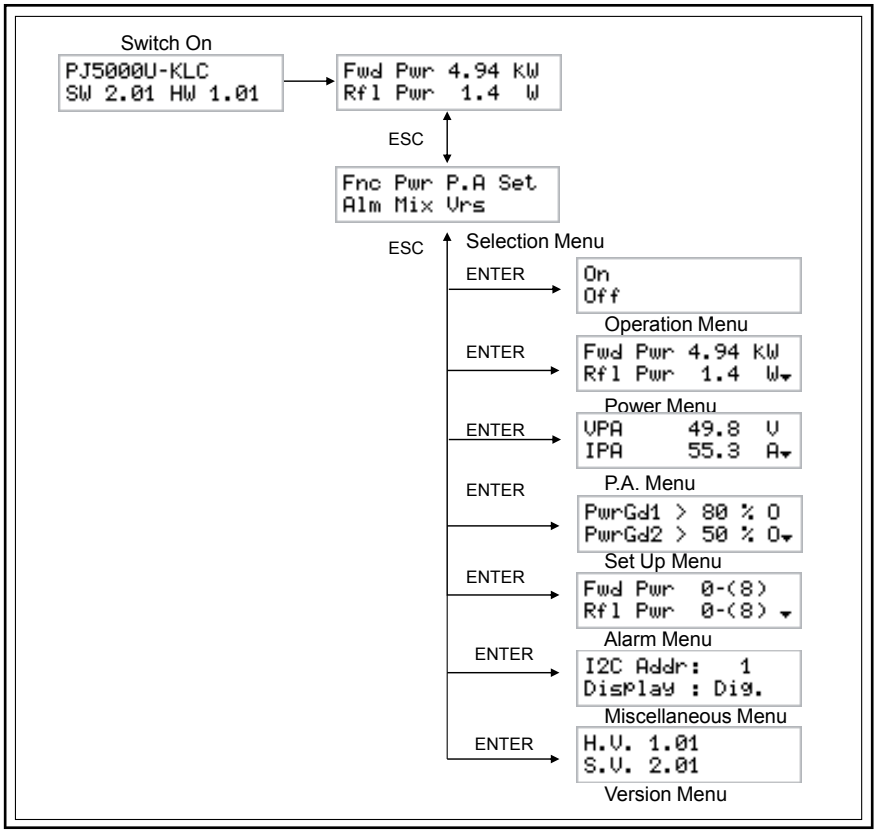

When turned on, the LCD shows the introductory screenful with the equipment's software and hardware versions.

A few seconds later the main screenful is displayed indicating the forward and reflected power values. The following figure shows the complete aspect of this screen, as will the next (visible on the display are only two rows at a time, use the UP 'and DOWN' to display all information):

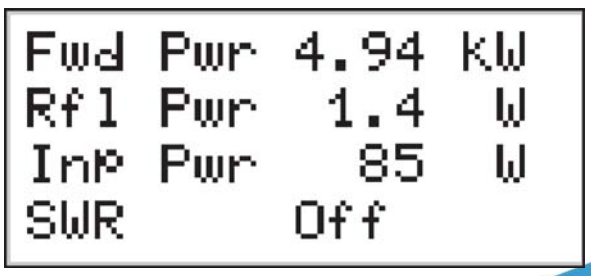

Press the ESC key to view the selection screenful from which to access all the menus:

To access one of the submenus select its name (which is underlined by a blinking cursor) using the RIGHT or LEFT keys and then press the ENTER key.

Take note that certain parameters, which are measured and shown to the user, might not be available in a few cases. This occurs when, for physical reasons, the measured vales are not signifi cant for control software internal use.

When the value of a parameter is not available for the aforesaid reason, symbol “===” appears on the display in lieu of the value.

7.4.1 Operating Menu (Fnc)

Turn the power amplifi er ON or OFF via this menu..

When the amplifi er is turned OFF, the internal conductor of the INTERLOCK connector is set to ground so as to force the connected exciter to a stand-by condition (this takes place only if the exciter features the interlock option, like those produced by RVR, and if the associated connector is connected to the amplifier).

When the amplifi er is turned OFF the software program waits 5 minutes for the machine to cool down and then the fans and pumps turn OFF.

7.4.2 Power Menu (Pwr)

This screen, made up of several lines that may be scrolled through using the UP and DOWN keys, displays all the measurements associated with the behaviour of the amplifi er’s power section:

- Forward Power (Fwd Pwr)
- Reflected Power (Rfl Pwr)
- Input Power (Inp Pwr)
- SWR (Standing Wave Ratio)

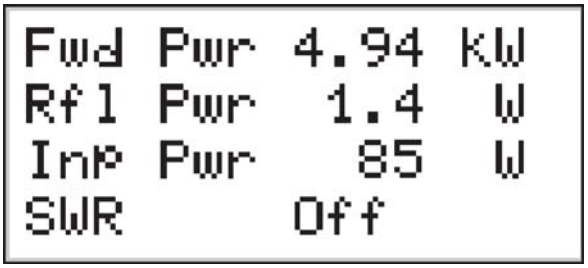

7.4.3 Power Amplifier Menu (P.A.)

This screen, consisting of several lines that may be scrolled through by using the UP and DOWN keys, displays all the measurements associated with the RF amplifi er of the equipment:

- Voltage (VPA)
- Current (IPA)
- Temperature
- Power Supply Voltage (Mains-percentage variation as compared to the nomina voltage)
- Efficiency

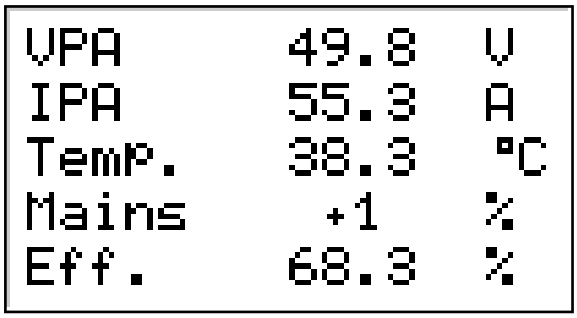

7.4.4 Warning threshold setting menu (Set)

As mentioned in the introduction the amplifi er offers three settable warning thresholds. Each one is compared with the level of one of the machine's operating parameters. The results of the comparison are available on the telemetry connector, on the contacts of the optional external telemetry card and may be read on the display as "O" (open, i.e. false result) or "C" (closed, i.e. real result).

The three settable thresholds (Power Good) refer to the emitted power level.
The thresholds are expressed in terms of percentage of full scale of greatness considered.

The limit voltages of the quantities monitored by the warning thresholds for are the follows:
- Forward Power 5000 W
- Forward Power 300 W

Proceed as follows to change the values of the warning thresholds:
- Select the line to be changed (with the UP and DOWN keys)
- Press the ENTER key
- Change the threshold value (UP and DOWN keys)
- Press ENTER to confirm

The figure below shows a configuration example of this menu.

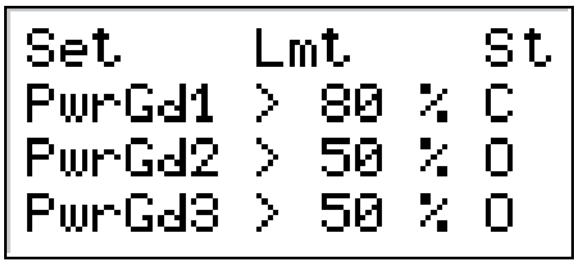

In this example the alarm thresholds are as follows:
- PwrGd1 4000 W (80% x 5000 W)
- PwrGd2 2500 W (50% x 5000 W)
- PwrGd3 150 W (50% x 300 W)

7.4.5 Alarm Menu (Alm)

This menu provides information about the status of the amplifi er's built-in protection system.

It consists of a certain number of lines each of which contains the name of the variable controlled by the protection system and the type of intervention carried out by the system.

Said intervention may be as follows: X - (Y), Wait, or Dis. (Disabled).

The aspect of this menu is as follows:

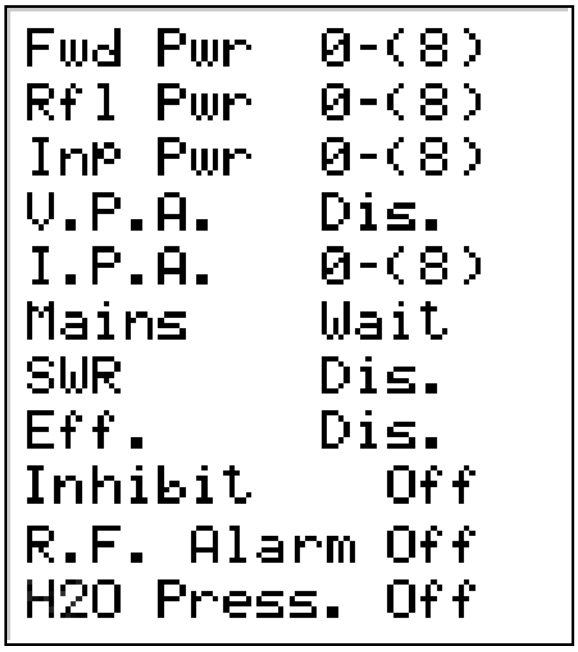

The task of this menu is essentially to help the technician in identifying the possible causes of any malfunction.

7.4.6 Miscellaneous Menu (Mix)

In this menu the user may:
- set the address in the serial bus connection, type I2C
- set the main menu display mode
- exchange the operation pump

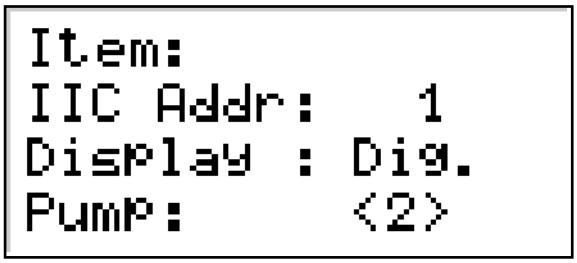

The network address I2C is very important when the amplifi er is connected in an RVR transmission system that envisages the use of this protocol. Do not change it for any reason whatsoever.

The main menu may be displayed either in Digital mode (this is the standard mode) or Analog mode:

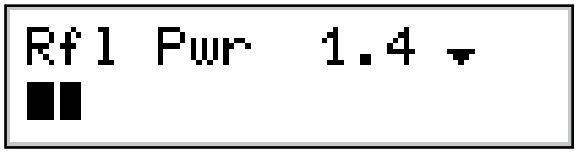

In the analog display mode the bar at the bottom shows the instant refl ected power level, while the small triangle indicates the 100% of full scale of the bar.

This type of display might be useful when a device to be tuned is connected to the amplifi er's output such as a cavity.

WARNING: this procedure for the exchange both manual and automatic pumps occurs only if the module is configured as "master" and is single (TX5000U-KLC). From the transmitter TX10000U-KLC forward all this is handled only by the CCU.

The pump is exchanged automatically every time you switch off and subsequently reswitch on the equipment. In case you never switch off the equipment, the pump is exchanged automatically every 10 days of normal operation.
The operation of pumps exchange is necessary for the regular functioning of the same.

In case of a fault on pump pressure, and then an interruption of the cooling flow, after 10 seconds is recorded by the machine which starts the operations of exchange pumps.

Note: the delay of 10 seconds is necessary to prevent the record of false positives as a momentary pressure drop due to air bubbles in the cooling system.

The machine will continue to exchange the pumps every two minutes, until the situation that caused the alarm is resolved.

After six minutes the equipment goes in a WAIT condition, and will be reported through the red YELLOW on the front, in the meanwhile the machine will continue to exchange pumps every 2 minutes in order to resolve the alarm condition.

Note: Please resolve as soon as possible the condition that brought the equipment to the alarm, this to restore the correct operation. Check the LEDs indicators on the front panel, or check the ALARM menu, to see which alarm condition has brought to the halt of the machine.

In the event that only one of two pumps work correctly, and then exchange pumps can not be done, will be reported into display PUMP FAILED after 3 minutes of the failed attempt.

Note: Please resolve as soon as possible replacing the faulty pump.

7.4.7 Version Menu (Vrs)

This screenful shows the software version and the hardware version of the equipment.

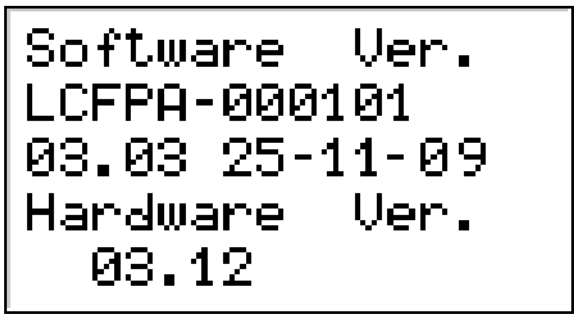

7.5 Connector Description

7.5.1 Telemetry

Type: DB25 female

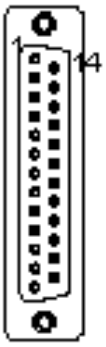

1	Internal SWR	Disable
2	Tensione dell' amplificatore di potenza RF	3,9V x 50V
3	GND	GND
4	Reflected Power	4.3V x 300W
5	Interlock	
6	Check Pumps	
7	GND	GND
8	"On" Command	
9	Set 1	
10	WAIT	
11	Reset alarm	
12	OFF	
13	Interlock	
14	Temperature	3.9V x 100°C
15	RF power amplifier current	3.9V x 200A
16	Forward Power	4.3V x F.S.
17	FAULT	
18	Set 3	
19	Input power	3.9V x 150W
20	"OFF" Command	
21	GND	GND
22	Set 2	
23	LOC	
24	+Vcc	
25	ON	

7.5.2 RS 232

Type: DB9 female

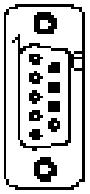

1	NC
2	TX_D
3	RX_D
4	Internally connected with 6
5	GND
6	Internally connected with 4
7	Internally connected with 8
8	Internally connected with 7
9	NC

7.5.3 I²C

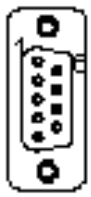

Type: DB9 female

1	NC	
2	SDA	Serial Data
3	SCL	Serial Clock
4	NC	
5	GND	GND
6	NC	
7	NC	
8	NC	
9	NC	

7.5.4 Common Bus

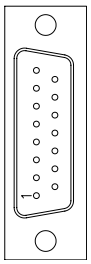

Type: DB15 male

1	GND
2	485+
3	485-
4	GND
5	ON OFF C
6	INP PWR
7	ST BY
8	IRQ
9	GND
10	PWR REG
11	GND
12	NC
13	NC
14	NC
15	NC

7.5.5 Pumps Interface

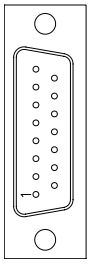

Type: DB15 male

1	NC	
2	ON	Pumps 1 ON/OFF command
3	GND	
4	NC	
5	ON	Pumps 2 ON/OFF command
6	GND	
7	NC	
8	NC	
9	GND	
10	GND	
11	FAN	Radiator fan check
12	H2OWARN	Minimum level of coolant in the tank
13	H2OMIN	Empty tank
14	FLUX	Coolant flow
15	NC	

8. PJ5000U-KLC wiring diagrams

8.1 Top view

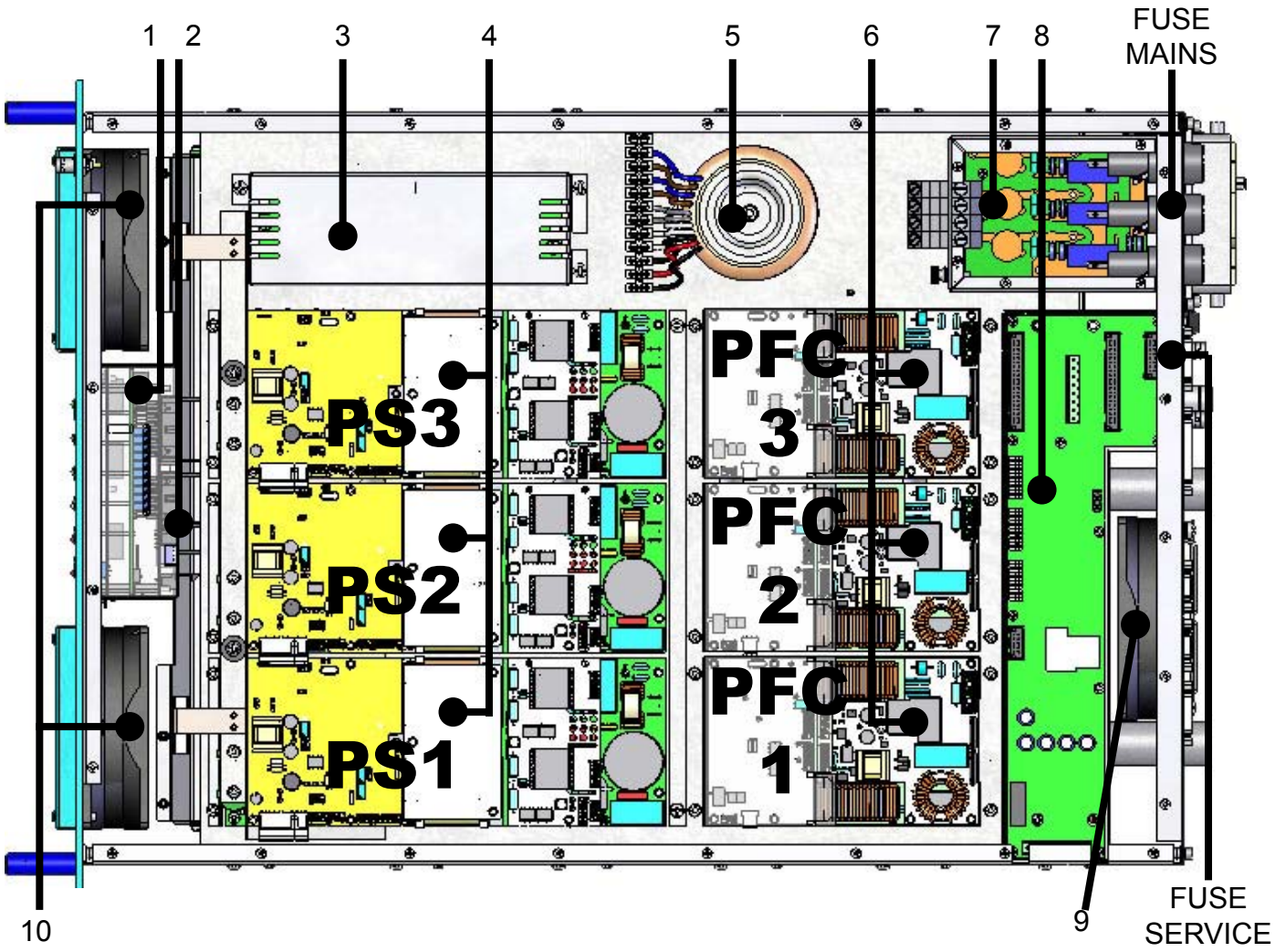

1	ProtF board	PROTPJ154
2	Addon board	SL154IN2001
3	Low-Driver Power board	SLDR0066R02V01C
4	Power supply	KPSL4280.LC
5	Services transformer	TRFSERVM5KWH2O
6	PFC	KPFCPSL4280.LC
7	Surge protection board	SL046SR1002
8	PS-RF interface board	SLINPSP2K07
9	Rear fan air intake	VTL9GL1224J102
10	Front fans air injection	VTL9G1224J102

FUSE MAINS

380 V THREEPHASE	3 X 25 A
220 V THREEPHASE	3 X 32 A

FUSE SERVICE

380 V THREEPHASE	1 X 6,3 A
220 V THREEPHASE	1 X 6,3 A

8.2 Bottom view

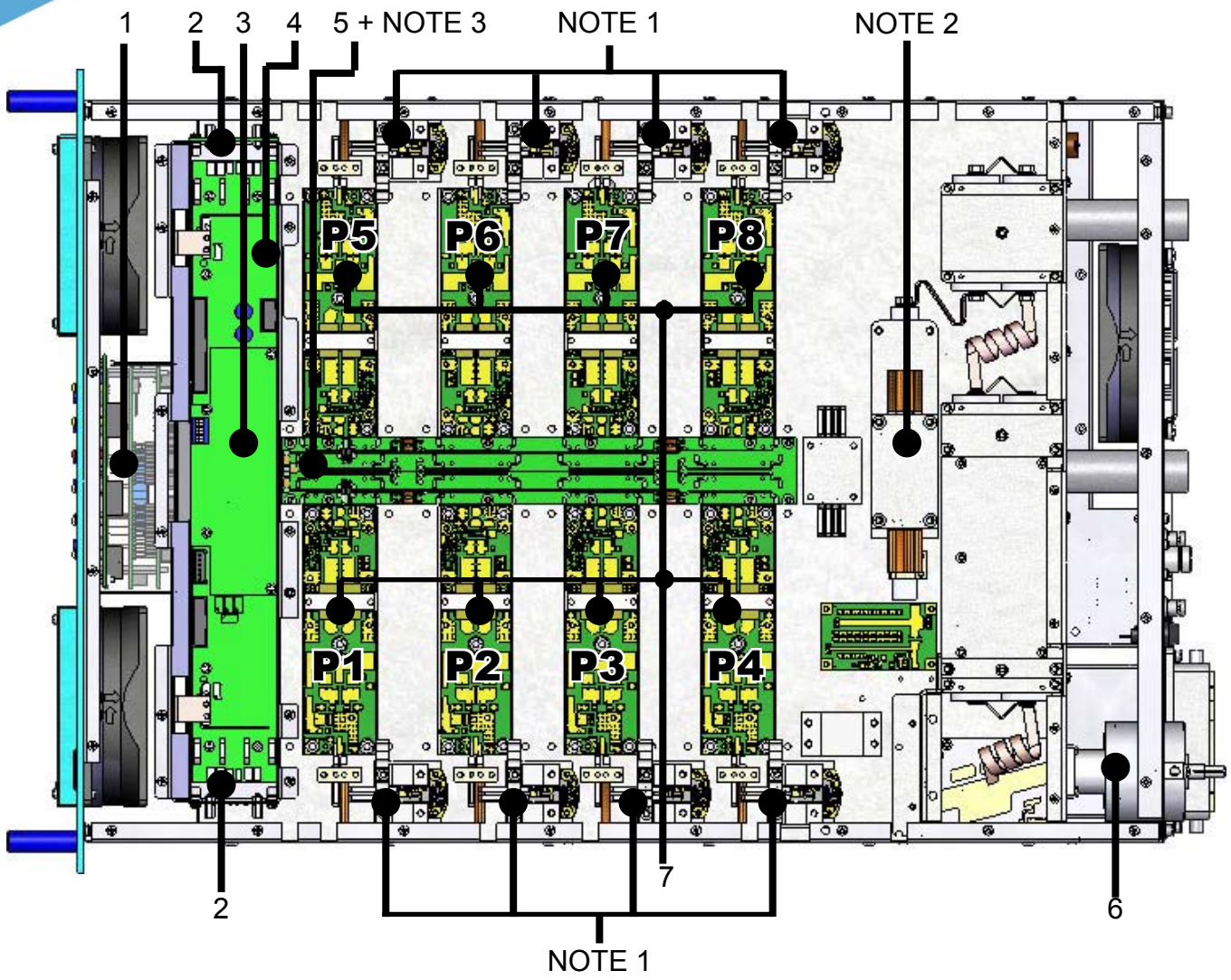

1	LED board	SL154LD1001
2	Pass-Throught board	SLFILPSPJ2K1
3	CPU board	CPUPJ2KMC
4	Bias board	SLMTPRTPJ4K1
5	8 way splitter + bias distribution (see NOTE 3)	KKSPL245A
6	Power Meter FWD e RFL board	SL042MT1501
7	Amplifiers module - pallet mosfet	KKFIN237H

NOTE 1 - COMBINER

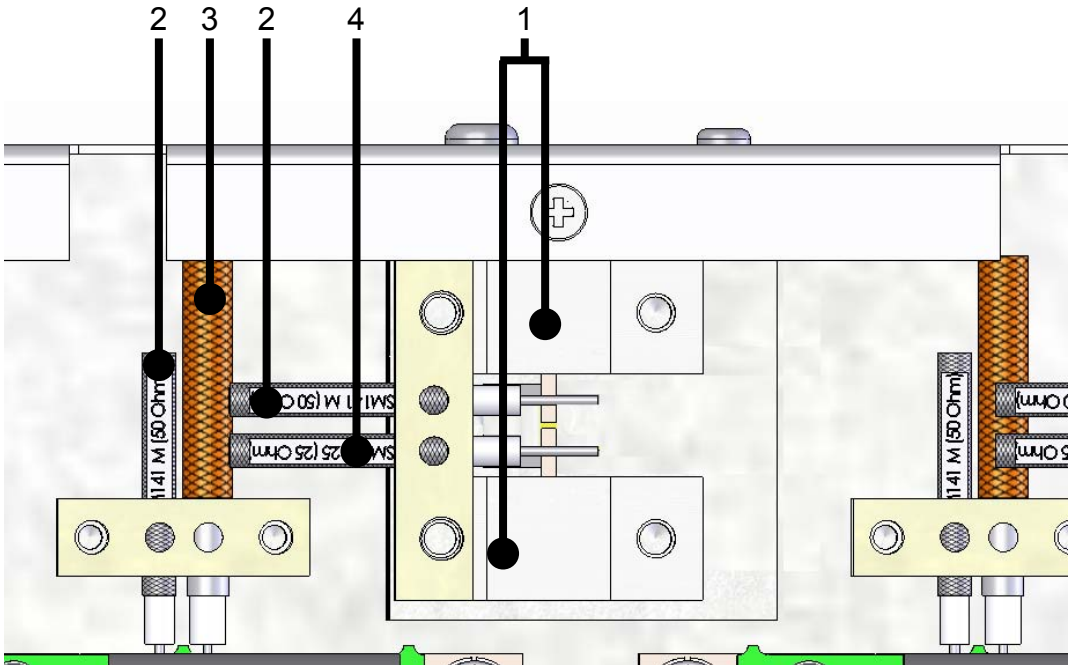

1	KDI resistor 100 Ω 500 W (termination)	RDT500J0100
2	50 Ω comformable cable	CAVSM141-M50
3	RG-302 75 Ω cable	CAVRG302-75
4	25 Ω comformable cable	CAVSM141-25

NOTE 2 - COMBINER/OUT FILTER

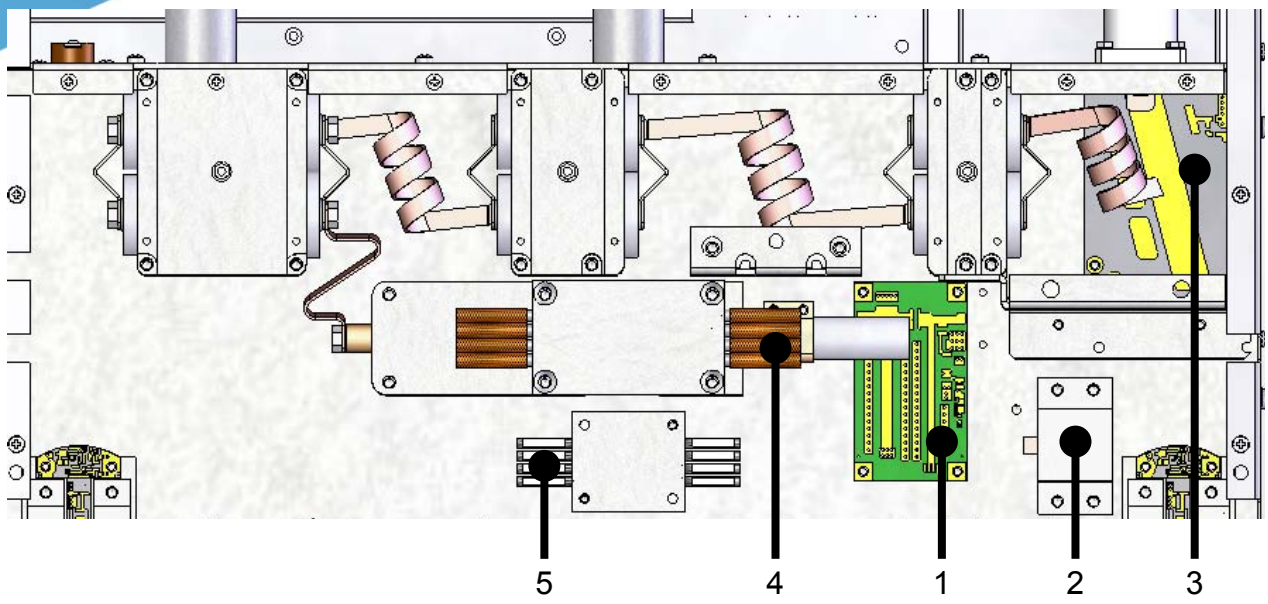

1	Harmonics Pick-Up board	CSFI0350R1
2	KDI resistor 50 Ω 800 W (termination)	RDT800J0050H
3	Printed circuit board	CSOP0338R2
4	RG-302 75 Ω cable	CAVRG302-75
5	25 Ω comformable cable	CAVSM141-25

NOTE 3 - SPLITTER + BIAS DISTRIBUTION

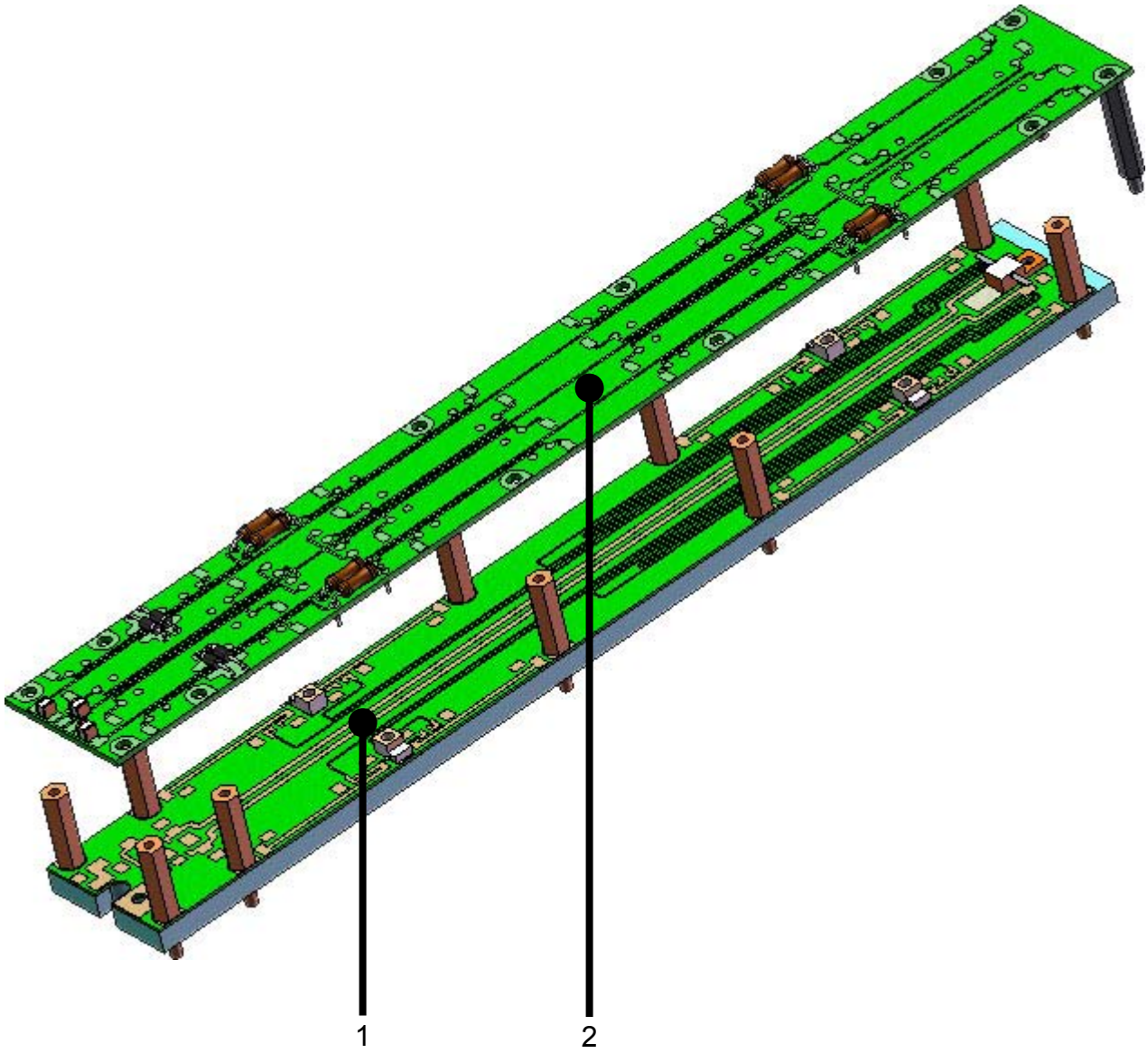

1	8 way splitter	SLSP0387R01V01	} KKSPL245A
2	Bias distribution 8 PA RF	SLIN0388R01V01	

8.3 PS section wiring diagrams

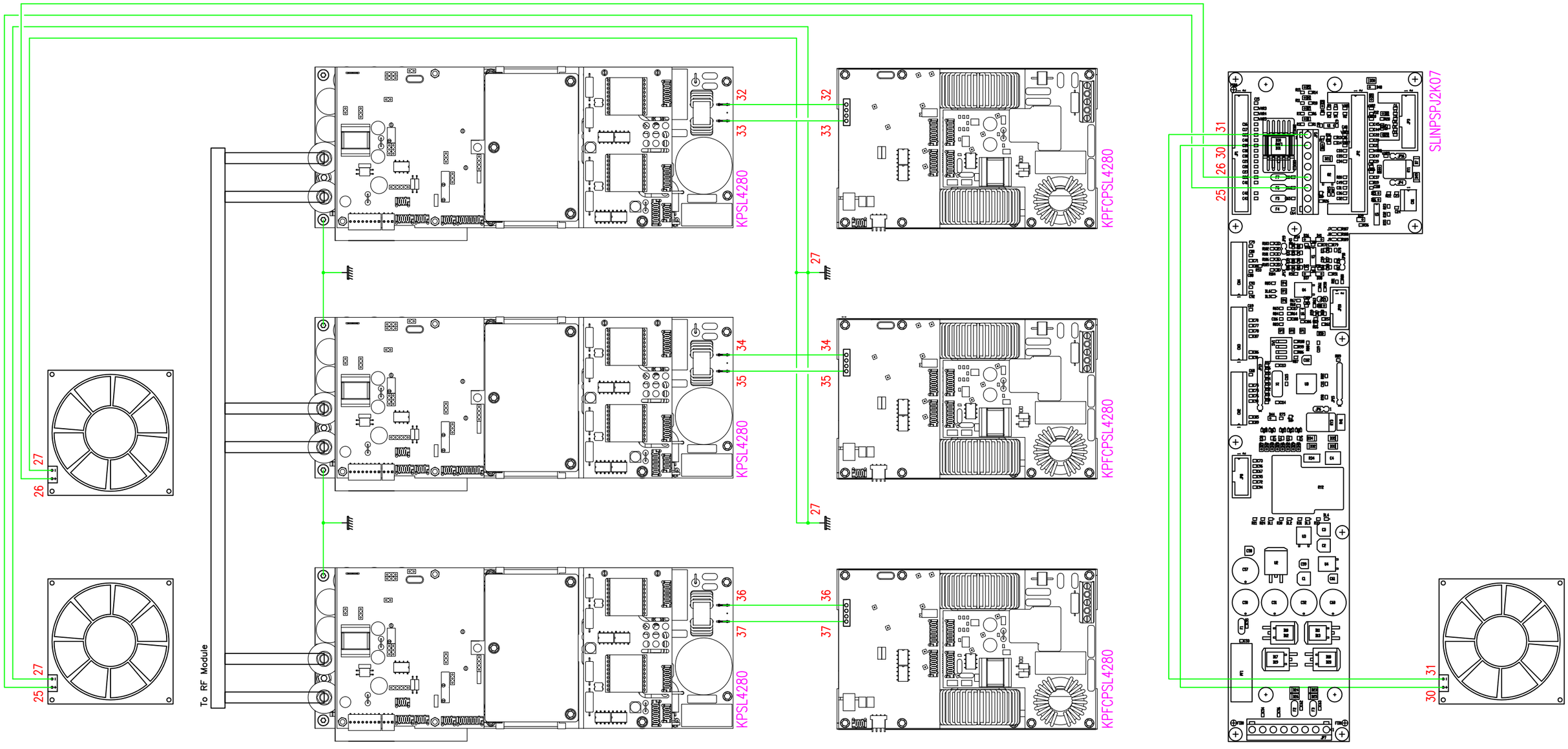

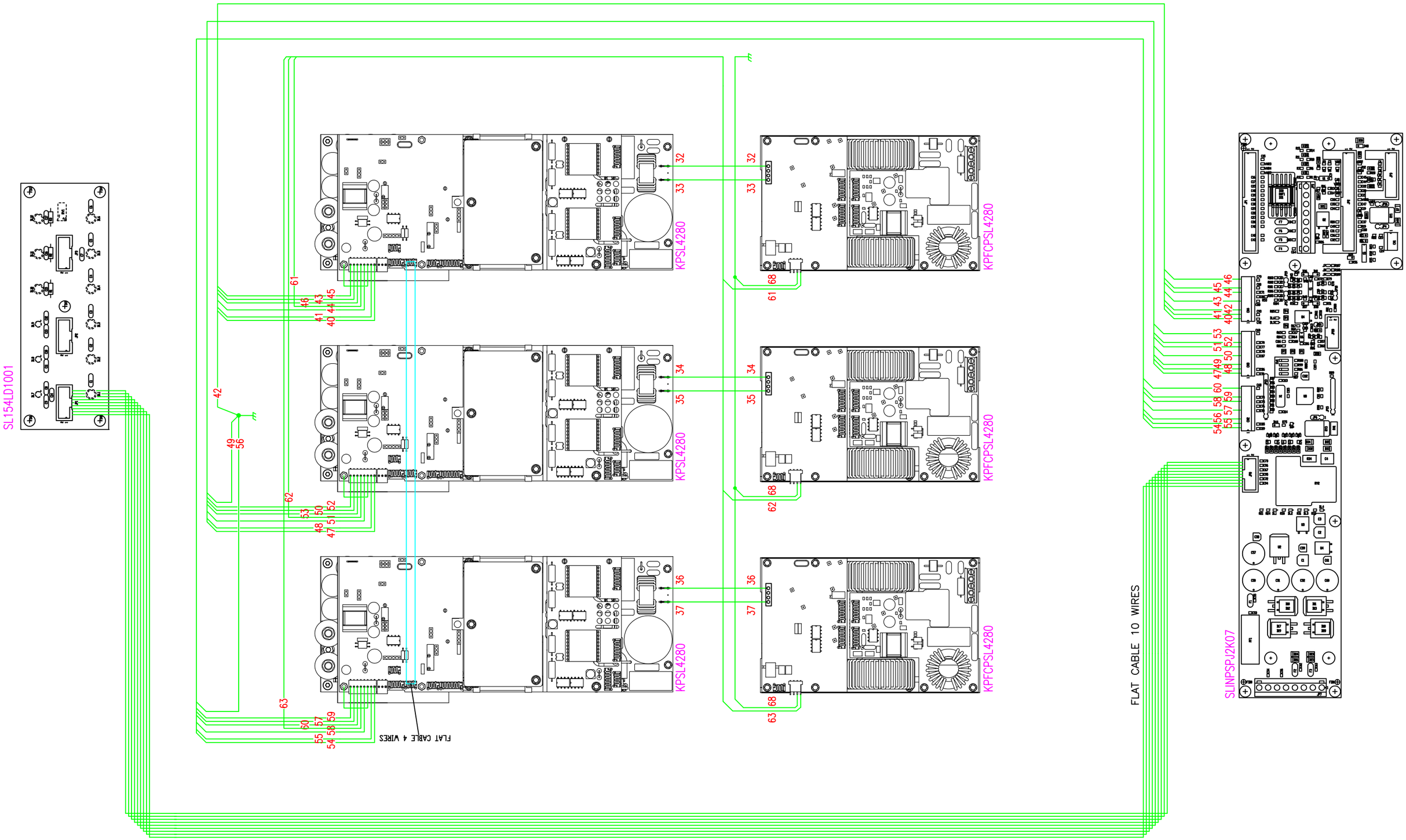
SL154LD1001
KPSL4280
KPFCPSL4280
SLINPSPJ2K07
FLAT CABLE 4 WIRES
FLAT CABLE 10 WIRES

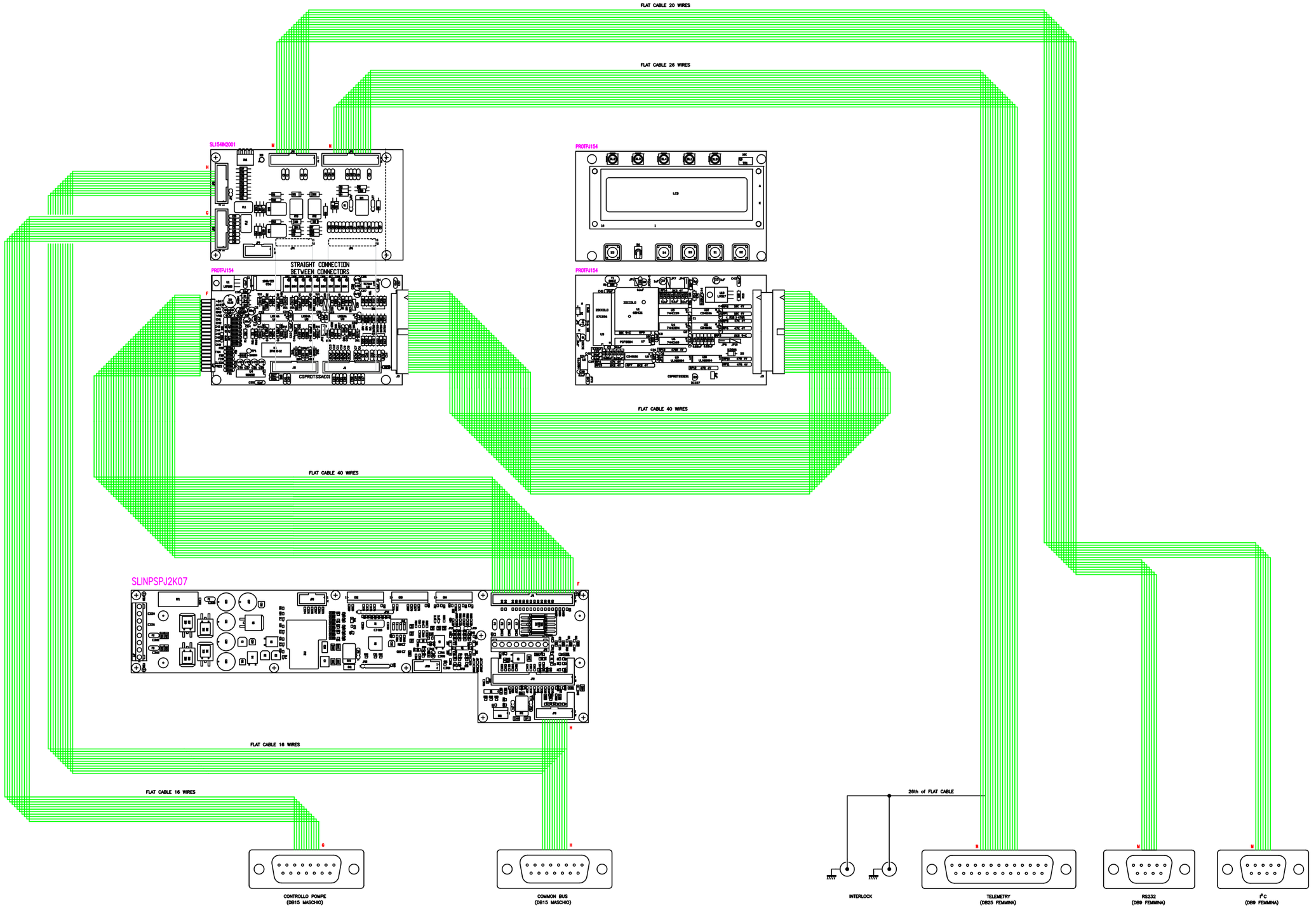
FLAT CABLE 20 WIRES
FLAT CABLE 26 WIRES
SL154N2001
PROTPJ154
LCD
STRAIGHT CONNECTION
BETWEEN CONNECTORS
PROTPJ154
PROTPJ154
CSPROTSSAE01
FLAT CABLE 40 WIRES
FLAT CABLE 40 WIRES
SLINPSPJ2K07
FLAT CABLE 16 WIRES
FLAT CABLE 16 WIRES
26th of FLAT CABLE
CONTROLLO POMPE
(DB15 MASCHIO)
COMMON BUS
(DB15 MASCHIO)
INTERLOCK
TELEMETRY
(DB25 FEMMINA)
RS232
(DB9 FEMMINA)
I²C
(DB9 FEMMINA)

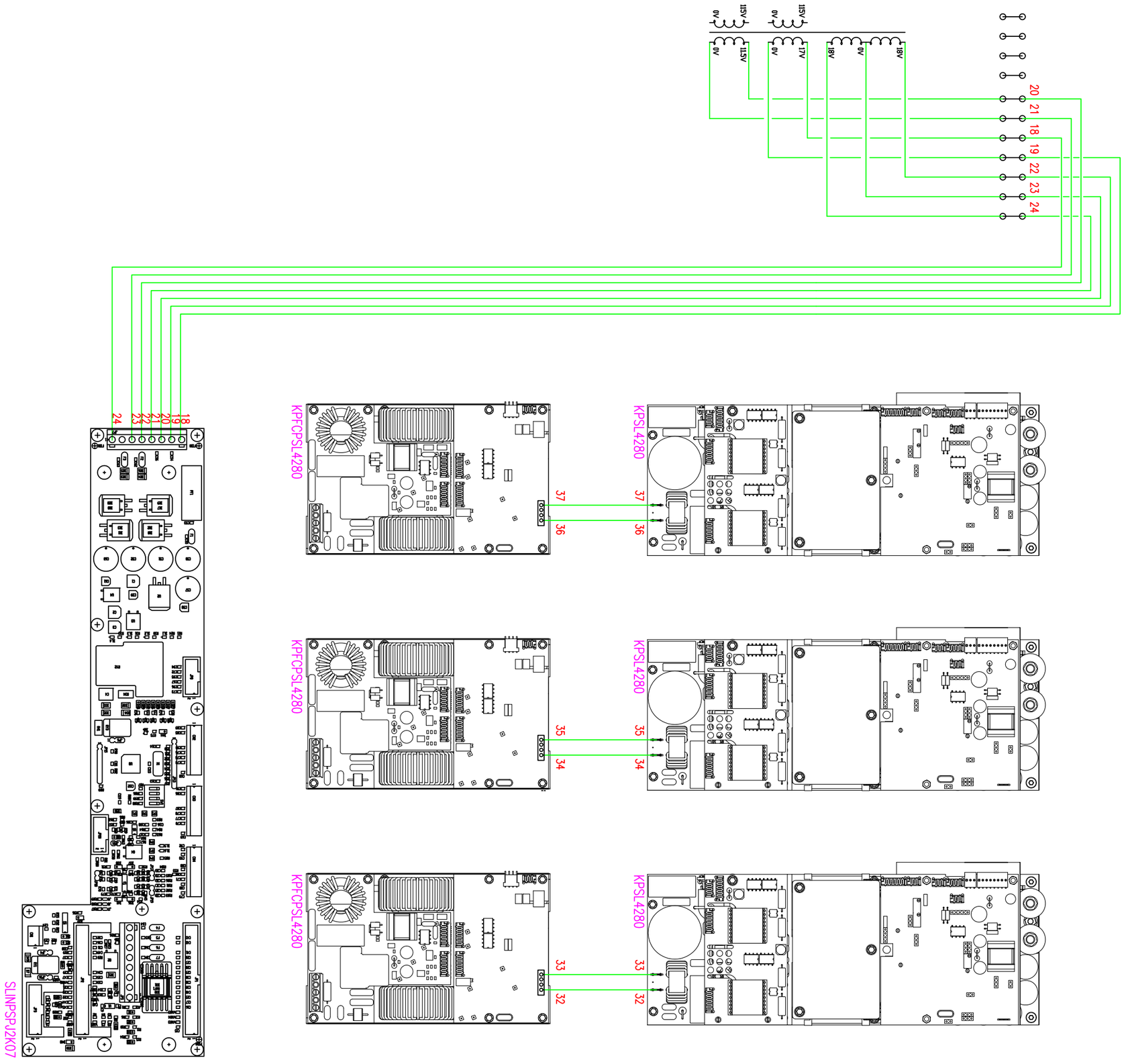
0V
115V
0V
115V
0V
115V
0V
17V
18V
0V
18V
20
21
18
19
22
23
24
24
23
22
21
20
19
18
KPFCPSL4280
KPSL4280
37
36
37
36
KPFCPSL4280
KPSL4280
35
34
35
34
KPFCPSL4280
KPSL4280
33
32
33
32
SLINPSPJ2K07

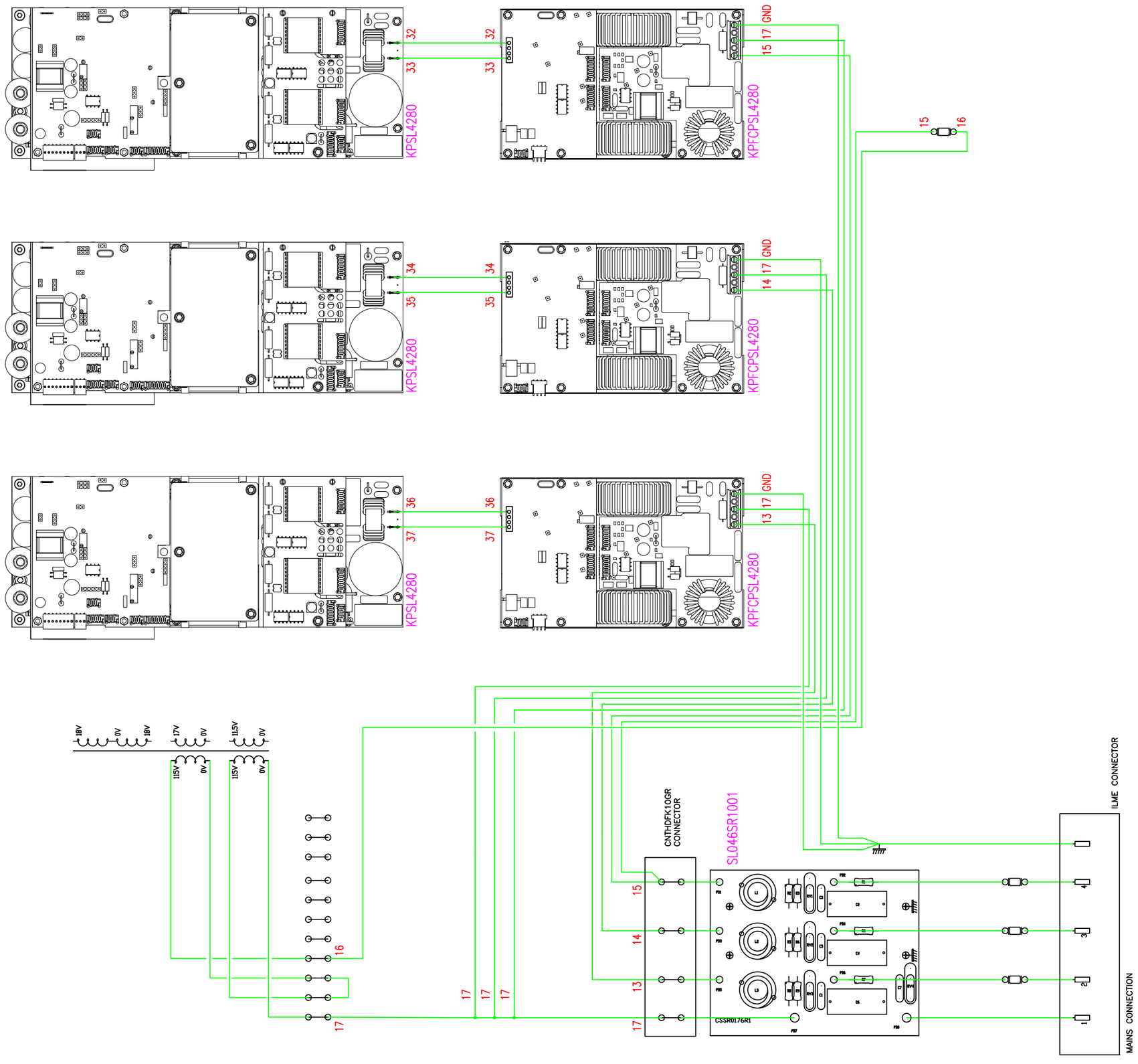
KPSL4280
KPFCPSL4280
32
33
34
35
36
37
GND
15
16
17
14
13
18V
0V
17V
11.5V
115V
CNTHDFK10GR
CONNECTOR
SL046SR1001
CSSR0176R1
ILME CONNECTOR
MAINS CONNECTION

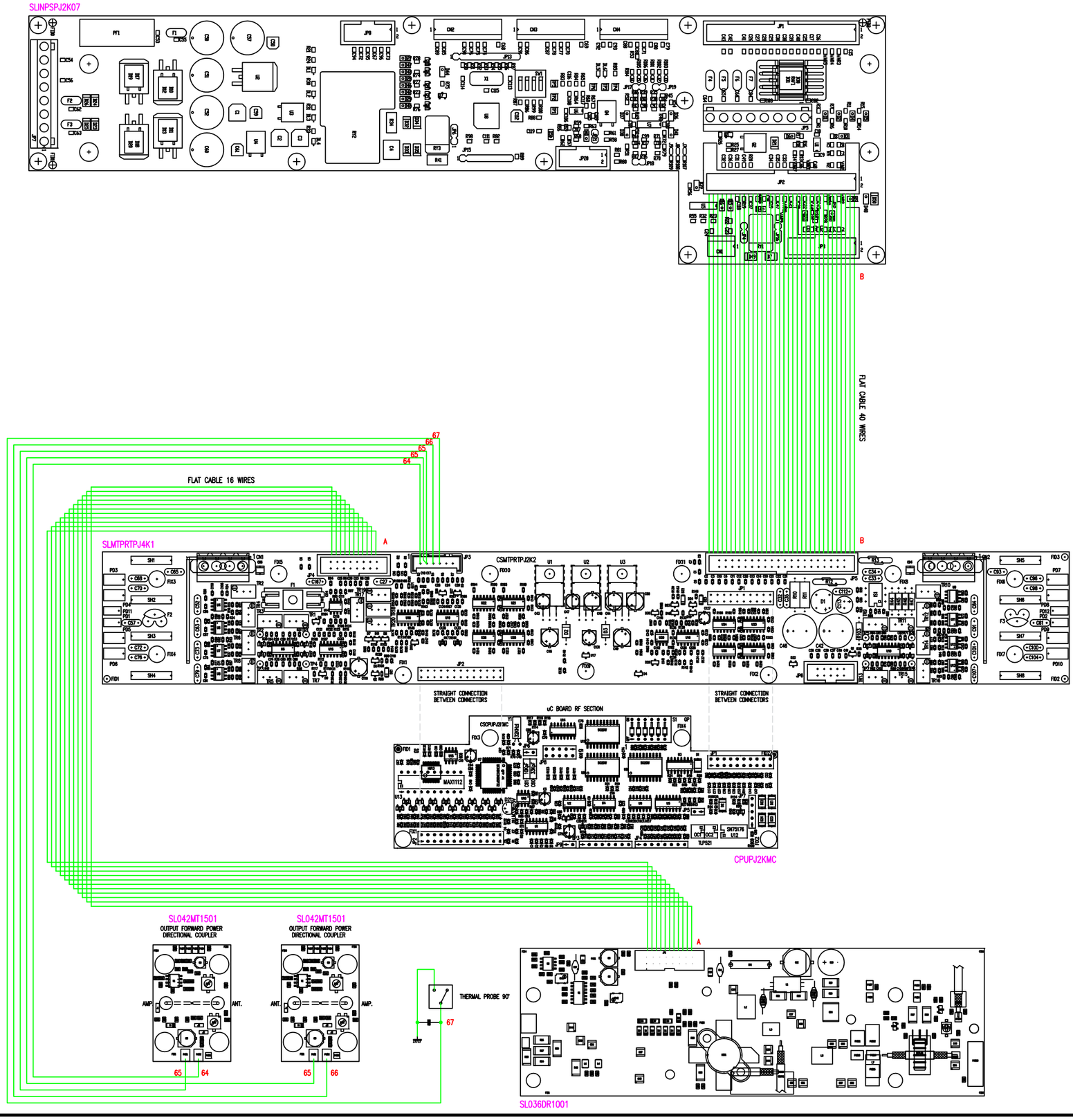
SLINPSPJ2K07
B
FLAT CABLE 40 WIRES
67
66
65
64
FLAT CABLE 16 WIRES
SLMTPRTPJ4K1
A
CSMTPRTPJ2K2
B
STRAIGHT CONNECTION BETWEEN CONNECTORS
STRAIGHT CONNECTION BETWEEN CONNECTORS
uC BOARD RF SECTION
CSCPUPJ2KMC
MAX1112
CPUPJ2KMC
SL042MT1501
OUTPUT FORWARD POWER DIRECTIONAL COUPLER
AMP.
ANT.
SL042MT1501
OUTPUT FORWARD POWER DIRECTIONAL COUPLER
ANT.
AMP.
THERMAL PROBE 90°
67
65
64
65
66
A
SL036DR1001

8.4 RF section wiring diagrams

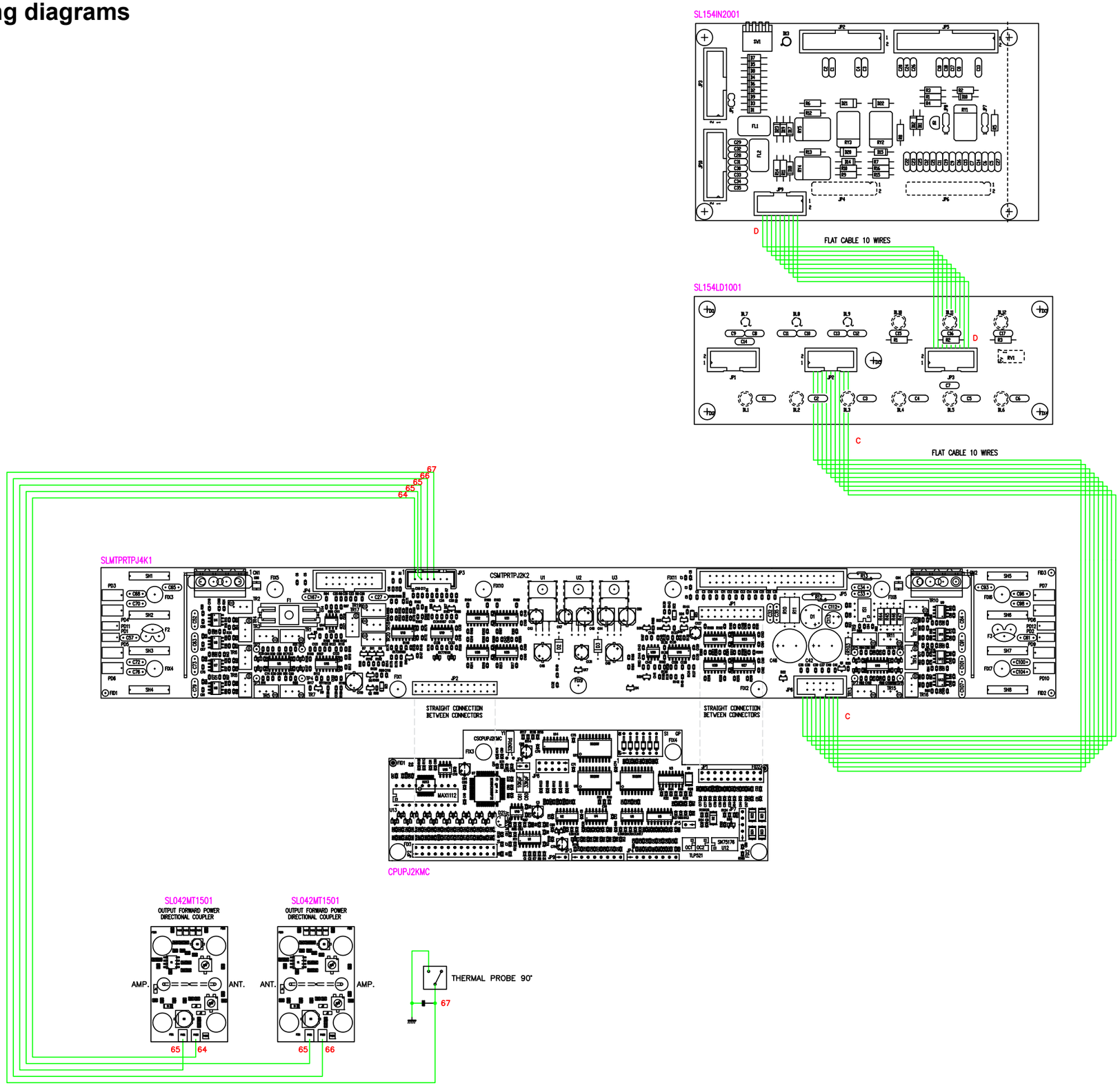

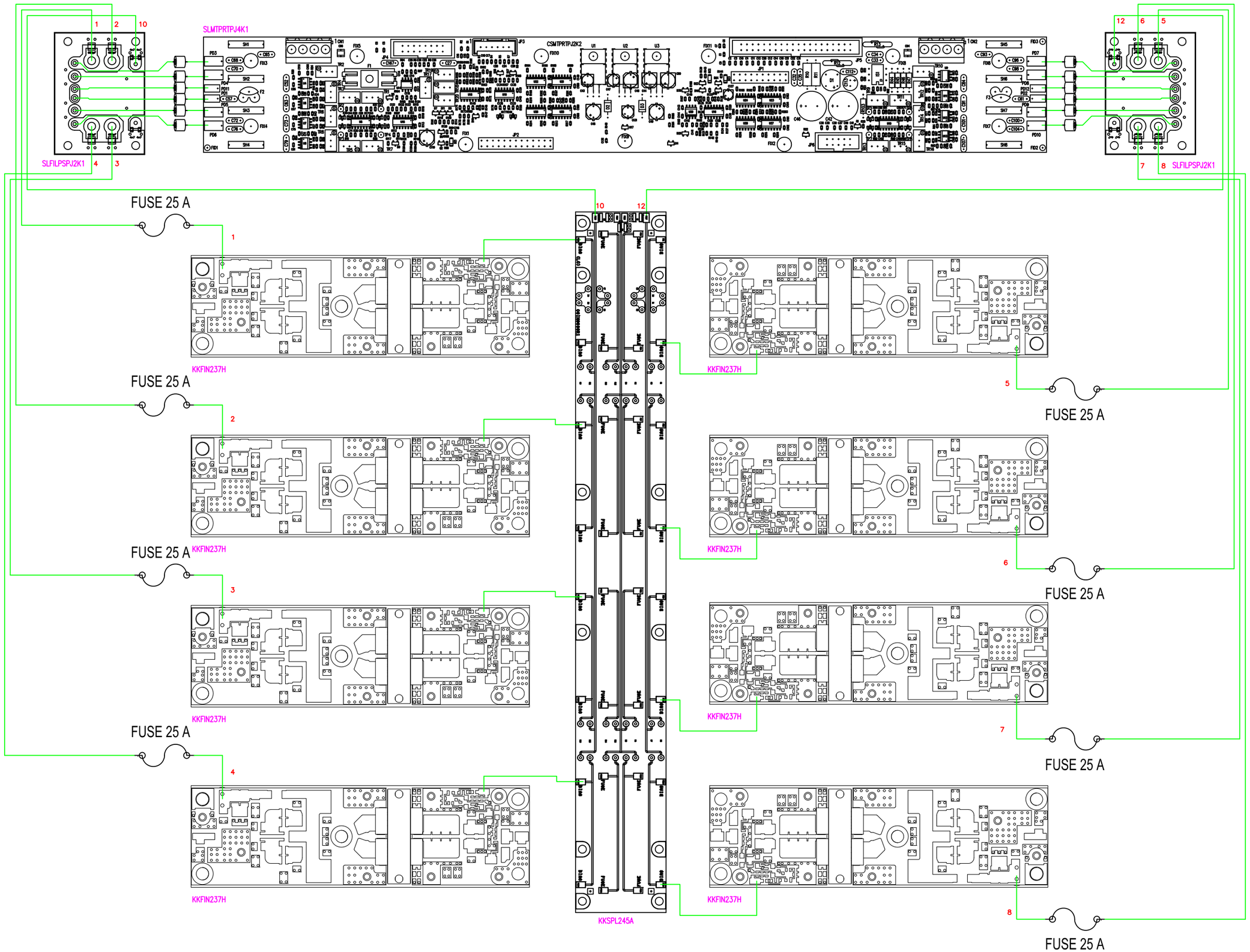
SLMTPRTPJ4K1
SLFILPSPJ2K1
CSMTPRTPJ2K2
SLFILPSPJ2K1
1
2
10
4
3
12
6
5
7
8
FUSE 25 A
KKFIN237H
KKSPL245A

8.5 ProtF board (PROTPJ154)

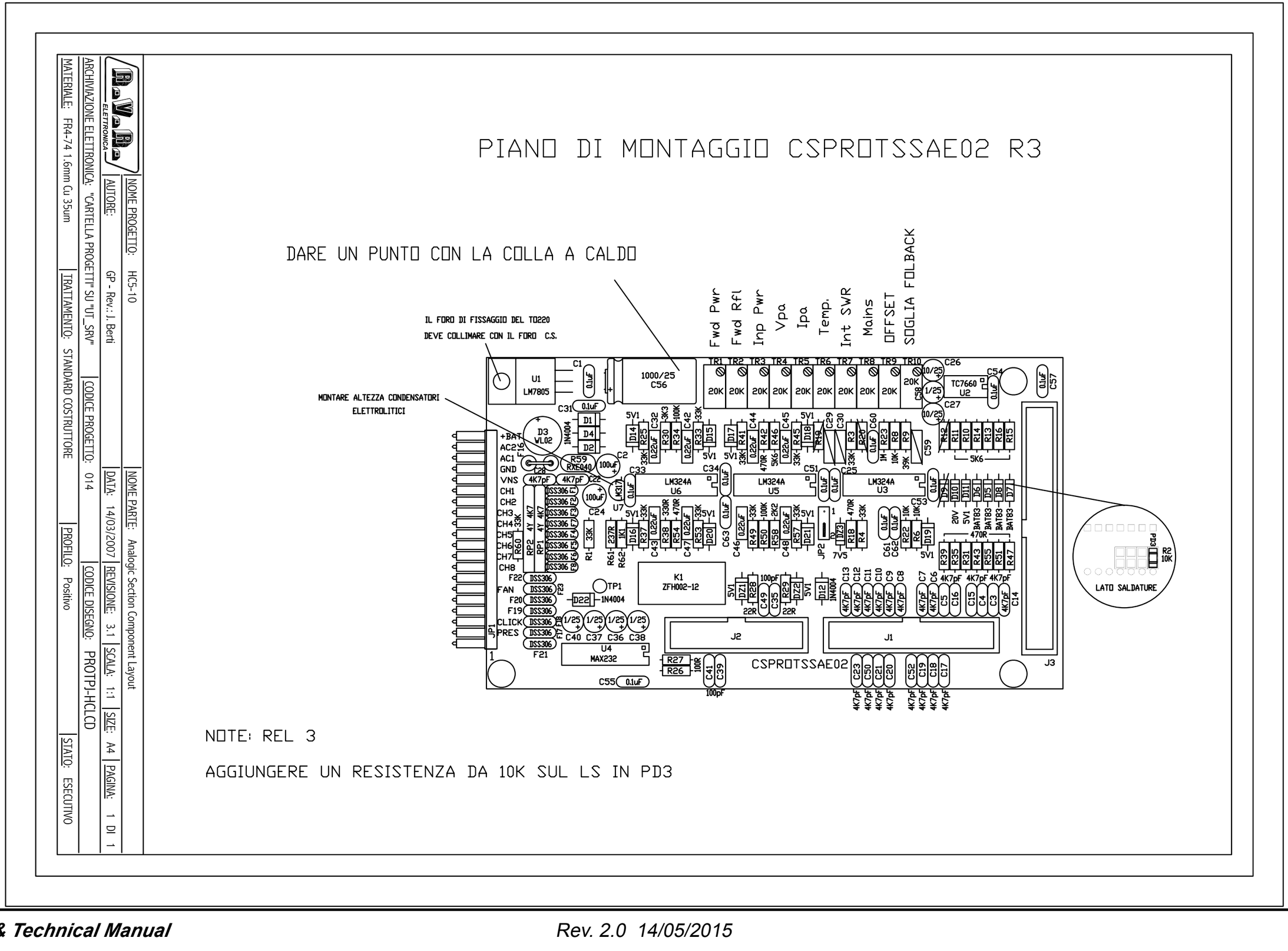

PIANO DI MONTAGGIO LATO SALDATURE

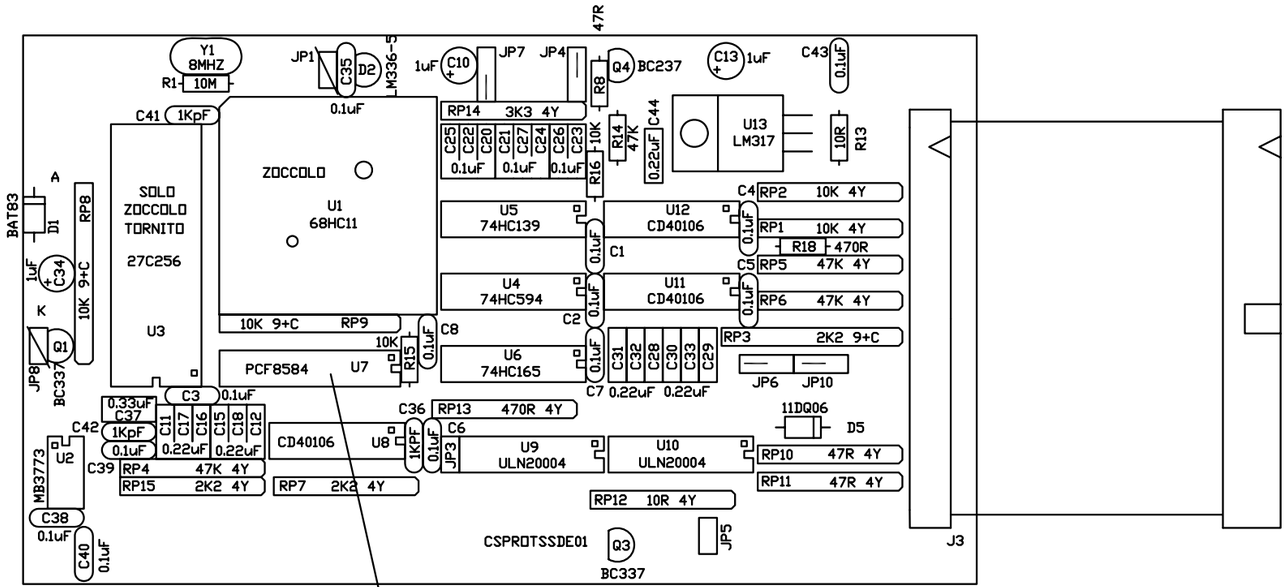

MONTARE CON ZOCCOLO

NOME PROGETTO:	HC5-10
AUTORE:	GP - Rev.: J. Berti
ARCHIVIAZIONE ELETTRONICA:	"CARTELLA PROGETTI" SU "UT_SRV"
MATERIALE:	FR4-74 1.6mm Cu 35um
TRATTAMENTO:	STANDARD COSTRUTTORE
NOME PARTE:	LCD Alarms Card Layout
DATA:	30/10/2008
REVISIONE:	1.1
SCALA:	1:1
SIZE:	A4
PAGINA:	1 DI 1
CODICE PROGETTO:	014
CODICE DISEGNO:	PROTPJ-HCLCD
PROFILO:	Positivo
STATO:	ESECUTIVO

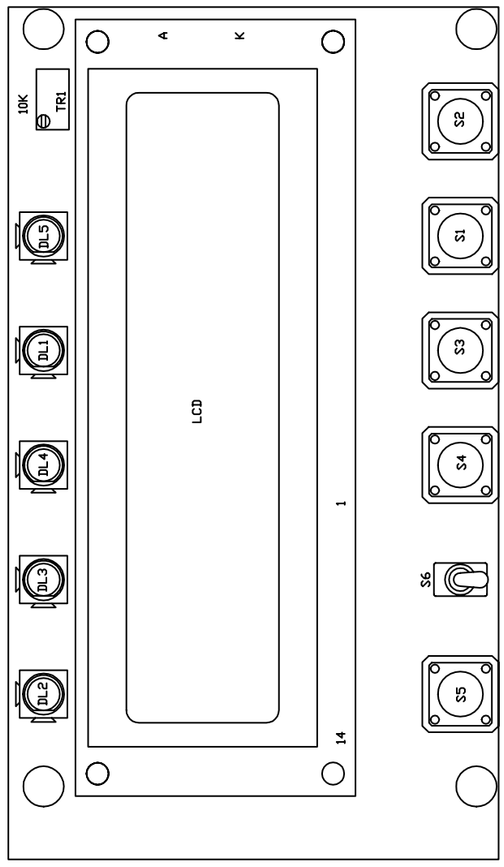

R.V.R. ELETTRONICA	NOME PROGETTO: HC5-10		NOME PARTE: CPU Display Section Component Layout				
	AUTORE: GP - Rev.: J. Berti		DATA: 11/02/2004	REVISIONE: 2.0	SCALA: 1:1	SIZE: A4	PAGINA: 1 DI 1
ARCHIVIAZIONE ELETTRONICA: "CARTELLA PROGETTI" SU "UT_SRV"		CODICE PROGETTO: 014		CODICE DISEGNO: PROTPJ-HCLCD			
MATERIALE: FR4-74 1.6mm Cu 35um		TRATTAMENTO: STANDARD COSTRUTTORE		PROFILO: Positivo		STATO: ESECUTIVO	

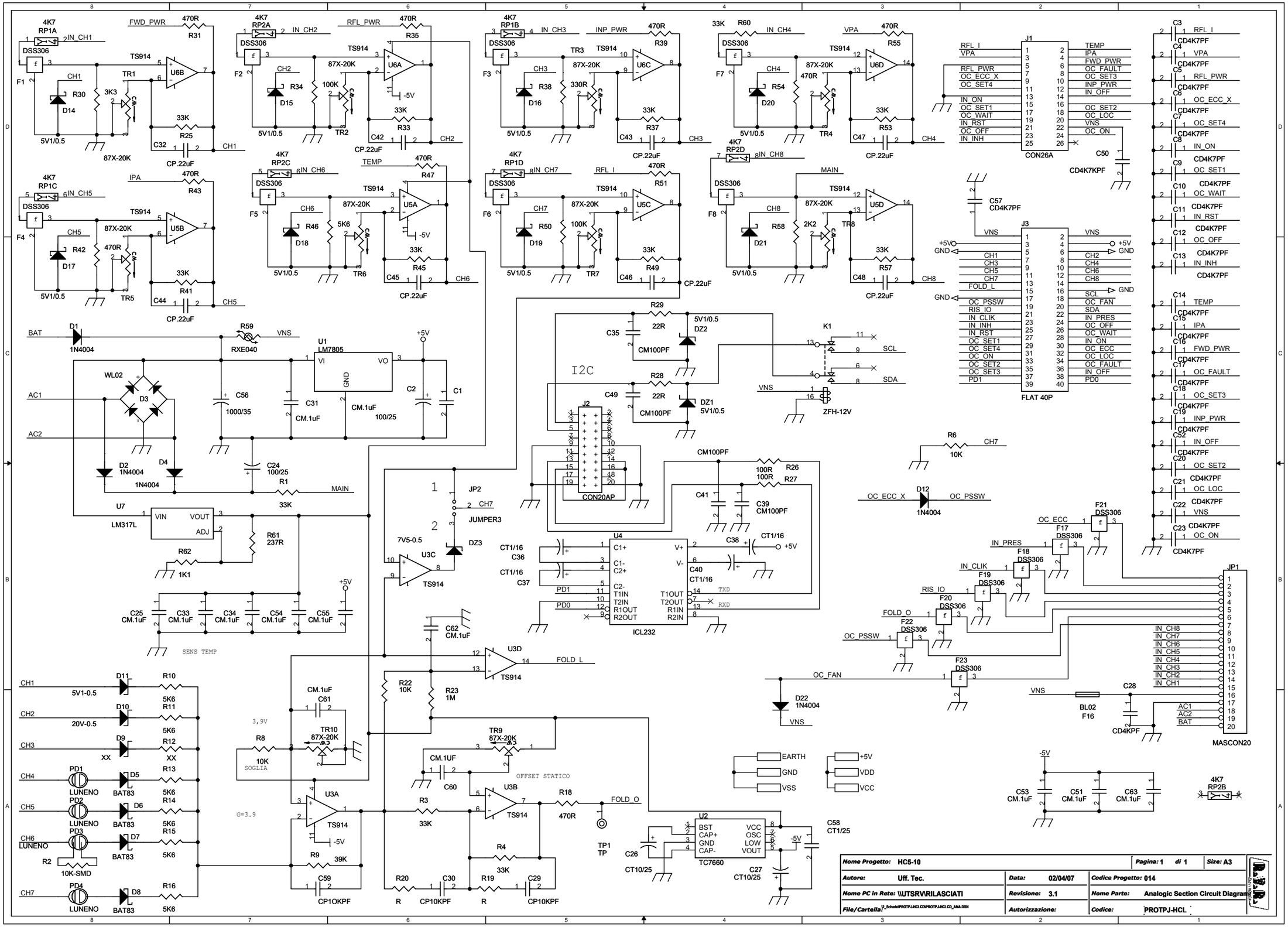
Nome Progetto: HC5-10
Pagina: 1 di 1
Size: A3
Autore: Uff. Tec.
Data: 02/04/07
Codice Progetto: 014
Nome PC in Rete: \\UTSRV\RILASCIATI
Revisione: 3.1
Nome Parte: Analogic Section Circuit Diagram
File/Cartella:
Autorizzazione:
Codice: PROTPJ-HCL
CON26A
FLAT 40P
CON20AP
ICL232
MASCON20
LM7805
LM317L
TC7660
I2C
SENS TEMP
SOGLIA
OFFSET STATICO
EARTH
GND
VSS
+5V
VDD
VCC

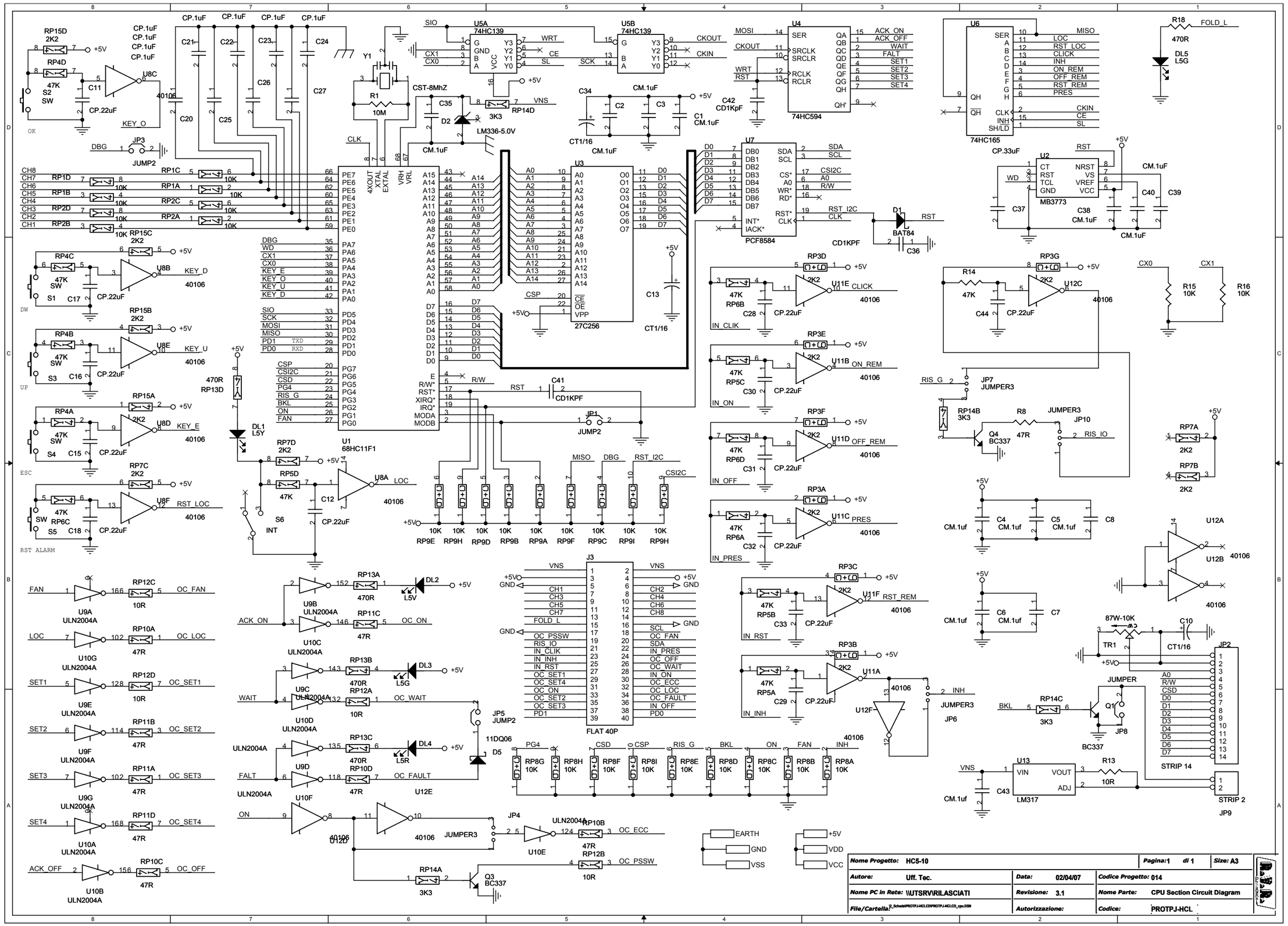
U1 68HC11F1
U2 MB3773
U3 27C256
U4 74HC594
U5A 74HC139
U5B 74HC139
U6 74HC165
U7 PCF8584
U8A U8B U8C U8D U8E U8F
U9A U9B U9C U9D U9E U9F U9G
U10A U10B U10C U10D U10E U10F
U11A U11B U11C U11D U11E U11F
U12A U12B U12C U12D U12E
U13 LM317
RP3A RP3B RP3C RP3D RP3E RP3F RP3G
RP4A RP4B RP4C RP4D
RP5A RP5B RP5C RP5D
RP6A RP6B RP6C RP6D
RP7A RP7B RP7C RP7D
RP8A RP8B RP8C RP8D RP8E RP8F RP8G RP8H RP8I
RP9A RP9B RP9C RP9D RP9E RP9F RP9H RP9H RP9I
RP10A RP10B RP10C RP10D
RP11A RP11B RP11C RP11D
RP12A RP12B RP12C RP12D
RP13A RP13B RP13C RP13D
RP14A RP14B RP14C RP14D
RP15A RP15B RP15C RP15D
JP1 JP2 JP3 JP4 JP5 JP6 JP7 JP8 JP9 JP10
JUMPER JUMPER3
J3 FLAT 40P
STRIP 14 STRIP 2
Y1 CST-8MhZ
D1 BAT84
D2 LM336-5.0V
DL1 L5Y
DL2 L5V
DL3 L5G
DL5 L5G
11DQ06 D5
Q1 BC337
Q3 BC337
Q4 BC337
TR1 87W-10K
SW S1 S2 S3 S4 S5 S6
CP.1uF CP.22uF CM.1uF CP.33uF
CT1/16 CD1KPF CD1KpF
470R 47K 10K 10M 3K3 47R
40106
+5V
Nome Progetto: HC5-10
Pagina: 1 di 1
Size: A3
Autore: Uff. Tec.
Data: 02/04/07
Codice Progetto: 014
Nome PC in Rete: \\UTSRV\RILASCIATI
Revisione: 3.1
Nome Parte: CPU Section Circuit Diagram
File/Cartella: P_Schede\PROTPJ-HCL\DP\PROTPJ-HCLCD_cpu.DSN
Autorizzazione:
Codice: PROTPJ-HCL

Revised: Thursday, January 08, 2009
Revision:

Item	Quantity	Reference	Part
1	13	C1, C25, C31, C33, C34, C51, C53, C54, C55, C60, C61, C62, C63	CM.1uF
2	2	C2, C24	100/25
3	23	C3, C4, C5, C6, C7, C8, C9, C10, C11, C12, C13, C14, C15, C16, C17, C18, C19, C20, C21, C22, C23, C52, C57	CD4K7PF
4	2	C26, C27	CT10/25
5	1	C28	CD4KPF
6	2	C29, C30	CP10KPF
7	8	C32, C42, C43, C44, C45, C46, C47, C48	CP.22uF
8	4	C35, C39, C41, C49	CM100PF
9	4	C36, C37, C38, C40	CT1/16
10	1	C50	CD4K7KPF
11	1	C56	1000/35
12	1	C58	CT1/25
13	1	C59	CP1OKPF
14	10	DZ1, DZ2, D14, D15, D16, D17, D18, D19, D20, D21	5V1/0.5
15	1	DZ3	7V5-0.5
16	5	D1, D2, D4, D12, D22	1N4004
17	1	D3	WL02
18	4	D5, D6, D7, D8	BAT83
19	2	D9, R12	XX
20	1	D10	20V-0.5
21	1	D11	5V1-0.5
22	15	F1, F2, F3, F4, F5, F6, F7, F8, F17, F18, F19, F20, F21, F22, F23	DSS306
23	1	F16	BL02
24	1	JP1	MASCON20
25	1	JP2	JUMPER3
26	1	J1	CON26A
27	1	J2	CON20AP
28	1	J3	FLAT 40P
29	1	K1	ZFH-12V
30	4	PD1, PD2, PD3, PD4	LUNENO
31	2	RP1, RP2	4K7
32	12	R1, R3, R4, R25, R33, R37, R41, R45, R49, R53, R57, R60	33K
33	1	R2	10K-SMD
34	3	R6, R8, R22	10K
35	1	R9	39K
36	7	R10, R11, R13, R14, R15, R16, R46	5K6
37	10	R18, R31, R35, R39, R42, R43, R47, R51, R54, R55	470R
38	2	R19, R20	R
39	1	R23	1M
40	2	R26, R27	100R
41	2	R28, R29	22R
42	1	R30	3K3
43	2	R34, R50	100K
44	1	R38	330R
45	1	R58	2K2
46	1	R59	RXE040
47	1	R61	237R
48	1	R62	1K1
49	1	TP1	TP
50	10	TR1, TR2, TR3, TR4, TR5, TR6, TR7, TR8, TR9, TR10	87X-20K
51	1	U1	LM7805
52	1	U2	TC7660
53	3	U3, U5, U6	TS914
54	1	U4	ICL232
55	1	U7	LM317L

Revised: Thursday, January 08, 2009
Revision:

Item	Quantity	Reference	Part
1	13	C1, C2, C3, C4, C5, C6, C7, C8, C35, C38, C39, C40, C43	CM.1uf
2	3	C10, C13, C34	CT1/16
3	13	C11, C12, C15, C16, C17, C18, C28, C29, C30, C31, C32, C33, C44	CP.22uF
4	8	C20, C21, C22, C23, C24, C25, C26, C27	CP.1uF
5	3	C36, C41, C42	CD1KpF
6	1	C37	CP.33uF
7	1	DL1	L5Y
8	1	DL2	L5V
9	2	DL3, DL5	L5G
10	1	DL4	L5R
11	1	D1	BAT84
12	1	D2	LM336-5.0V
13	1	D5	11DQ06
14	3	JP1, JP3, JP5	JUMP2
15	1	JP2	STRIP 14
16	4	JP4, JP6, JP7, JP10	JUMPER3
17	1	JP8	JUMPER
18	1	JP9	STRIP 2
19	1	J3	FLAT 40P
20	3	Q1, Q3, Q4	BC337
21	6	RP1, RP2, RP8, RP9, R15, R16	10K
22	3	RP3, RP7, RP15	2K2
23	4	RP4, RP5, RP6, R14	47K
24	3	R8, RP10, RP11	47R
25	2	RP12, R13	10R
26	2	RP13, R18	470R
27	1	RP14	3K3
28	1	R1	10M
29	5	S1, S2, S3, S4, S5	SW
30	1	S6	INT
31	1	TR1	87W-10K
32	1	U1	68HC11F1
33	1	U2	MB3773
34	1	U3	27C256
35	1	U4	74HC594
36	1	U5	74HC139
37	1	U6	74HC165
38	1	U7	PCF8584
39	3	U8, U11, U12	40106
40	2	U9, U10	ULN2004A
41	1	U13	LM317
42	1	Y1	CST-8MhZ

8.5.1 Prot-F foldback calibration

The procedure applies to all equipment that use the PROTF card.

Calibration TR10:
connect the multimeter to pin 3 of U3 (LM324) and measuring a voltage of 3,9V +/- 0,2V.

Calibration TR9:
connect the multimeter on test point TP1, and measure a voltage of 0V with tolerance -0V +0,2V

CAUTION:
Follow exactly the sequence of calibration trimmer, TR10 first and then TR9.

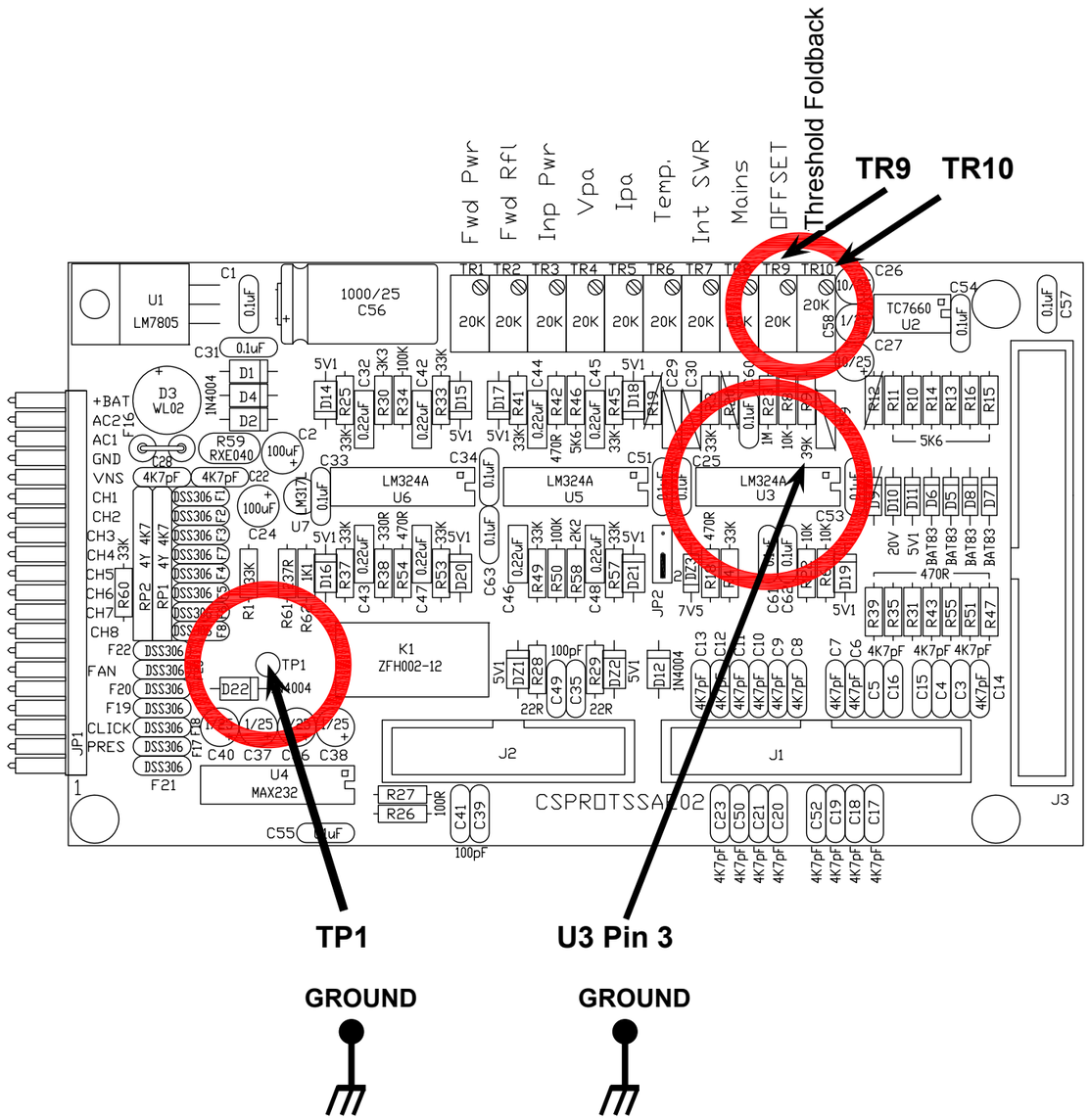

8.6 Addon board (SL154IN2001)

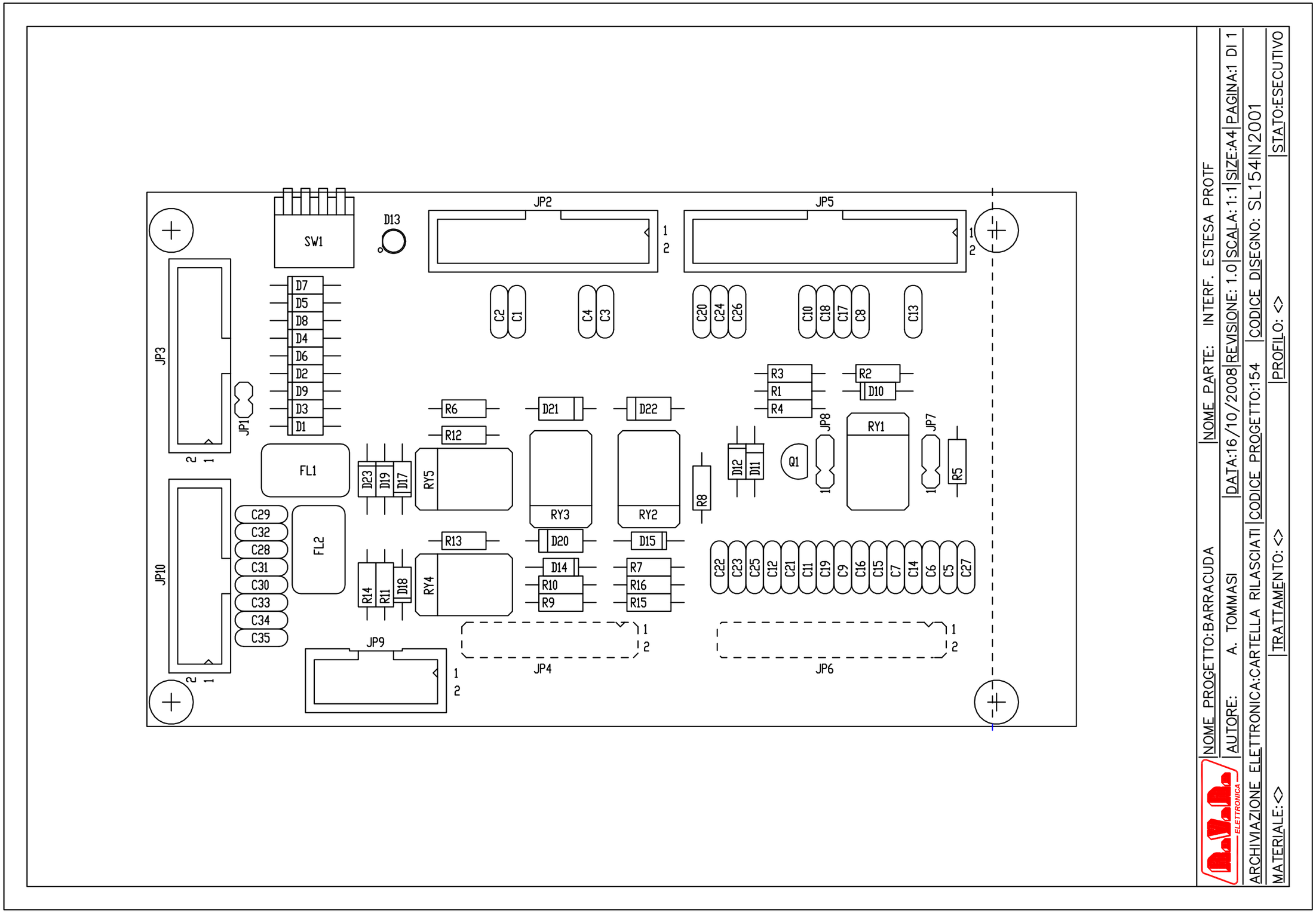

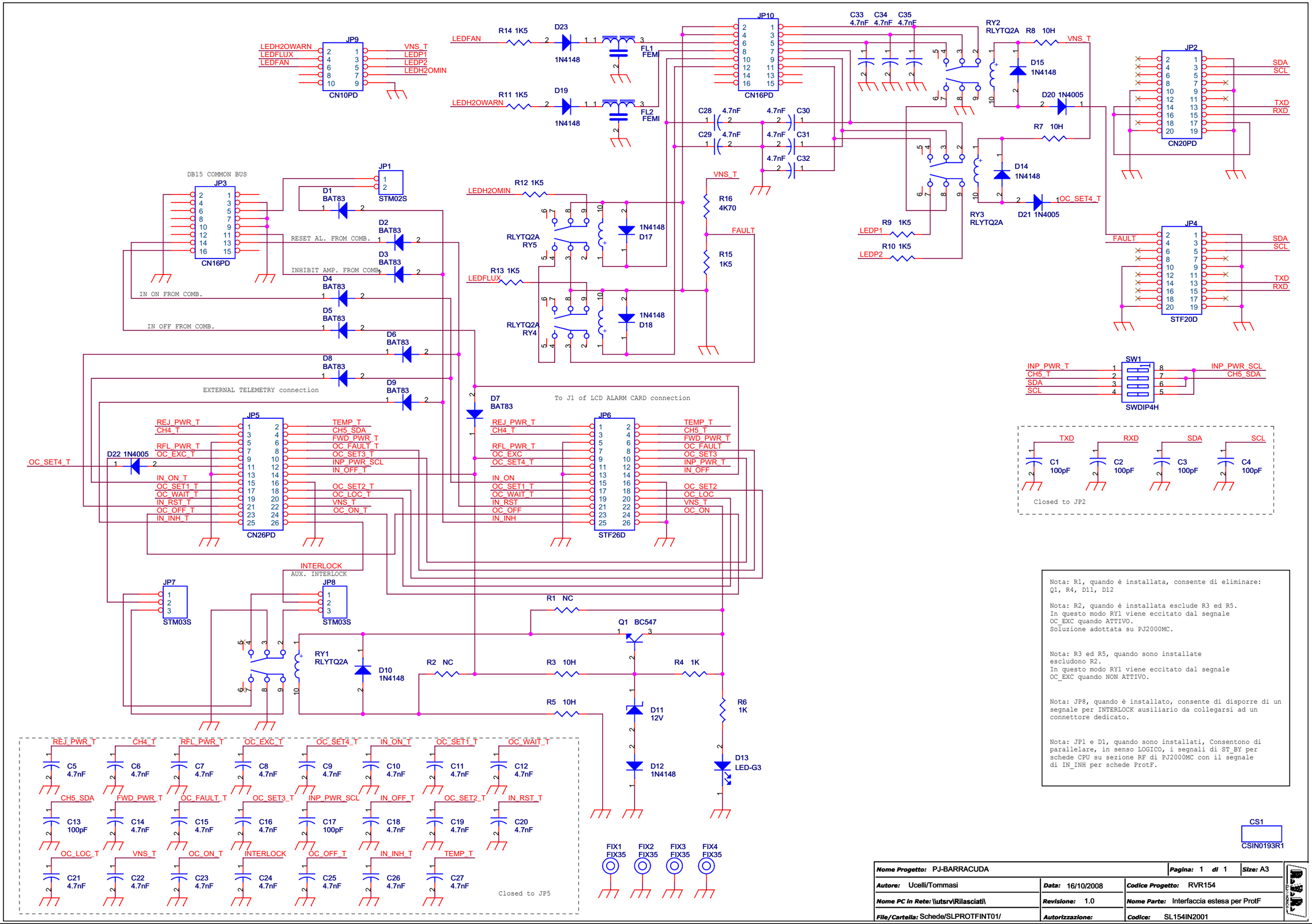
JP9
CN10PD
LEDH2OWARN
LEDFLUX
LEDFAN
VNS_T
LEDP1
LEDP2
LEDH2OMIN
R14 1K5
R11 1K5
D23
D19
1N4148
FL1 FEMI
FL2 FEMI
JP10
CN16PD
C33 C34 C35 4.7nF 4.7nF 4.7nF
C28 C29 C30 C31 C32 4.7nF
RY2 RLYTQ2A
R8 10H
D15 1N4148
D20 1N4005
R7 10H
D14 1N4148
D21 1N4005
RY3 RLYTQ2A
OC_SET4_T
JP2
CN20PD
SDA
SCL
TXD
RXD
JP4
STF20D
FAULT
R16 4K70
R15 1K5
R9 1K5
R10 1K5
R12 1K5
R13 1K5
RLYTQ2A RY5
RLYTQ2A RY4
D17
D18
DB15 COMMON BUS
JP3
CN16PD
JP1
STM02S
D1 BAT83
RESET AL. FROM COMB.
INHIBIT AMP. FROM COMB.
IN ON FROM COMB.
IN OFF FROM COMB.
D2 BAT83
D3 BAT83
D4 BAT83
D5 BAT83
D6 BAT83
D8 BAT83
D9 BAT83
EXTERNAL TELEMETRY connection
To J1 of LCD ALARM CARD connection
D7 BAT83
JP5
CN26PD
JP6
STF26D
REJ_PWR_T
CH4_T
RFL_PWR_T
OC_EXC_T
IN_ON_T
OC_SET1_T
OC_WAIT_T
IN_RST_T
OC_OFF_T
IN_INH_T
TEMP_T
CH5_SDA
FWD_PWR_T
OC_FAULT_T
OC_SET3_T
INP_PWR_SCL
IN_OFF_T
OC_SET2_T
OC_LOC_T
VNS_T
OC_ON_T
D22 1N4005
INTERLOCK
AUX. INTERLOCK
JP7
STM03S
JP8
STM03S
RY1 RLYTQ2A
D10 1N4148
R1 NC
R2 NC
R3 10H
R4 1K
R5 10H
Q1 BC547
D11 12V
D12 1N4148
R6 1K
D13 LED-G3
C5 C6 C7 C8 C9 C10 C11 C12 4.7nF
C13 C14 C15 C16 C17 C18 C19 C20
C21 C22 C23 C24 C25 C26 C27
100pF
Closed to JP5
FIX1 FIX35
FIX2 FIX35
FIX3 FIX35
FIX4 FIX35
SW1
SWDIP4H
INP_PWR_T
INP_PWR_SCL
CH5_T
CH5_SDA
C1 C2 C3 C4 100pF
Closed to JP2
Nota: R1, quando è installata, consente di eliminare:
Q1, R4, D11, D12
Nota: R2, quando è installata esclude R3 ed R5.
In questo modo RY1 viene eccitato dal segnale
OC_EXC quando ATTIVO.
Soluzione adottata su PJ2000MC.
Nota: R3 ed R5, quando sono installate
escludono R2.
In questo modo RY1 viene eccitato dal segnale
OC_EXC quando NON ATTIVO.
Nota: JP8, quando è installato, consente di disporre di un
segnale per INTERLOCK ausiliario da collegarsi ad un
connettore dedicato.
Nota: JP1 e D1, quando sono installati, Consentono di
parallelare, in senso LOGICO, i segnali di ST_BY per
schede CPU su sezione RF di PJ2000MC con il segnale
di IN_INH per schede ProtF.
CS1
CSIN0193R1
Nome Progetto: PJ-BARRACUDA
Pagina: 1 di 1
Size: A3
Autore: Ucelli/Tommasi
Data: 16/10/2008
Codice Progetto: RVR154
Nome PC in Rete: \\utsrv\Rilasciati\
Revisione: 1.0
Nome Parte: Interfaccia estesa per ProtF
File/Cartella: Schede/SLPROTFINT01/
Autorizzazione:
Codice: SL154IN2001

Interfaccia estesa per ProtF Revised: 16/10/2008
SL154IN2001 Revision: 1.0
PJ-BARRACUDA
RVR154
Ucelli/Tommasi

Item	Quantity	Reference	Part	Description	Code
1	1	CS1	CSIN0193R1	Circuito stampato	CSIN0193R1
2	6	C1,C2,C3,C4,C13,C17	100pF	Cond. ceramico p 5mm	CKM101KC101C
3	29	C5,C6,C7,C8,C9,C10,C11, C12,C14,C15,C16,C18,C19, C20,C21,C22,C23,C24,C25, C26,C27,C28,C29,C30,C31, C32,C33,C34,C35	4.7nF	Cond. ceramico p 5mm	CKM472KC600P
4	9	D1,D2,D3,D4,D5,D6,D7,D8, D9	BAT83	Diodi Hot carrier DO35	DHCBAT83
5	8	D10,D12,D14,D15,D17,D18, D19,D23	1N4148	Diodo in vetro DO35	DIS1N4148
6	1	D11	12V	1/4W Zener Diode	DIZ12V1/2W
7	1	D13	LED-G3	LEDVERDE dia. 3mm a battuta	LEDV03
8	3	D20,D21,D22	1N4005	Diodo plastico DO41	DIS1N4007
9	4	FIX1,FIX2,FIX3,FIX4	FIX35	Foro fissaggio 3.5mm	
10	2	FL1,FL2	FEMI	Filtro EMI Murata DSS310	FEA55Y223500
11	1	JP1	STM02S	Strip maschio 2 pin	CNTSTM40SDA
12	1	JP2	CN20PD	Connettore 20 poli Flat cs	CNTMCS20A
13	2	JP3,JP10	CN16PD	Conn.M.C.S.Dritto 16P alette	CNTMCS16A
14	1	JP4	STF20D	Strip femmina 10+10 pin	CNTSTF10DDB
15	1	JP5	CN26PD	Connettore 26 poli Flat cs	CNTMCS26A
16	1	JP6	STF26D	Strip femmina 13+13 pin	CNTSTF13DDB
17	2	JP7,JP8	STM03S	Strip maschio 3 pin	CNTSTM40SDA
18	1	JP9	CN10PD	Connettore 10 poli Flat cs	CNTMCS10A
19	1	Q1	BC547	Trans. NPN TO92	TRNBC547
20	5	RY1,RY2,RY3,RY4,RY5	RLYTQ2A	Rele' TQ2 12V	RLD2V12V05AM
21	2	R1,R2	NC	Res. 1/4W	
22	4	R3,R5,R7,R8	10H	Res. 1/4W	RSM1/4F0010H
23	2	R4,R6	1K	Res. 1/4W	RSM1/4F0001K
24	7	R9,R10,R11,R12,R13,R14, R15	1K5	Res. 1/4W	RSM1/4F001K5
25	1	R16	4K70	Res. 1/4W	RSM1/4F004K7
26	1	SW1	SWDIP4H	Dip switch 4 vie vert.	DSW4VV

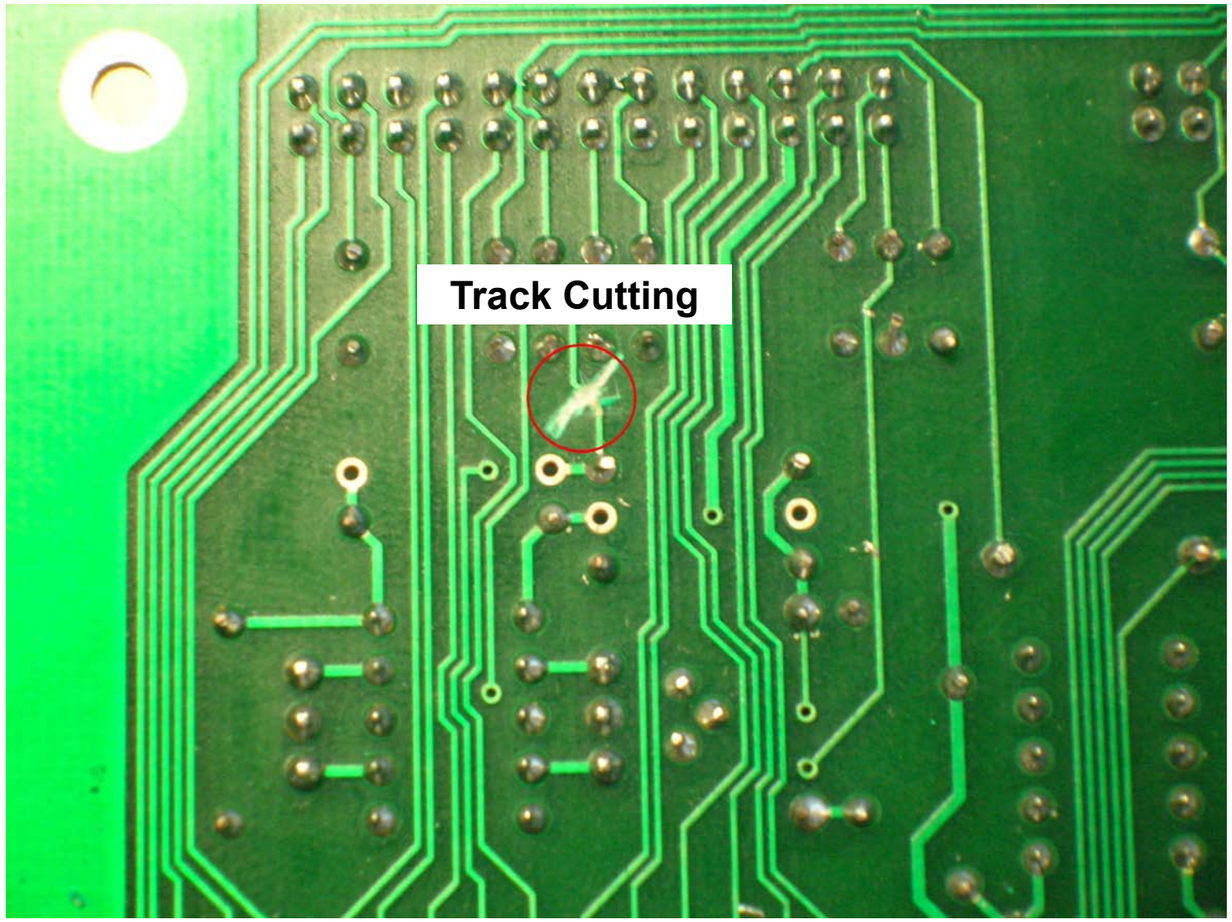

8.7 Low-Power Driver board (SLDR0066R02V01C)

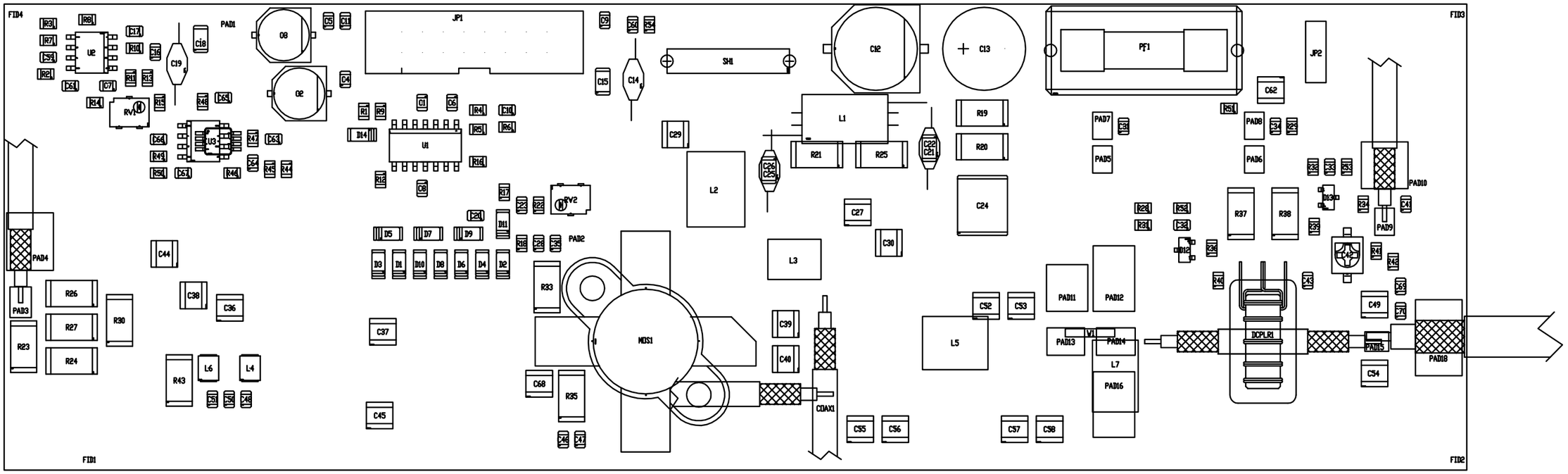

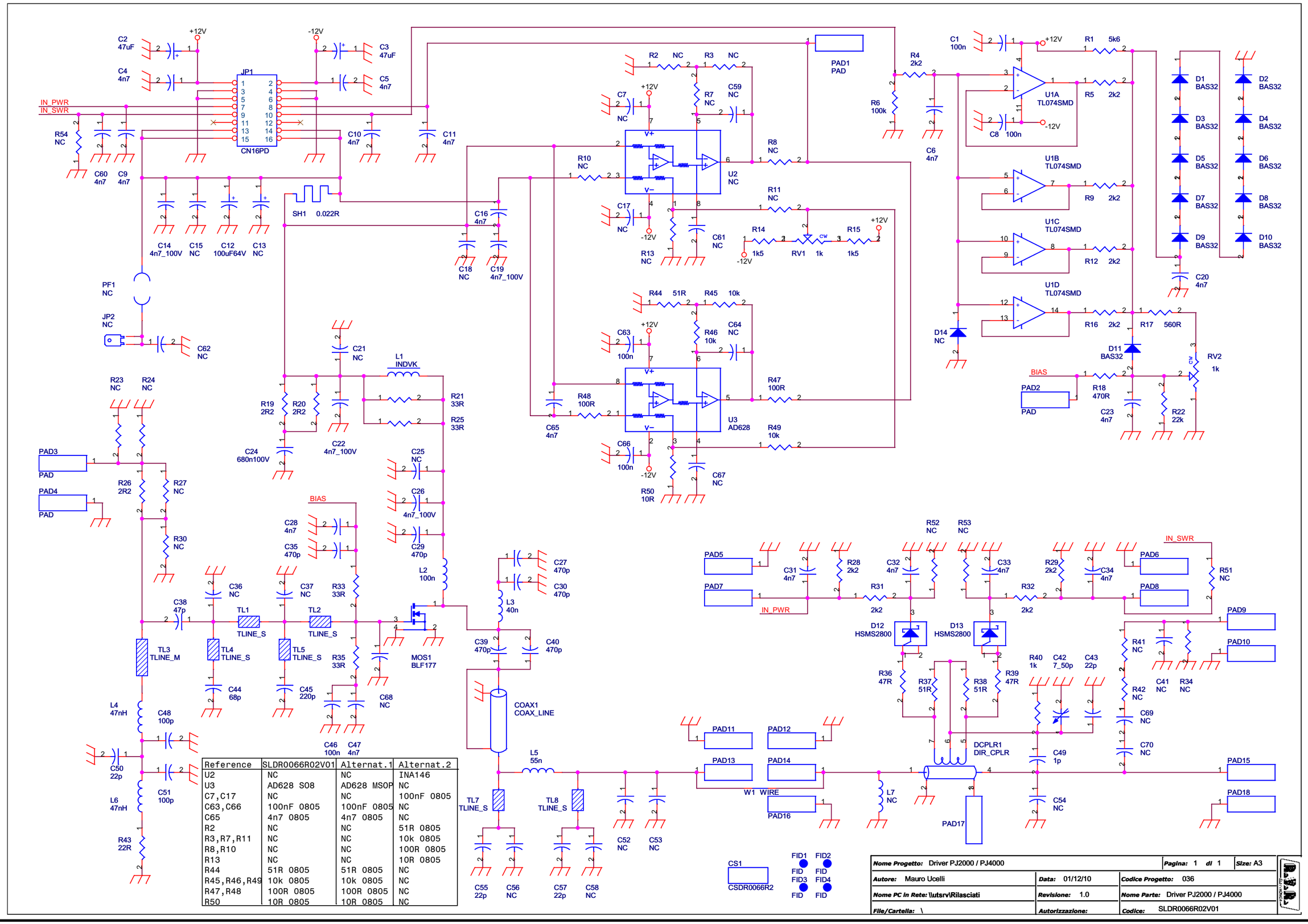

Reference	SLDR0066R02V01	Alternat.1	Alternat.2
U2	NC	NC	INA146
U3	AD628 SO8	AD628 MSOP	NC
C7,C17	NC	NC	100nF 0805
C63,C66	100nF 0805	100nF 0805	NC
C65	4n7 0805	4n7 0805	NC
R2	NC	NC	51R 0805
R3,R7,R11	NC	NC	10k 0805
R8,R10	NC	NC	100R 0805
R13	NC	NC	10R 0805
R44	51R 0805	51R 0805	NC
R45,R46,R49	10k 0805	10k 0805	NC
R47,R48	100R 0805	100R 0805	NC
R50	10R 0805	10R 0805	NC

Nome Progetto: Driver PJ2000 / PJ4000		**Pagina:** 1 **di** 1	**Size:** A3
Autore: Mauro Ucelli	**Data:** 01/12/10	**Codice Progetto:** 036	
Nome PC in Rete: \\utsrv\Rilasciati	**Revisione:** 1.0	**Nome Parte:** Driver PJ2000 / PJ4000	
File/Cartella: \	**Autorizzazione:**	**Codice:** SLDR0066R02V01	

Item	Quan-tity	Reference	Part	Description	Code1
1	1	COAX1	COAX_LINE	Coax 25H taglio 225mm 4 spire su totoide D.24	
2	1	CS1	CSDR0066R2	Circuito stampato	CSDR0066R2
3	5	C1,C8,C46,C63,C66	100n	Cond. SMD 0805	CCC085104KXC
4	2	C2,C3	47uF	Cond. Elett. SMD d. 6.3mm	CES476C160A
5	17	C4,C5,C6,C9,C10,C11,C16,	4n7	Cond. SMD 0805	CCC085472KXC
		C20,C23,C28,C31,C32,C33,			
		C34,C47,C60,C65			
6	2	C7,C17	NC	Cond. SMD 0805	
7	1	C12	100uF64V	Cond. Elett. SMD d. 10mm	CES107DE630
8	1	C13	NC	Cond. Elettr. Dia 10 P5.08	
9	4	C14,C19,C22,C26	4n7_100V	Cond. ceramico multistrato p 5mm	CMS472MC101
10	4	C15,C18,C21,C25	NC	Cond. SMD 1206	
11	1	C24	680n100V	Cond. SMD 2824	CPE684K101O
12	5	C27,C29,C30,C39,C40	470p	Cond. SMD 1212 HQ	CHQ471JA201
13	1	C35	470p	Cond. SMD 0805	CCC085471JCC
14	9	C36,C37,C52,C53,C54,C56,	NC	Cond. SMD 1212 HQ	
		C58,C62,C68			
15	1	C38	47p	Cond. SMD 1212 HQ	CHQ470JA501
16	1	C41	NC	Cond. SMD 0805 COG	
17	1	C42	7_50p	Comp. var. Murata TZB4A	CVF500D4,5SM
18	1	C43	22p	Cond. SMD 0805	CCC085220JCC
19	1	C44	68p	Cond. SMD 1212 HQ	CHQ680JA501
20	1	C45	220p	Cond. SMD 1212 HQ	CHQ221JA201
21	2	C48,C51	100p	Cond. SMD 0805 COG	CCC085101JCC
22	1	C49	1p	Cond. SMD 1212 HQ	CHQ010CA501
23	1	C50	22p	Cond. SMD 0805 COG	CCC085220JCC
24	2	C55,C57	22p	Cond. SMD 1212 HQ	CHQ220JA501
25	6	C59,C61,C64,C67,C69,C70	NC		
26	1	DCPLR1	DIR_CPLR	Acc. dir. su toroide	KITFTR1010SP
27	11	D1,D2,D3,D4,D5,D6,D7,D8,	BAS32	MINIMELF SMD Diode	DISBAS32MINI
		D9,D10,D11			
28	2	D12,D13	HSMS2800	Diodo Shottky SOT23	DISHSMS2800
29	1	D14	NC	MINIMELF SMD Diode	
30	4	FID1,FID2,FID3,FID4	FID	Fiducial CS	
31	1	JP1	CN16PD	Connettore 16 poli Flat cs	CNTMCS16A
32	1	JP2	NC	Faston da CS p. 5.08	
33	1	L1	INDVK	Induttanza cilindrica VK200	IMPVK00A
34	1	L2	100n	5 spire filo Rame arg. D. 1mm avvolte su 6mm lungh. 10mm	BOB01020006A
35	1	L3	40n	2 spire filo Rame arg. D. 1mm avvolte su 6mm lungh. 4mm	BOB01020019A
36	2	L4,L6	47nH	Induttanza SMD 3225 (1210)	IMP47NS120
37	1	L5	55n	4 spire filo Rame arg D. 1mm avvolte su 6mm lungh. 14mm	BOB01020005A
38	1	L7	NC	Induttanza cilindrica	
39	1	MOS1	BLF177	Power mosfet RF	TRNBLF177
40	18	PAD1,PAD2,PAD3,PAD4,PAD5,	PAD		
		PAD6,PAD7,PAD8,PAD9,			
		PAD10,PAD11,PAD12,PAD13,			
		PAD14,PAD15,PAD16,PAD17,			
		PAD18			
41	1	PF1	NC	Portafusibile 5x20 10A	
42	2	RV1,RV2	1k	Trimm. multi SMD PVG5 Murata	RVTMLK0001VS
43	1	R1	5k6	Res. SMD 0805	RCH085F005K6
44	14	R2,R3,R7,R8,R10,R11,R13,	NC	Res. SMD 0805	RCH085J
		R34,R41,R42,R51,R52,R53,			
		R54			
45	9	R4,R5,R9,R12,R16,R28,R29,	2k2	Res. SMD 0805	RCH085F002K2
		R31,R32			
46	1	R6	100k	Res. SMD 0805	RCH085F0100K
47	2	R14,R15	1k5	Res. SMD 0805	RCH085F001K5
48	1	R17	560R	Res. SMD 0805	RCH085F0560H
49	1	R18	470R	Res. SMD 0805	RCH085F0470H
50	3	R19,R20,R26	2R2	Res. SMD 2512 1%	RCH252J002H2
51	4	R21,R25,R33,R35	33R	Res. SMD 2512 1%	RCH252J0033H
52	1	R22	22k	Res. SMD 0805	RCH085F0022K
53	4	R23,R24,R27,R30	NC	Res. SMD 2512 1%	
54	2	R36,R39	47R	Res. SMD 0805	RCH085F0047H
55	2	R37,R38	51R	Res. SMD 2512 1%	RCH252J0051H
56	1	R40	1k	Res. SMD 0805	RCH085F0001K
57	1	R43	22R	Res. SMD 2512 1%	RCH252F0022H
58	1	R44	51R	Res. SMD 0805	RCH085F0051H
59	3	R45,R46,R49	10k	Res. SMD 0805	RCH085F0010K
60	2	R47,R48	100R	Res. SMD 0805	RCH085F0100H
61	1	R50	10R	Res. SMD 0805	RCH085F0010H
62	1	SH1	0.022R	Shunt passo 15.2mm fori 2mm	RSH10A0H022
63	6	TL1,TL2,TL4,TL5,TL7,TL8	TLINE_S	Linea strip CS	
64	1	TL3	TLINE_M	Linea strip CS	
65	1	U1	TL074SMD	Quad Op. SMD SO14	CILTL074SMD
66	1	U2	NC	HV Diff. Amp. Adj	
67	1	U3	AD628	HV Diff. Amp. Adj Case SO8	CILAD628SO8
68	1	W1	WIRE	Wire Diam. 1mm lenght 10mm	

8.8 PFC (KPFCPSL4280.LC)

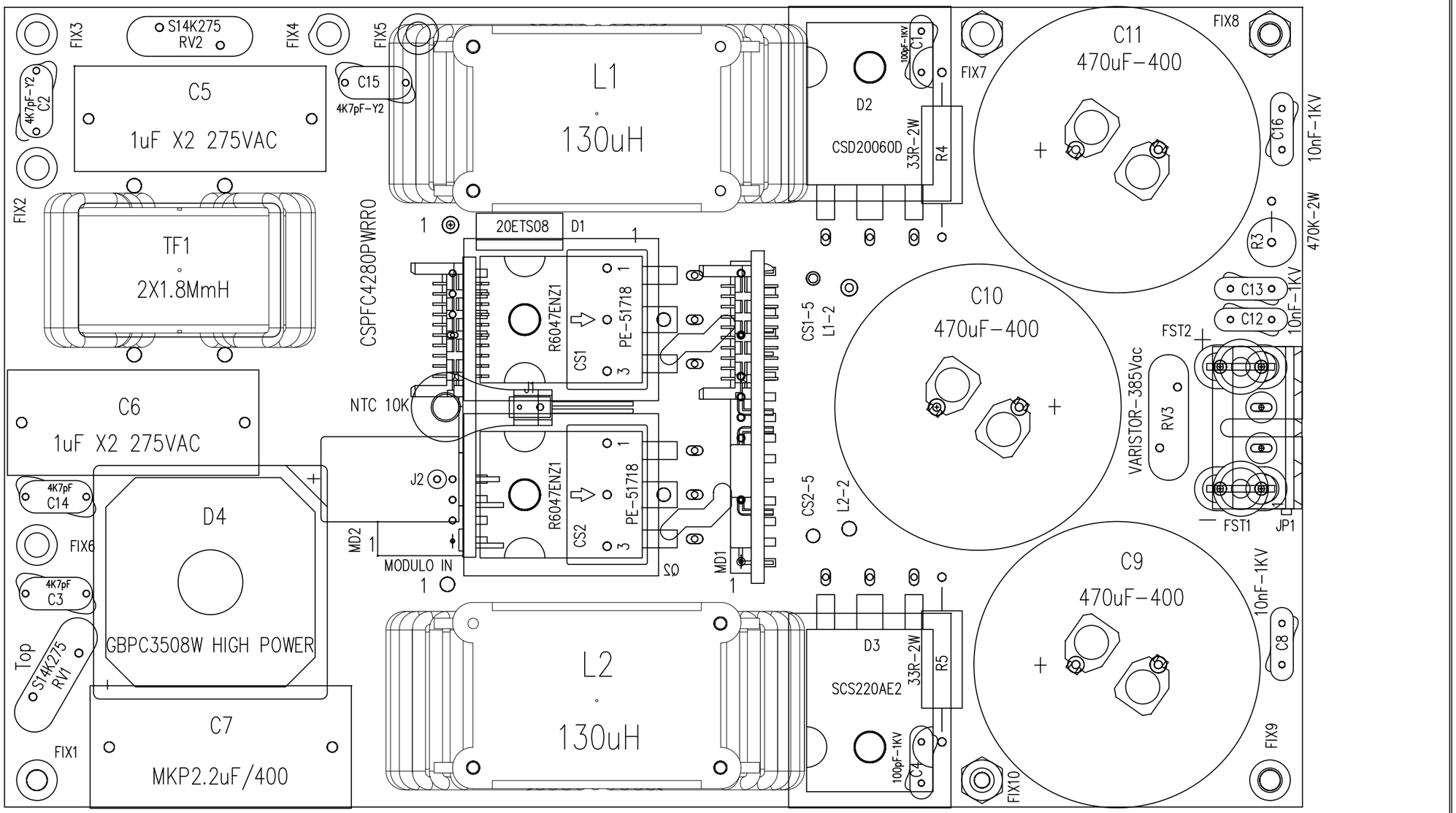

ARCHIVIO: X:\WORKDWG\		
TITLE PIANO DI MONTAGGIO PWR PFC4280 R1		
DOCUMENT NUMBER PFC4280PWR_R1_MNT.DWG	REV 1	
DATE: 4 MARZO 2014		

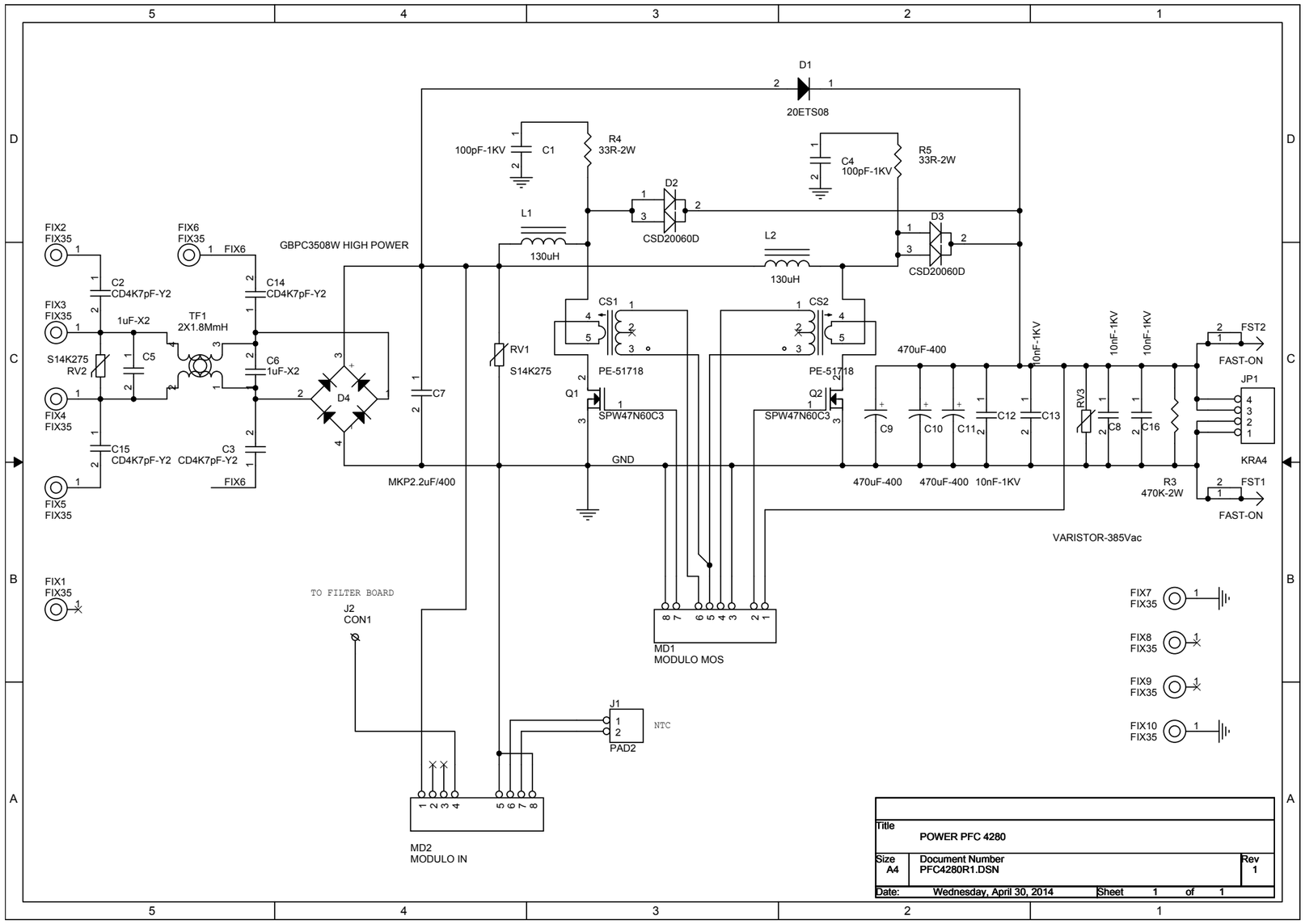

POWER PFC 4280 Revised: Wednesday, April 30, 2014
PFC4280R1.DSN Revision: 1

Item	Qty	Reference	Part
1	2	CS1,CS2	PE-51718
2	2	C1,C4	100pF-1KV
3	4	C2,C3,C14,C15	CD4K7pF-Y2
4	2	C5,C6	1uF-X2
5	1	C7	MKP2.2uF/400
6	4	C8,C12,C13,C16	10nF-1KV
7	3	C9,C10,C11	470uF-400
8	1	D1	20ETS08
9	2	D2,D3	CSD20060D
10	1	D4	GBPC3508W HIGH POWER
11	10	FIX1,FIX2,FIX3,FIX4,FIX5 FIX6,FIX7,FIX8,FIX9, FIX10	FIX35
12	2	FST1,FST2	FAST-ON
13	1	JP1	KRA4
14	1	J1	PAD2
15	1	J2	CON1
16	2	L1,L2	130uH
17	1	MD1	MODULO MOS
18	1	MD2	MODULO IN
19	2	Q1,Q2	SPW47N60C3
20	2	RV1,RV2	S14K275
21	1	RV3	VARISTOR-385Vac
22	1	R3	470K-2W
23	2	R4,R5	33R-2W
24	1	TF1	2X1.8MmH

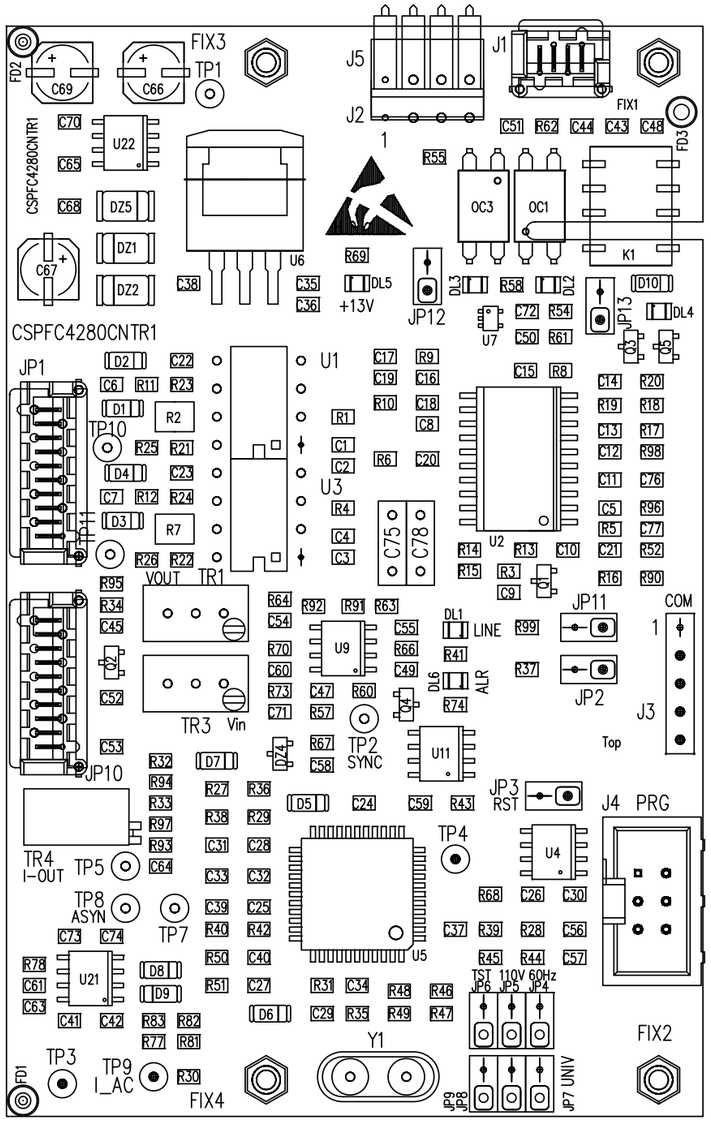

MOS

FLT

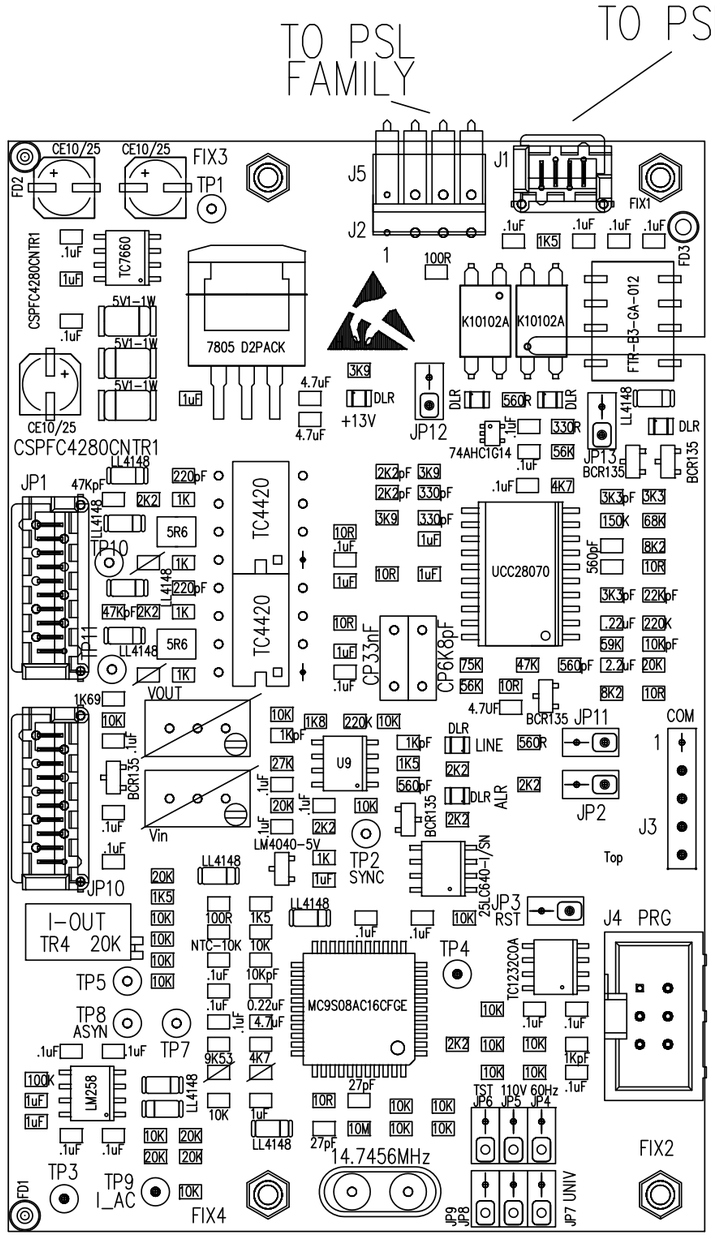

ARCHIVIO: X:\WORKDWG\	
TITLE PIANO DI MONTAGGIO CNT PFC4280	
DOCUMENT NUMBER PFC4280CNT_R1_MNT.DWG	REV 1
DATE: 28 APRILE 2014	

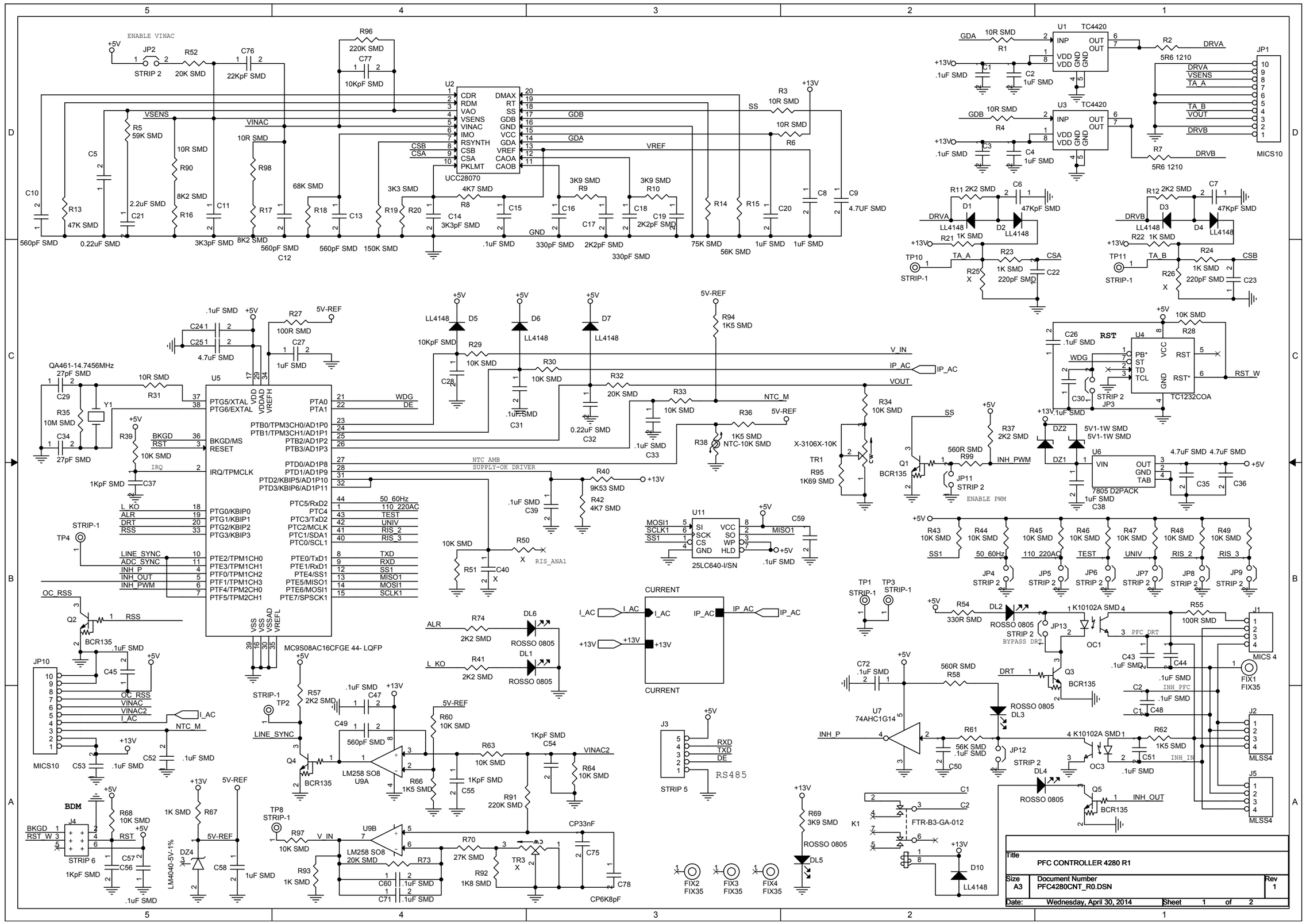
ENABLE VINAC
JP2
STRIP 2
R52 20K SMD
C76 22KpF SMD
R96 220K SMD
C77 10KpF SMD
U2
UCC28070
CDR RDM VAO VSENS VINAC IMO RSYNTH CSB CSA PKLMT
DMAX RT SS GDB GND VCC GDA VREF CAOA CAOB
VSENS VINAC CSB CSA GDB GDA VREF SS
R5 59K SMD
R90 10R SMD
R16 8K2 SMD
R98 10R SMD
R17 68K SMD
R18 560pF SMD
R19 3K3 SMD
R20 4K7 SMD
R8
R9 3K9 SMD
R10 3K9 SMD
R14 75K SMD
R15 56K SMD
R3 10R SMD
R6 10R SMD
C5 2.2uF SMD
C10 560pF SMD
C11 3K3pF SMD
C12 8K2 SMD
C13 560pF SMD
C14 3K3pF SMD
C15 .1uF SMD
C16 330pF SMD
C17 2K2pF SMD
C18 330pF SMD
C19 2K2pF SMD
C20 1uF SMD
C8 1uF SMD
C9 4.7UF SMD
R13 47K SMD
C21 0.22uF SMD
+13V
GND
U1 TC4420
U3 TC4420
GDA 10R SMD R1
GDB 10R SMD R4
INP OUT VDD GND
C1 .1uF SMD
C2 1uF SMD
C3 .1uF SMD
C4 1uF SMD
R2 DRVA 5R6 1210
R7 DRVB 5R6 1210
JP1 MICS10
DRVA VSENS TA_A TA_B VOUT DRVB
R11 2K2 SMD
R12 2K2 SMD
D1 D2 D3 D4 LL4148
C6 47KpF SMD
C7 47KpF SMD
R21 1K SMD
R22 1K SMD
TP10 STRIP-1
TP11 STRIP-1
TA_A TA_B
R23 1K SMD
R24 1K SMD
R25 X
R26 X
C22 220pF SMD
C23 220pF SMD
CSA CSB
R27 100R SMD
5V-REF
C24 4.7uF SMD
C25 .1uF SMD
C27 1uF SMD
QA461-14.7456MHz
27pF SMD
C29 C34
Y1
R35 10M SMD
R31 10R SMD
U5
PTG5/XTAL PTG6/EXTAL
VDD VDDAD VREFH
PTA0 PTA1
PTB0/TPM3CH0/AD1P0 PTB1/TPM3CH1/AD1P1 PTB2/AD1P2 PTB3/AD1P3
PTD0/AD1P8 PTD1/AD1P9 PTD2/KBIP5/AD1P10 PTD3/KBIP6/AD1P11
PTC5/RxD2 PTC4 PTC3/TxD2 PTC2/MCLK PTC1/SDA1 PTC0/SCL1
PTE2/TPM1CH0 PTE3/TPM1CH1 PTF0/TPM1CH2 PTF1/TPM1CH3 PTF4/TPM2CH0 PTF5/TPM2CH1
PTE0/TxD1 PTE1/RxD1 PTE4/SS1 PTE5/MISO1 PTE6/MOSI1 PTE7/SPSCK1
PTG0/KBIP0 PTG1/KBIP1 PTG2/KBIP2 PTG3/KBIP3
BKGD/MS RESET IRQ/TPMCLK L_KO ALR DRT RSS
WDG DE NTC_AMB SUPPLY-OK DRIVER 50_60Hz 110_220AC TEST UNIV RIS_2 RIS_3 TXD RXD SS1 MISO1 MOSI1 SCLK1
VSS VSS VSSAD VREFL
MC9S08AC16CFGE 44- LQFP
R39 10K SMD
C37 1KpF SMD
R40 9K53 SMD
R42 4K7 SMD
C39 .1uF SMD
R50 X
R51 10K SMD
C40 X
RIS_ANA1
U11
25LC640-I/SN
SI SCK CS GND VCC SO WP HLD
MOSI1 SCLK1 SS1 MISO1
C59 .1uF SMD
STRIP-1 TP4
LINE_SYNC ADC_SYNC INH_P INH_OUT INH_PWM
OC_RSS
Q2 BCR135
R94 1K5 SMD
V_IN IP_AC VOUT
D5 D6 D7 LL4148
R29 10K SMD
R30 10K SMD
R32 20K SMD
R33 10K SMD
R36 1K5 SMD NTC-10K SMD
R38 1K5 SMD
C28 10KpF SMD
C31 .1uF SMD
C32 0.22uF SMD
C33 .1uF SMD
NTC_M
X-3106X-10K
TR1 R95 1K69 SMD
R34 10K SMD
SS
Q1 BCR135
R99 560R SMD
R37 2K2 SMD
INH_PWM
JP11 STRIP 2
ENABLE PWM
RST
U4 TC1232COA
PB* ST TD TCL VCC RST* GND RST
R28 10K SMD
C26 .1uF SMD
WDG
C30
STRIP 2 JP3
RST_W
DZ1 DZ2 5V1-1W SMD
U6 7805 D2PACK
VIN OUT GND TAB
C38 1uF SMD
C35 4.7uF SMD
C36 4.7uF SMD
R43 10K SMD
R44 10K SMD
R45 10K SMD
R46 10K SMD
R47 10K SMD
R48 10K SMD
R49 10K SMD
JP4 JP5 JP6 JP7 JP8 JP9 STRIP 2
TP1 TP3 STRIP-1
R54 330R SMD
DL2 ROSSO 0805
JP13 STRIP 2 BYPASS DRT
K10102A SMD
R55 100R SMD
J1 MICS 4
FIX1 FIX35
PFC_DRT
OC1
C43 .1uF SMD
C44 .1uF SMD
INH_PFC
C2 C1 C48
J2 MLSS4
R62 1K5 SMD
INH_IN
OC3
C51 .1uF SMD
J5 MLSS4
DL4 ROSSO 0805
Q5 BCR135
INH_OUT
C72 .1uF SMD
R58 560R SMD
DRT
Q3 BCR135
DL3 ROSSO 0805
JP12 STRIP 2
U7 74AHC1G14
INH_P
R61 56K SMD
C50 .1uF SMD
JP10
OC_RSS VINAC VINAC2 I_AC NTC_M
MICS10
C53 .1uF SMD
C52 .1uF SMD
I_AC
CURRENT
R74 2K2 SMD
DL6 ROSSO 0805
ALR
R41 2K2 SMD
DL1 ROSSO 0805
L_KO
STRIP-1 TP2
LINE_SYNC
R57 2K2 SMD
C47 .1uF SMD
C49 560pF SMD
Q4 BCR135
U9A LM258 SO8
R66 1K5 SMD
R60 10K SMD
R63 10K SMD
C55 1KpF SMD
C54 1KpF SMD
R64 10K SMD
VINAC2
R91 220K SMD
J3 STRIP 5
RS485
RXD TXD DE
R69 3K9 SMD
ROSSO 0805
DL5
K1 FTR-B3-GA-012
C1 C2
D10 LL4148
BDM
J4 STRIP 6
BKGD RST_W RST
R68 10K SMD
C57 1KpF SMD
C56 .1uF SMD
1K SMD R67
DZ4 LM4040-5V-1%
C58 1uF SMD
TP8 STRIP-1
R97 10K SMD
U9B LM258 SO8
20K SMD R73
C60 .1uF SMD
C71 .1uF SMD
R93 1K SMD
R70 27K SMD
R92 1K8 SMD
TR3 X
CP33nF
C75
C78 CP6K8pF
FIX2 FIX35
FIX3 FIX35
FIX4 FIX35
Title
PFC CONTROLLER 4280 R1
Size A3
Document Number PFC4280CNT_R0.DSN
Rev 1
Date: Wednesday, April 30, 2014
Sheet 1 of 2

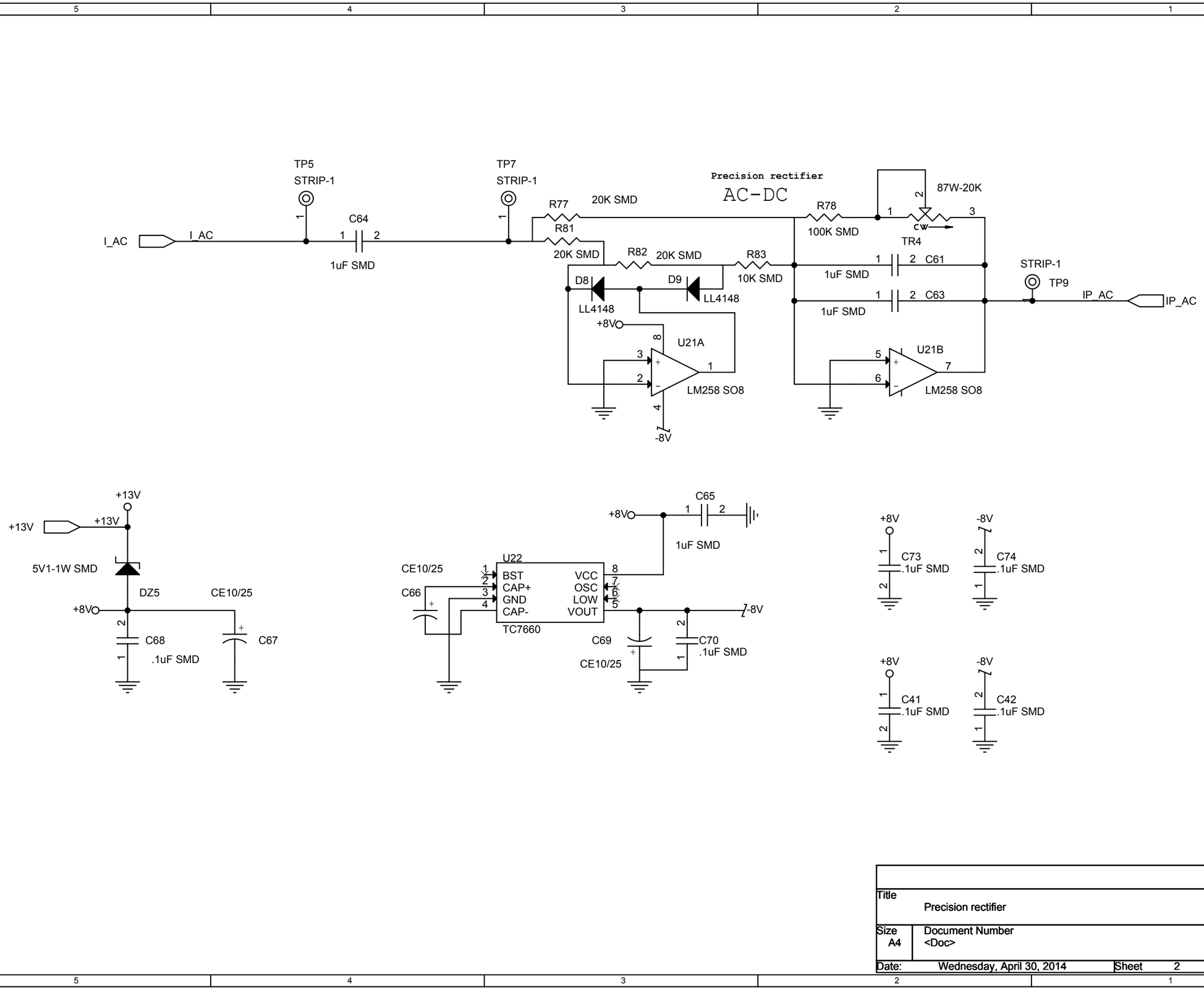
Precision rectifier
AC-DC
TP5
STRIP-1
TP7
STRIP-1
I_AC
I_AC
C64
1uF SMD
R77
20K SMD
R81
20K SMD
R82
20K SMD
R83
10K SMD
R78
100K SMD
87W-20K
CW
TR4
C61
1uF SMD
C63
1uF SMD
D8
LL4148
D9
LL4148
+8V
U21A
LM258 SO8
-8V
U21B
LM258 SO8
STRIP-1
TP9
IP_AC
IP_AC
+13V
+13V
+13V
5V1-1W SMD
DZ5
CE10/25
+8V
C68
.1uF SMD
C67
C65
1uF SMD
U22
CE10/25
C66
BST
CAP+
GND
CAP-
VCC
OSC
LOW
VOUT
TC7660
-8V
C69
CE10/25
C70
.1uF SMD
+8V
C73
.1uF SMD
-8V
C74
.1uF SMD
+8V
C41
.1uF SMD
-8V
C42
.1uF SMD
Title
Precision rectifier
Size
A4
Document Number
<Doc>
Rev
1
Date:
Wednesday, April 30, 2014
Sheet
2
of
2

PFC CONTROLLER 4280 R1 Revised: Wednesday, April 30, 2014
PFC4280CNT_R0.DSN Revision: 1

Bill Of Materials Page1

Item	Quantity	Reference	Part
1	29	C1,C3,C15,C24,C26,C30, C31,C33,C39,C41,C42,C43, C44,C45,C47,C48,C50,C51, C52,C53,C57,C59,C60,C68, C70,C71,C72,C73,C74	.1uF SMD
2	11	C2,C4,C8,C20,C27,C38,C58, C61,C63,C64,C65	1uF SMD
3	2	C5,C32	0.22uF SMD
4	2	C6,C7	47KpF SMD
5	4	C9,C25,C35,C36	4.7uF SMD
6	4	C10,C12,C13,C49	560pF SMD
7	2	C11,C14	3K3pF SMD
8	2	C16,C18	330pF SMD
9	2	C17,C19	2K2pF SMD
10	1	C21	2.2uF SMD
11	2	C22,C23	220pF SMD
12	2	C28,C77	10KpF SMD
13	2	C29,C34	27pF SMD
14	4	C37,C54,C55,C56	1KpF SMD
15	5	TR3,R25,R26,C40,R50	X
16	3	C66,C67,C69	CE10/25
17	1	C75	CP33nF
18	1	C76	22KpF SMD
19	1	C78	CP6K8pF
20	6	DL1,DL2,DL3,DL4,DL5,DL6	ROSSO 0805
21	3	DZ1,DZ2,DZ5	5V1-1W SMD
22	1	DZ4	LM4040-5V-1%
23	10	D1,D2,D3,D4,D5,D6,D7,D8, D9,D10	LL4148
24	4	FIX1,FIX2,FIX3,FIX4	FIX35
25	2	JP1,JP10	MICS10
26	11	JP2,JP3,JP4,JP5,JP6,JP7, JP8,JP9,JP11,JP12,JP13	STRIP 2
27	1	J1	MICS 4
28	2	J2,J5	MLSS4
29	1	J3	STRIP 5
30	1	J4	STRIP 6
31	1	K1	FTR-B3-GA-012
32	2	OC1,OC3	K10102A SMD
33	5	Q1,Q2,Q3,Q4,Q5	BCR135
34	7	R1,R3,R4,R6,R31,R90,R98	10R SMD
35	2	R2,R7	5R6 1210
36	1	R5	59K SMD
37	2	R8,R42	4K7 SMD
38	3	R9,R10,R69	3K9 SMD
39	6	R11,R12,R37,R41,R57,R74	2K2 SMD
40	1	R13	47K SMD
41	1	R14	75K SMD
42	2	R15,R61	56K SMD
43	2	R16,R17	8K2 SMD
44	1	R18	68K SMD
45	1	R19	150K SMD
46	1	R20	3K3 SMD
47	6	R21,R22,R23,R24,R67,R93	1K SMD
48	2	R27,R55	100R SMD
49	20	R28,R29,R30,R33,R34,R39, R43,R44,R45,R46,R47,R48, R49,R51,R60,R63,R64,R68, R83,R97	10K SMD
50	6	R32,R52,R73,R77,R81,R82	20K SMD
51	1	R35	10M SMD
52	4	R36,R62,R66,R94	1K5 SMD
53	1	R38	NTC-10K SMD
54	1	R40	9K53 SMD
55	1	R54	330R SMD
56	2	R58,R99	560R SMD
57	1	R70	27K SMD
58	1	R78	100K SMD
59	2	R91,R96	220K SMD
60	1	R92	1K8 SMD
61	1	R95	1K69 SMD
62	10	TP1,TP2,TP3,TP4,TP5,TP7, TP8,TP9,TP10,TP11	STRIP-1
63	1	TR1	X-3106X-10K
64	1	TR4	87W-20K
65	2	U1,U3	TC4420
66	1	U2	UCC28070
67	1	U4	TC1232COA
68	1	U5	MC9S08AC16CFGE 44- LQFP
69	1	U6	7805 D2PACK
70	1	U7	74AHC1G14
71	2	U9,U21	LM258 SO8
72	1	U11	25LC640-I/SN
73	1	U22	TC7660
74	1	Y1	QA461-14.7456MHz

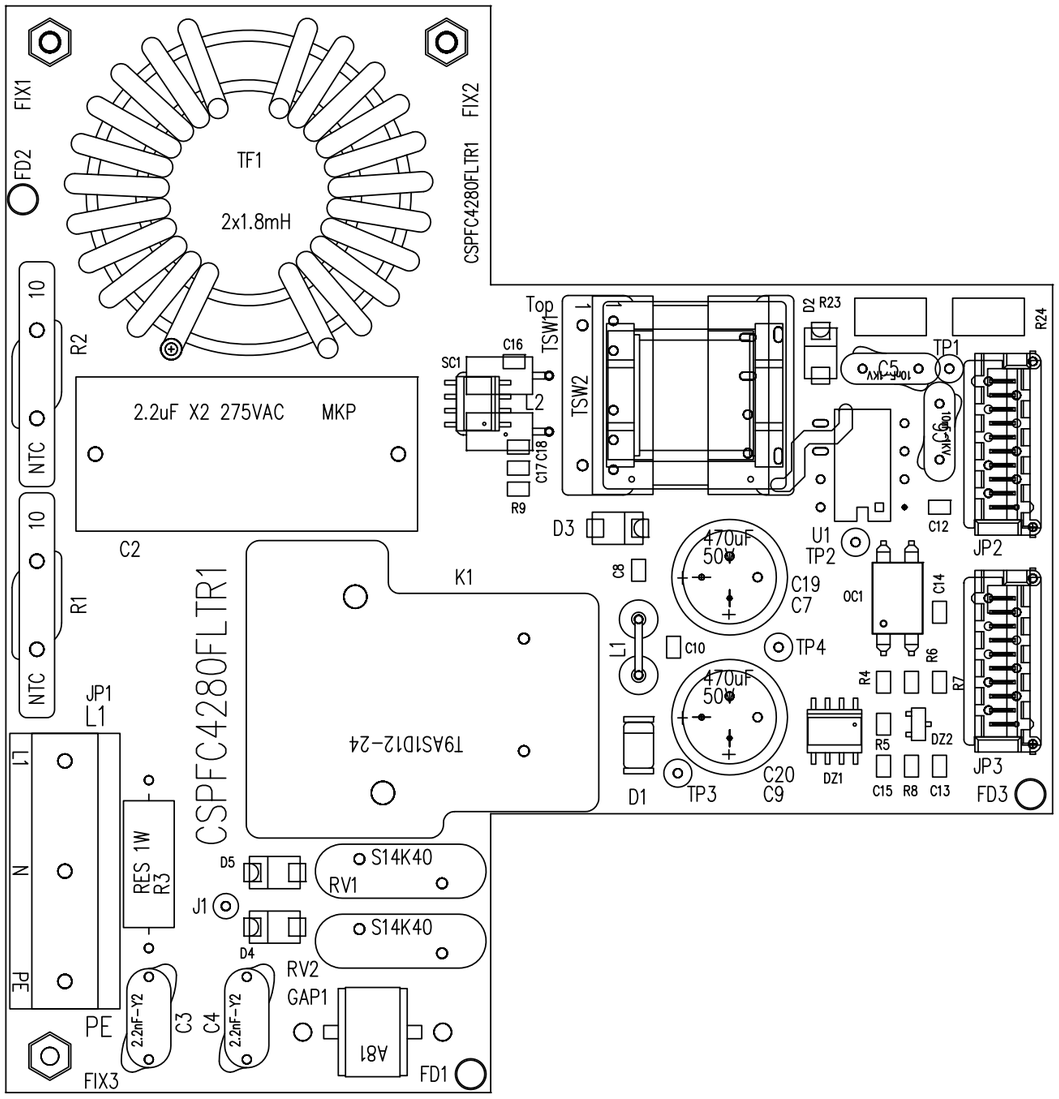

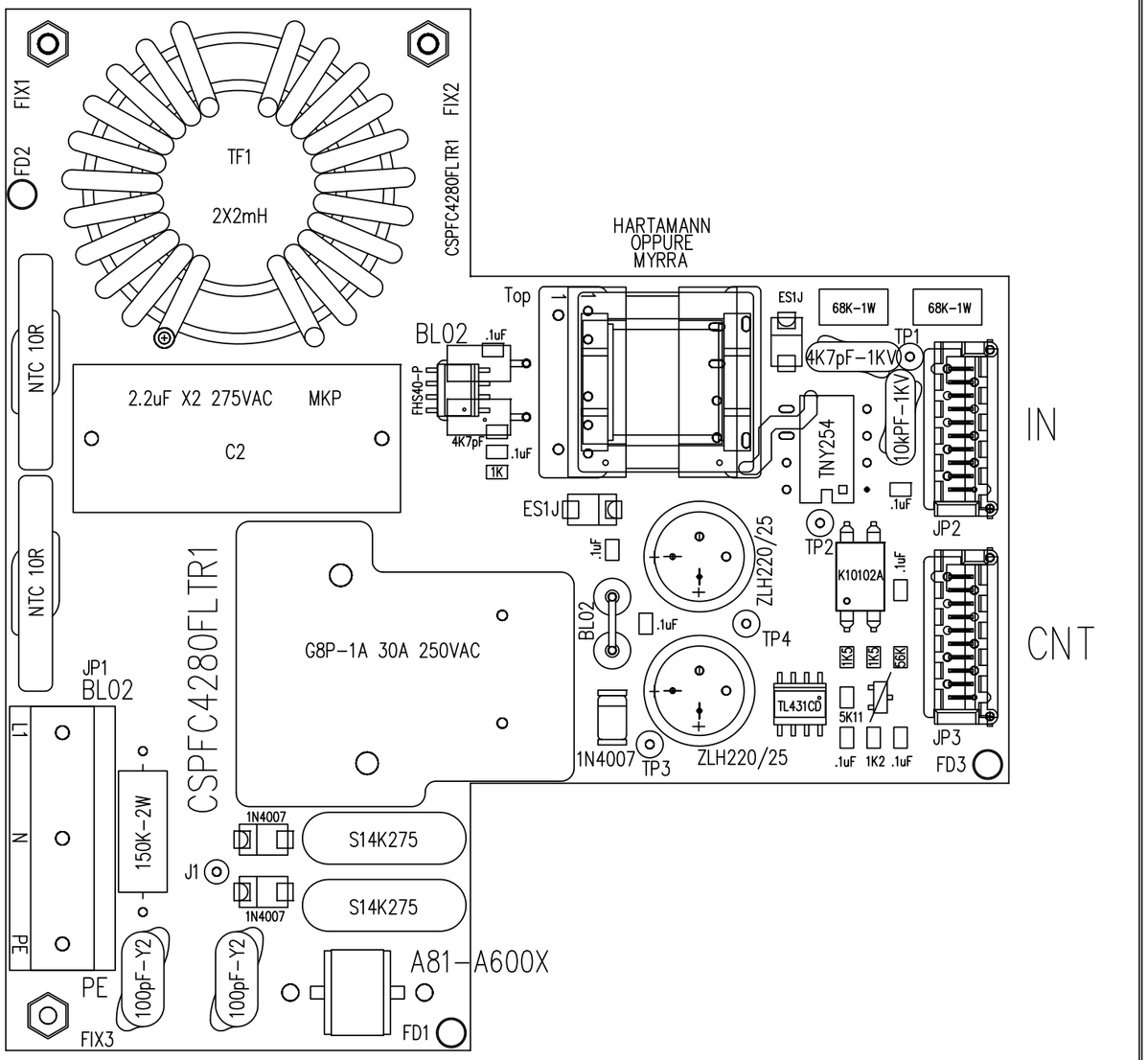

ARCHIVIO: X:\WORKDWG\	
TITLE PIANO DI MONTAGGIO FLT PFC4280	
DOCUMENT NUMBER PFC4280_FLT_R1_MNT.DWG	REV 1
DATE: 4 MARZO 2014	

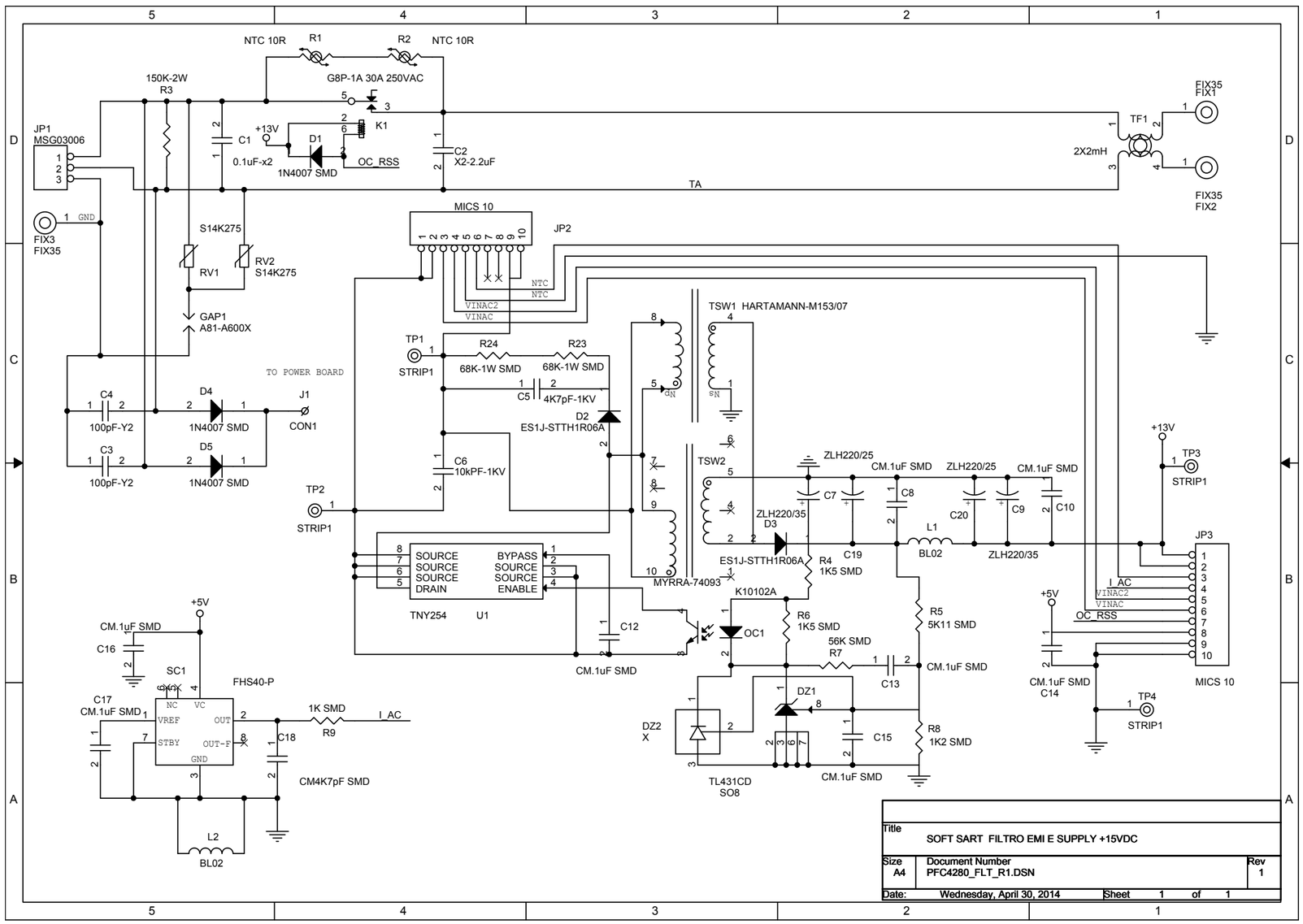

SOFT SART FILTRO EMI E SUPPLY +15VDC
Revised: Wednesday, April 30, 2014
PFC4280_FLT_R1.DSN Revision: 1

Item	Qty	Reference	Part
1	1	C1	0.1uF-x2
2	1	C2	X2-2.2uF
3	2	C3,C4	100pF-Y2
4	1	C5	4K7pF-1KV
5	1	C6	10kPF-1KV
6	2	C7,C9	ZLH220/35
7	8	C8,C10,C12,C13, C14,C15,C16,C17	CM.1uF SMD
8	1	C18	CM4K7pF SMD
9	2	C19,C20	ZLH220/25
10	1	DZ1	TL431CD
11	1	DZ2	X
12	3	D1,D4,D5	1N4007 SMD
13	2	D2,D3	ES1J-STTH1R06A
14	3	FIX1,FIX2,FIX3	FIX35
15	1	GAP1	A81-A600X
16	1	JP1	MSG03006
17	2	JP2,JP3	MICS 10
18	1	J1	CON1
19	1	K1	G8P-1A 30A 250VAC
20	2	L1,L2	BL02
21	1	OC1	K10102A
22	2	RV1,RV2	S14K275
23	2	R1,R2	NTC 10R
24	1	R3	150K-2W
25	2	R4,R6	1K5 SMD
26	1	R5	5K11 SMD
27	1	R7	56K SMD
28	1	R8	1K2 SMD
29	1	R9	1K SMD
30	2	R23,R24	68K-1W SMD
31	1	SC1	FHS40-P
32	1	TF1	2X2mH
33	4	TP1,TP2,TP3,TP4	STRIP1
34	1	TSW1	HARTAMANN-M153/07
35	1	TSW2	MYRRA-74093
36	1	U1	TNY254

PIANO DI MONTAGGIO INPUT PFC4280R1

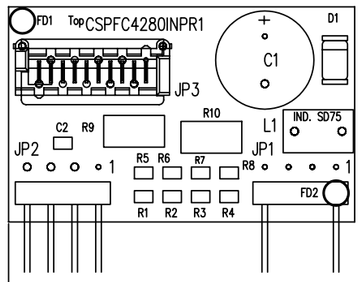

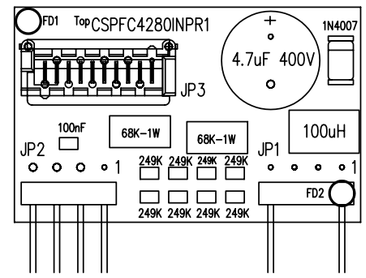

PIANO DI MONTAGGIO MOS PFC4280R1

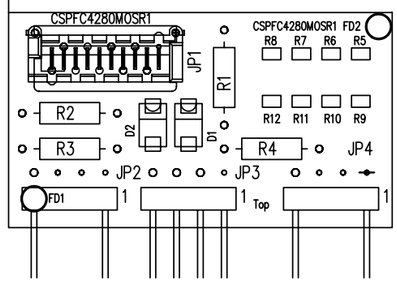

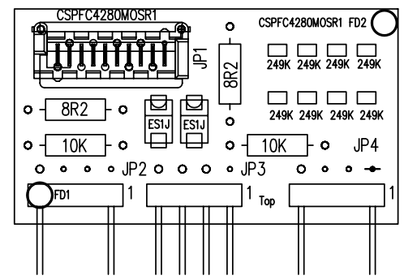

ARCHIVIO: X:\WORKDWG\	
TITLE PIANO DI MONTAGGIO INPUT MOS PFC4280	
DOCUMENT NUMBER PFC4280INPR1_MOSR1_MNT.DWG	REV
DATE: 4 MARZO 2014	

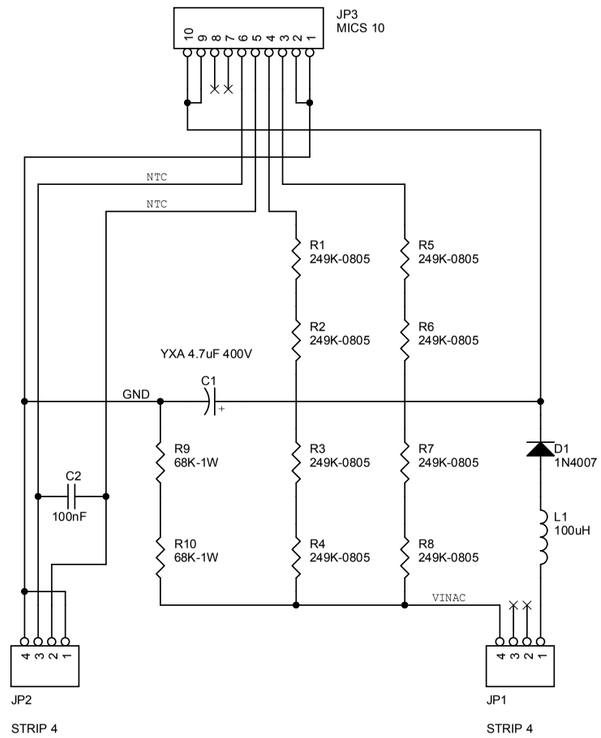

Title	MODULO PFC 4280 INPUT	
Size A4	Document Number <Doc>	Rev 0
Date: Wednesday, April 30, 2014	Sheet 1 of 1	

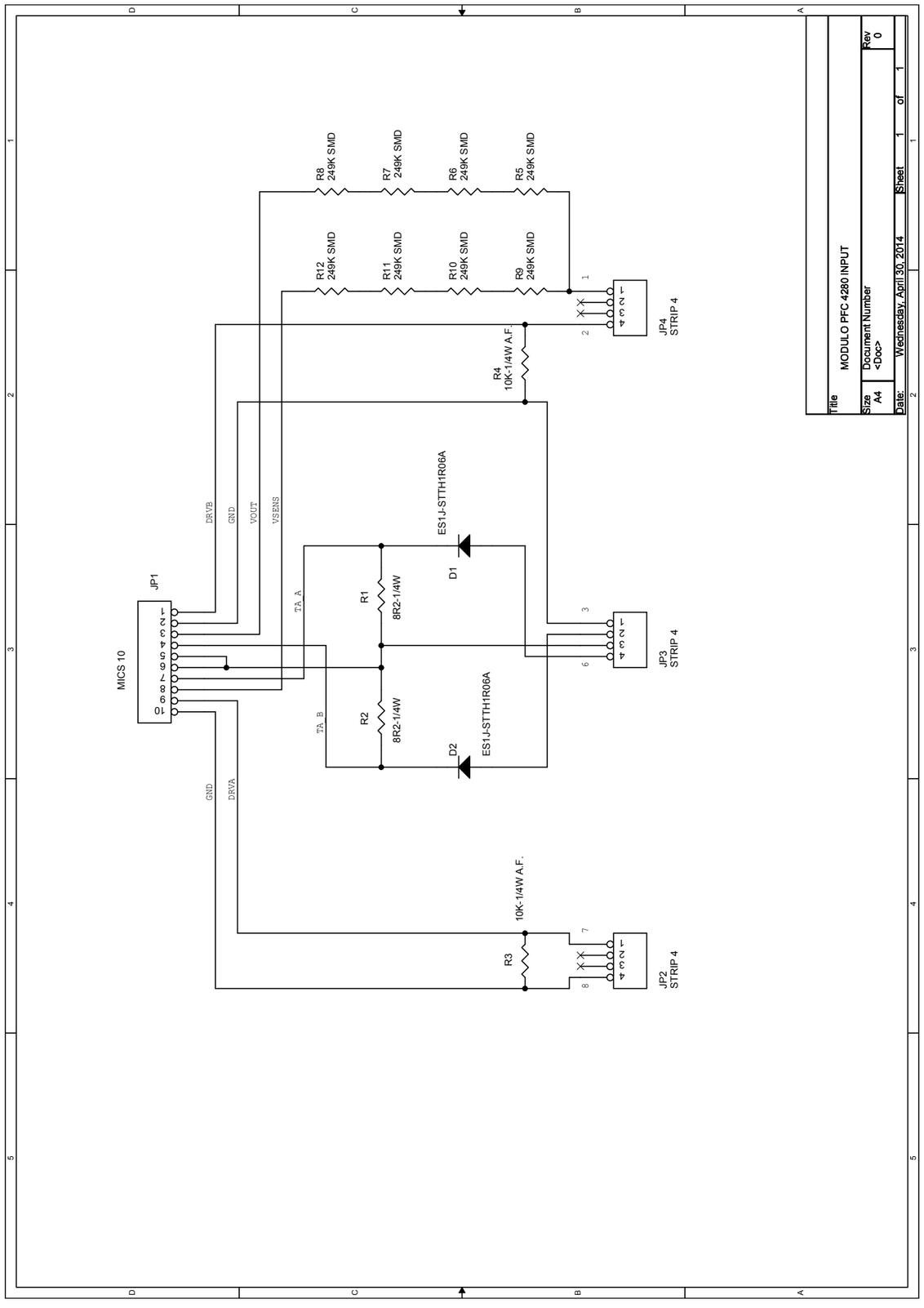

MODULO PFC 4280 INPUT
Revised: Wednesday, April 30, 2014
Revision: 0

Item	Qty	Reference	Part
1	1	C1	YXA 4.7uF 400V
2	1	C2	100nF
3	1	D1	1N4007
4	2	JP1,JP2	STRIP 4
5	1	JP3	MICS 10
6	1	L1	100uH
7	8	R1,R2,R3,R4, R5,R6,R7,R8	249K-0805
8	2	R9,R10	68K-1W

MODULO PFC 4280 INPUT
Revised: Wednesday, April 30, 2014
Revision: 0

Item	Qty	Reference	Part
1	2	D1,D2	ES1J-STTH1R06A
2	1	JP1	MICS 10
3	3	JP2,JP3,JP4	STRIP 4
4	2	R1,R2	8R2-1/4W
5	2	R3,R4	10K-1/4W A.F.
6	7	R5,R6,R8,R9, R10,R11,R12	249K SMD
7	1	R7	249K SMD

8.8.1 PFC Settings

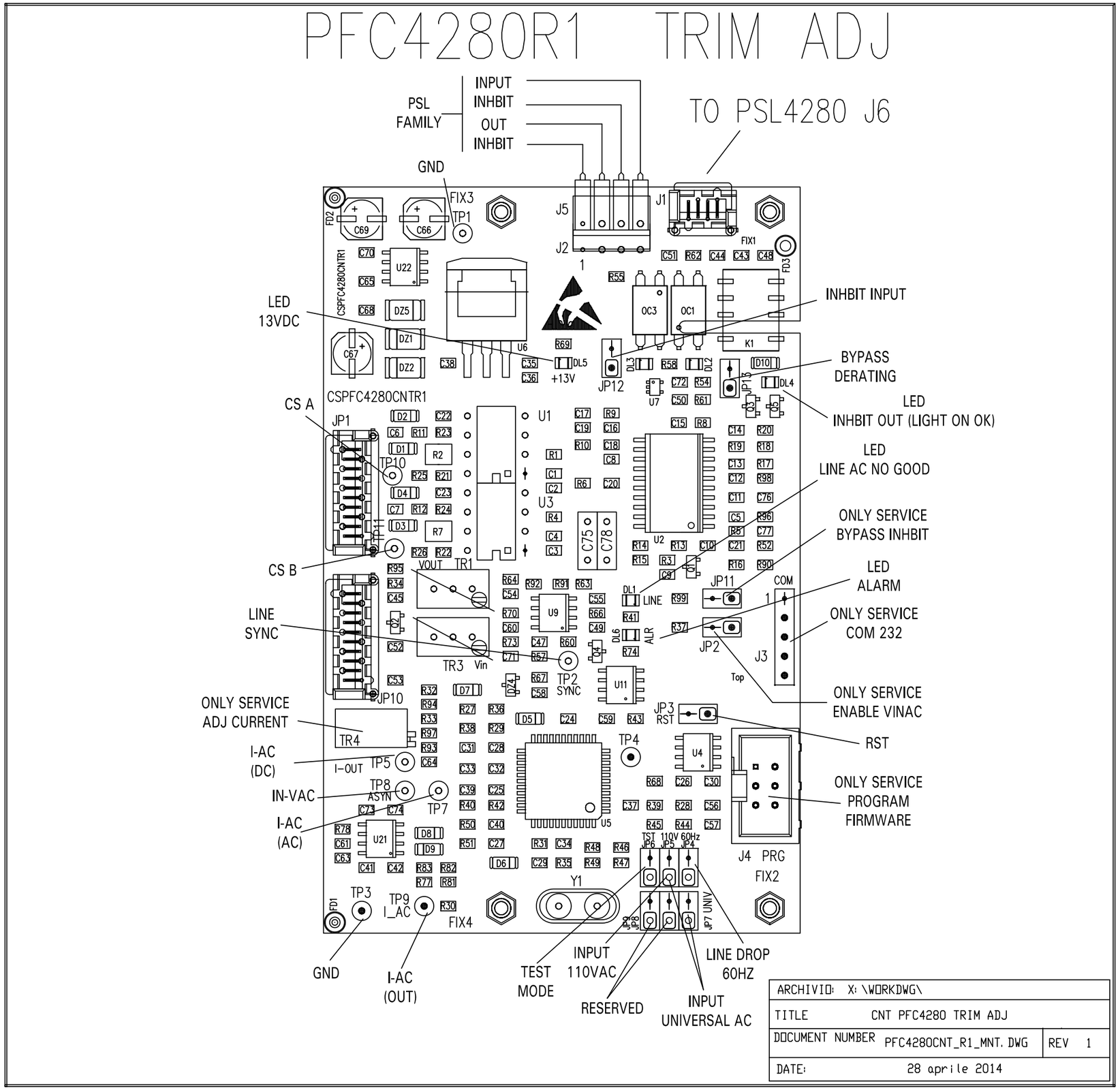

8.9 Power supply (KPSL4280.LC)

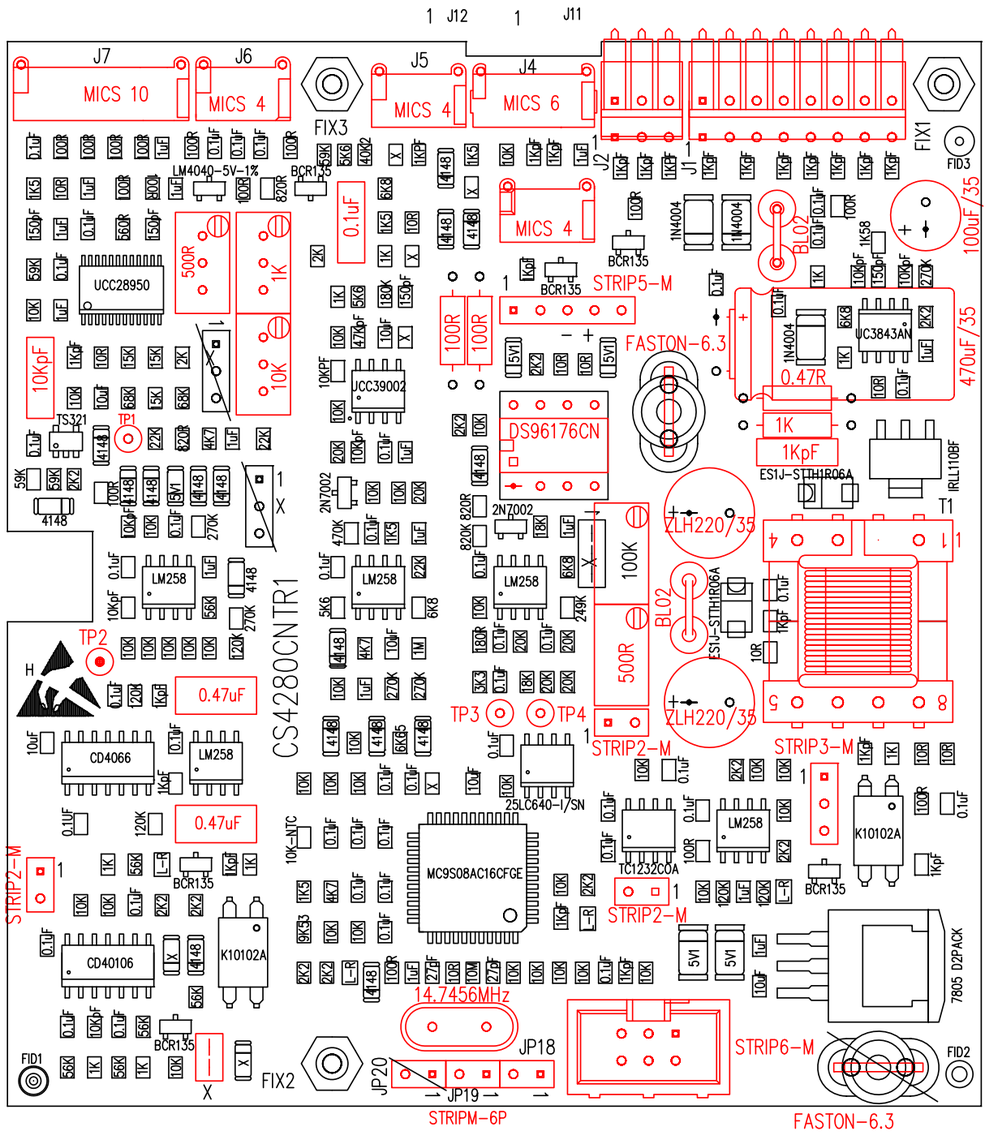

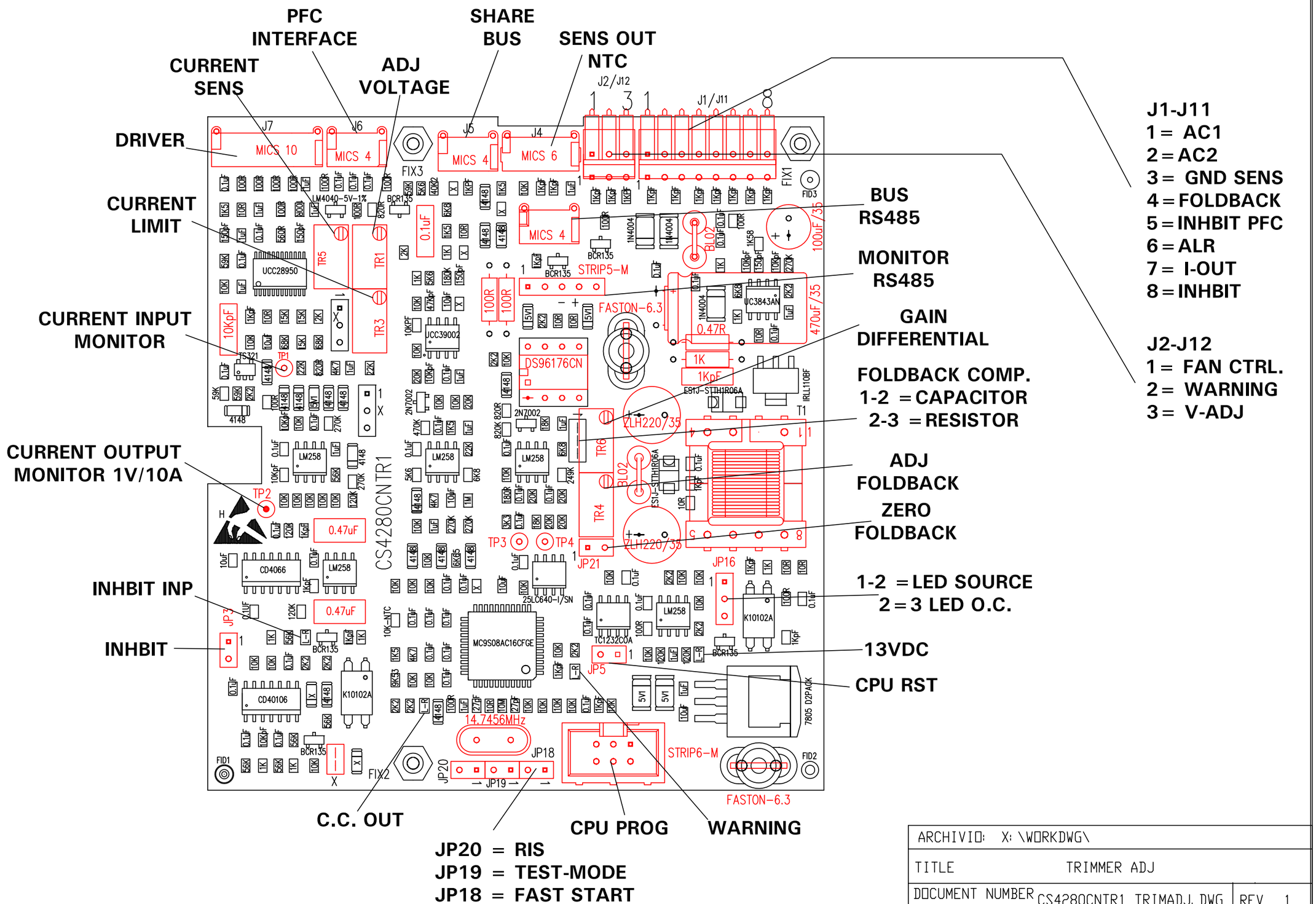

ARCHIVIO:	X:\WORKDWG\
TITLE	TRIMMER ADJ
DOCUMENT NUMBER	CS4280CNTR1_TRIMADJ.DWG
REV	1
DATE:	20 GIUGNO 2013

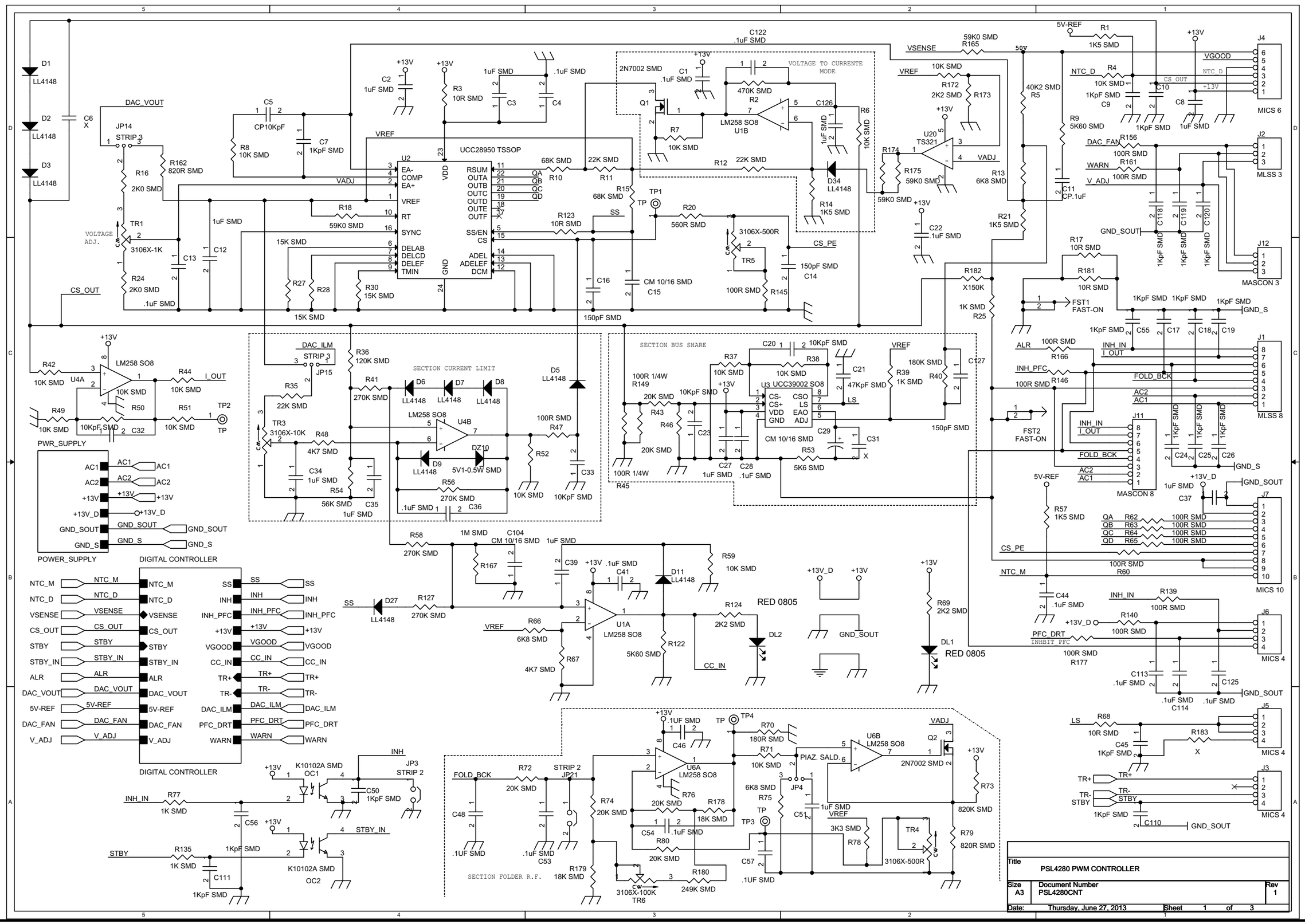
UCC28950 TSSOP
LM258 SO8
U3 UCC39002 SO8
TS321
2N7002 SMD
VOLTAGE TO CURRENTE MODE
SECTION CURRENT LIMIT
SECTION BUS SHARE
SECTION FOLDER R.F.
RED 0805
PWR_SUPPLY
POWER_SUPPLY
DIGITAL CONTROLLER
MICS 6
MICS 10
MICS 4
MASCON 3
MASCON 8
MLSS 3
MLSS 8
FST1 FAST-ON
FST2 FAST-ON
PSL4280 PWM CONTROLLER
Document Number PSL4280CNT
Rev 1
Thursday, June 27, 2013
Sheet 1 of 3

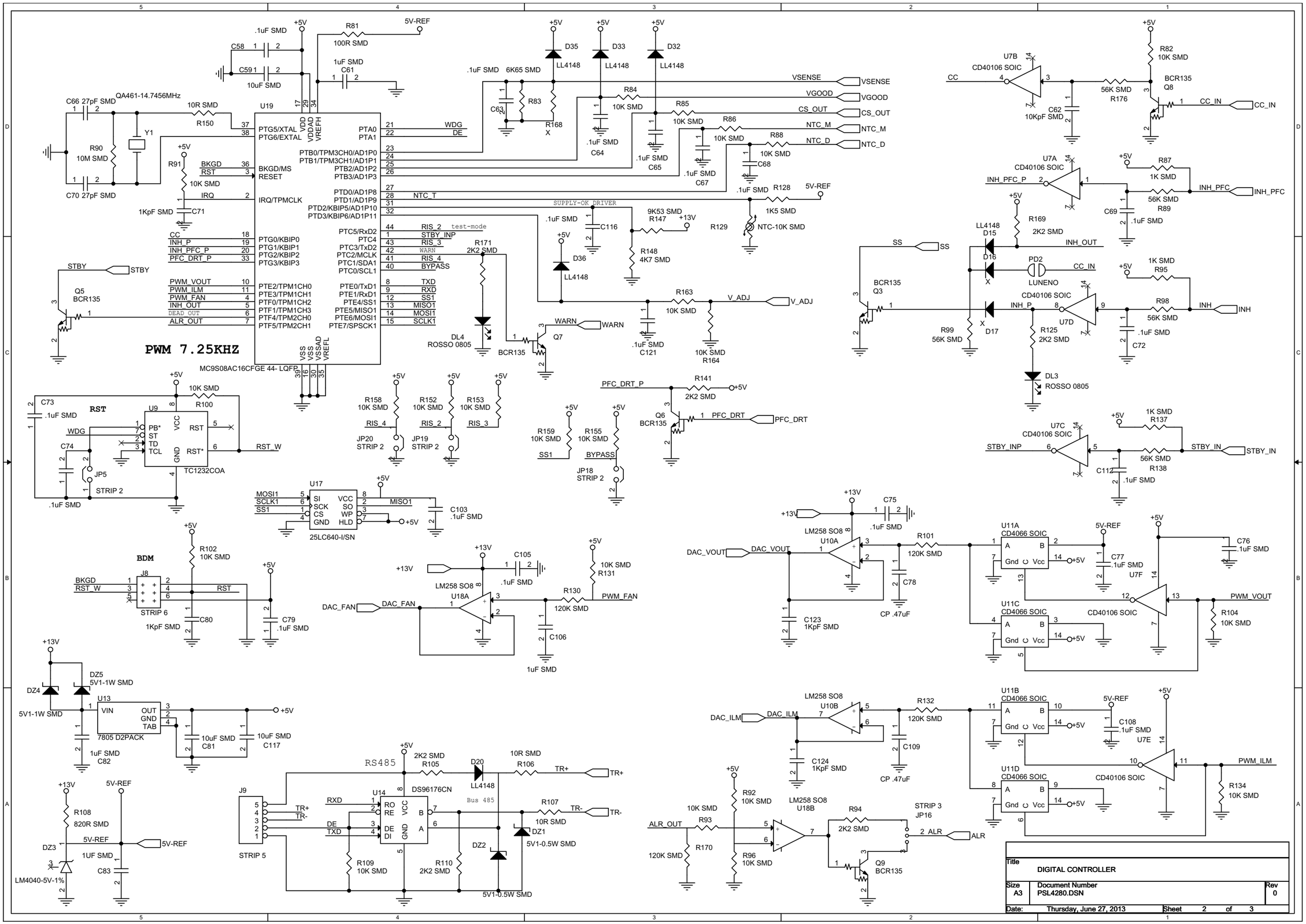
PWM 7.25KHZ
MC9S08AC16CFGE 44- LQFP
U19
QA461-14.7456MHz
Y1
C66 27pF SMD
C70 27pF SMD
R90 10M SMD
R150 10R SMD
R81 100R SMD
5V-REF
C58 .1uF SMD
C59 10uF SMD
C61 1uF SMD
R91 10K SMD
C71 1KpF SMD
BKGD
RST
IRQ
CC
INH_P
INH_PFC_P
PFC_DRT_P
PWM_VOUT
PWM_ILM
PWM_FAN
INH_OUT
DEAD OUT
ALR_OUT
STBY
Q5 BCR135
WDG
DE
NTC_T
RIS_2 test-mode
STBY_INP
RIS_3
WARN
RIS_4
BYPASS
TXD
RXD
SS1
MISO1
MOSI1
SCLK1
SCLK1
R171 2K2 SMD
DL4 ROSSO 0805
Q7 BCR135
WARN
SUPPLY-OK DRIVER
C116 .1uF SMD
R148 4K7 SMD
9K53 SMD R147
+13V
D36 LL4148
R129
NTC-10K SMD
R128 1K5 SMD
C121 .1uF SMD
R163 10K SMD
R164 10K SMD
V_ADJ
D35 LL4148
D33 LL4148
D32 LL4148
C63 .1uF SMD
R83 6K65 SMD
R168 X
C64 .1uF SMD
R84 10K SMD
C65 .1uF SMD
R85 10K SMD
C67 .1uF SMD
R86 10K SMD
C68 .1uF SMD
R88 10K SMD
VSENSE
VGOOD
CS_OUT
NTC_M
NTC_D
U7B CD40106 SOIC
R82 10K SMD
BCR135 Q8
R176 56K SMD
C62 10KpF SMD
CC_IN
U7A CD40106 SOIC
R87 1K SMD
R89 56K SMD
C69 .1uF SMD
INH_PFC
R169 2K2 SMD
INH_OUT
LL4148 D15
D16 X
PD2 LUNENO
R95 1K SMD
U7D CD40106 SOIC
R98 56K SMD
C72 .1uF SMD
INH
R99 56K SMD
D17 X
R125 2K2 SMD
DL3 ROSSO 0805
U7C CD40106 SOIC
R137 1K SMD
R138 56K SMD
C112 .1uF SMD
STBY_IN
C73 .1uF SMD
RST
U9 TC1232COA
R100 10K SMD
C74
JP5 STRIP 2
RST_W
R158 10K SMD
R152 10K SMD
R153 10K SMD
JP20 STRIP 2
JP19 STRIP 2
R159 10K SMD
R155 10K SMD
JP18 STRIP 2
PFC_DRT_P
R141 2K2 SMD
Q6 BCR135
PFC_DRT
U17 25LC640-I/SN
C103 .1uF SMD
R102 10K SMD
BDM
J8 STRIP 6
C80 1KpF SMD
C79 .1uF SMD
R131 10K SMD
R130 120K SMD
C105 .1uF SMD
LM258 SO8 U18A
C106 1uF SMD
DAC_FAN
PWM_FAN
DZ4 5V1-1W SMD
DZ5 5V1-1W SMD
U13 7805 D2PACK
C82 1uF SMD
C81 10uF SMD
C117 10uF SMD
R108 820R SMD
DZ3 LM4040-5V-1%
C83 1UF SMD
RS485
U14 DS96176CN
R105 2K2 SMD
D20 LL4148
R106 10R SMD
R107 10R SMD
DZ1 5V1-0.5W SMD
DZ2 5V1-0.5W SMD
R109 10K SMD
R110 2K2 SMD
J9 STRIP 5
TR+
TR-
U11A CD4066 SOIC
R101 120K SMD
C78 CP .47uF
C123 1KpF SMD
DAC_VOUT
U11C CD4066 SOIC
R104 10K SMD
C76 .1uF SMD
C77 .1uF SMD
U7F CD40106 SOIC
U10B LM258 SO8
R132 120K SMD
C109 CP .47uF
C124 1KpF SMD
DAC_ILM
U11B CD4066 SOIC
U11D CD4066 SOIC
C108 .1uF SMD
U7E CD40106 SOIC
R134 10K SMD
PWM_ILM
R92 10K SMD
R93 10K SMD
R96 10K SMD
R170 120K SMD
U18B LM258 SO8
R94 2K2 SMD
STRIP 3 JP16
2 ALR
Q9 BCR135
ALR
Title DIGITAL CONTROLLER
Size A3
Document Number PSL4280.DSN
Rev 0
Date: Thursday, June 27, 2013
Sheet 2 of 3

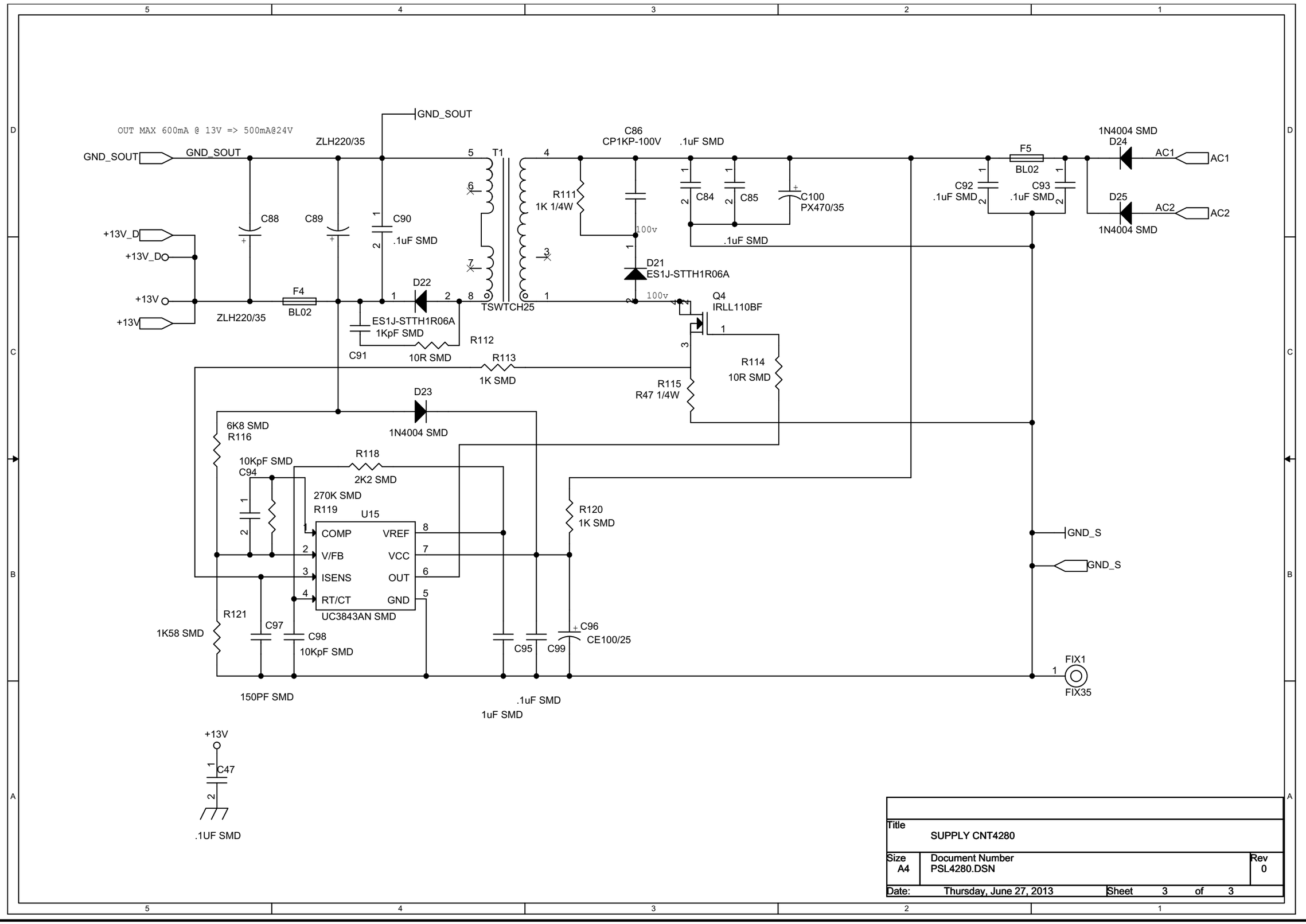

Title	SUPPLY CNT4280	
Size A4	Document Number PSL4280.DSN	Rev 0
Date: Thursday, June 27, 2013	Sheet 3 of 3	

PSL4280 PWM CONTROLLER Revised: Thursday, June 27, 2013
PSL4280CNT Revision: 1

Item	Quantity	Reference	Part
1	44	C1,C4,C13,C22,C28,C36, C41,C44,C46,C47,C48,C53, C54,C57,C58,C63,C64,C65, C67,C68,C69,C72,C73,C74, C75,C76,C77,C79,C84,C85, C90,C92,C93,C99,C103, C105,C108,C112,C113,C114, C116,C121,C122,C125	.1uF SMD
2	16	C2,C3,C8,C12,C27,C34,C35, C37,C39,C51,C61,C82,C83, C95,C106,C126	1uF SMD
3	1	C5	CP10KpF
4	6	C6,D16,D17,C31,R168,R183	X
5	23	C7,C9,C10,C17,C18,C19, C24,C25,C26,C45,C50,C55, C56,C71,C80,C91,C110, C111,C118,C119,C120,C123, C124	1KpF SMD
6	1	C11	CP.1uF
7	4	C14,C16,C97,C127	150pF SMD
8	3	C15,C29,C104	CM 10/16 SMD
9	7	C20,C23,C32,C33,C62,C94, C98	10KpF SMD
10	1	C21	47KpF SMD
11	3	C59,C81,C117	10uF SMD
12	2	C66,C70	27pF SMD
13	1	C78	CP .47uF
14	1	C86	CP1KP-100V
15	2	C88,C89	ZLH220/35
16	1	C96	CE100/25
17	1	C100	PX470/35
18	1	C109	CP .47uF
19	4	DL1,DL2,DL3,DL4	ROSSO 0805
20	3	DZ1,DZ2,DZ10	5V1-0.5W SMD
21	1	DZ3	LM4040-5V-1%
22	2	DZ4,DZ5	5V1-1W SMD
23	17	D1,D2,D3,D5,D6,D7,D8,D9, D11,D15,D20,D27,D32,D33, D34,D35,D36	LL4148
24	2	D21,D22	ES1J-STTH1R06A
25	3	D23,D24,D25	1N4004 SMD
26	1	FIX1	FIX35
27	2	FST1,FST2	FAST-ON
28	2	F4,F5	BL02
29	6	JP3,JP5,JP18,JP19,JP20, JP21	STRIP 2
30	1	JP4	PIAZ. SALD.
31	3	JP14,JP15,JP16	STRIP 3
32	1	J1	MLSS 8
33	1	J2	MLSS 3
34	3	J3,J5,J6	MICS 4
35	1	J4	MICS 6
36	1	J7	MICS 10
37	1	J8	STRIP 6
38	1	J9	STRIP 5
39	1	J11	MASCON 8
40	1	J12	MASCON 3
41	2	OC1,OC2	K10102A SMD
42	1	PD2	LUNENO
43	2	Q1,Q2	2N7002 SMD
44	6	Q3,Q5,Q6,Q7,Q8,Q9	BCR135
45	1	Q4	IRLL110BF
46	5	R1,R14,R21,R57,R128	1K5 SMD
47	1	R2	470K SMD
48	10	R3,R17,R68,R106,R107, R112,R114,R123,R150,R181	10R SMD
49	37	R4,R6,R7,R8,R37,R38,R42, R44,R49,R50,R51,R52,R59, R71,R82,R84,R85,R86,R88, R91,R92,R93,R96,R100, R102,R104,R109,R131,R134, R152,R153,R155,R158,R159, R163,R164,R172	10K SMD
50	1	R5	40K2 SMD
51	2	R9,R122	5K60 SMD
52	2	R10,R15	68K SMD
53	3	R11,R12,R35	22K SMD
54	4	R13,R66,R75,R116	6K8 SMD
55	2	R16,R24	2K0 SMD
56	4	R18,R165,R174,R175	59K0 SMD
57	1	R20	560R SMD
58	9	R25,R39,R77,R87,R95,R113, R120,R135,R137	1K SMD
59	3	R27,R28,R30	15K SMD
60	5	R36,R101,R130,R132,R170	120K SMD
61	1	R40	180K SMD
62	5	R41,R56,R58,R119,R127	270K SMD
63	6	R43,R46,R72,R74,R76,R80	20K SMD
64	2	R45,R149	100R 1/4W
65	15	R47,R60,R62,R63,R64,R65, R81,R139,R140,R145,R146, R156,R161,R166,R177	100R SMD
66	3	R48,R67,R148	4K7 SMD
67	1	R53	5K6 SMD
68	6	R54,R89,R98,R99,R138, R176	56K SMD
69	11	R69,R94,R105,R110,R118, R124,R125,R141,R169,R171, R173	2K2 SMD
70	1	R70	180R SMD
71	1	R73	820K SMD
72	1	R78	3K3 SMD
73	3	R79,R108,R162	820R SMD
74	1	R83	6K65 SMD
75	1	R90	10M SMD
76	1	R111	1K 1/4W
77	1	R115	R47 1/4W
78	1	R121	1K58 SMD
79	1	R129	NTC-10K SMD
80	1	R147	9K53 SMD
81	1	R167	1M SMD
82	2	R178,R179	18K SMD
83	1	R180	249K SMD
84	1	R182	X150K
85	4	TP1,TP2,TP3,TP4	TP
86	1	TR1	3106X-1K
87	1	TR3	3106X-10K
88	2	TR4,TR5	3106X-500R
89	1	TR6	3106X-100K
90	1	T1	TSWTCH25
91	5	U1,U4,U6,U10,U18	LM258 SO8
92	1	U2	UCC28950 TSSOP
93	1	U3	UCC39002 SO8
94	1	U7	CD40106 SOIC
95	1	U9	TC1232COA
96	1	U11	CD4066 SOIC
97	1	U13	7805 D2PACK
98	1	U14	DS96176CN
99	1	U15	UC3843AN SMD
100	1	U17	25LC640-I/SN
101	1	U19	MC9S08AC16CFGE 44- LQFP
102	1	U20	TS321
103	1	Y1	QA461-14.7456MHz

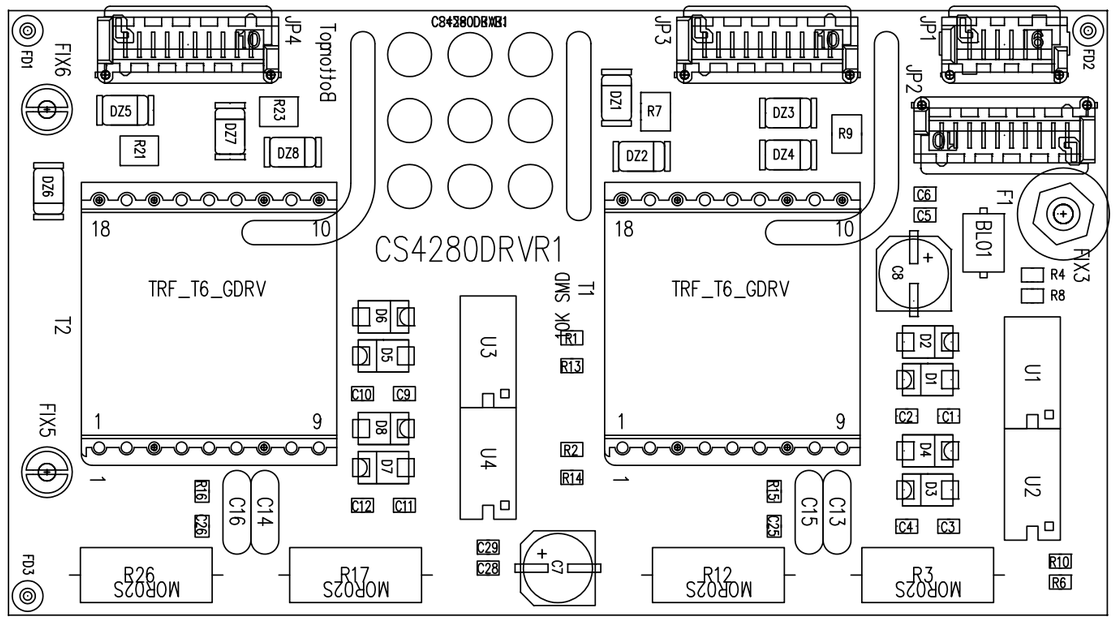

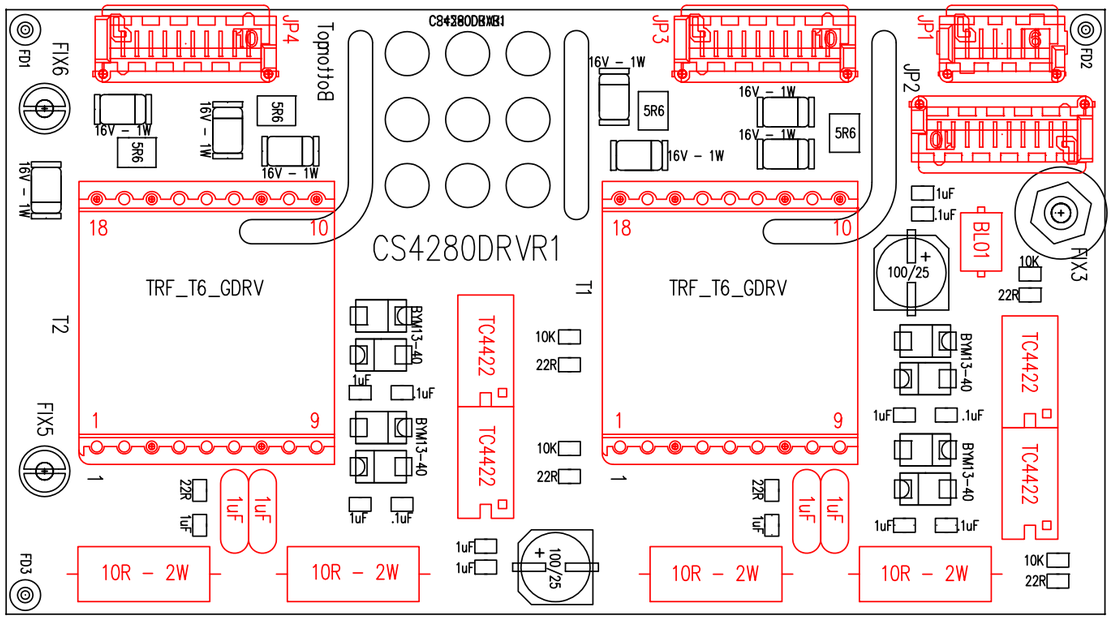

DRIVER PSL4280 Revised: Monday, July 01, 2013
CS4280_DRV.DSN Revision: 1

Item	Quantity	Reference	Part
1	5	C1,C3,C5,C9,C11	CM.1uF SMD
2	9	C2,C4,C6,C10,C12,C25,C26, C28,C29	CM1uF SMD
3	2	C7,C8	100/25 SMD
4	4	C13,C14,C15,C16	CM1uF
5	8	DZ1,DZ2,DZ3,DZ4,DZ5,DZ6, DZ7,DZ8	16V-1W SMD
6	8	D1,D2,D3,D4,D5,D6,D7,D8	BYM13-40 SMD
7	1	F1	BL01
8	1	JP1	MICS6
9	3	JP2,JP3,JP4	MICS10
10	4	R1,R2,R4,R6	10K SMD
11	4	R3,R12,R17,R26	10R-2W
12	4	R7,R9,R21,R23	5R6 SMD
13	6	R8,R10,R13,R14,R15,R16	22R SMD
14	2	T1,T2	T6-GDRV
15	4	U1,U2,U3,U4	TC4422

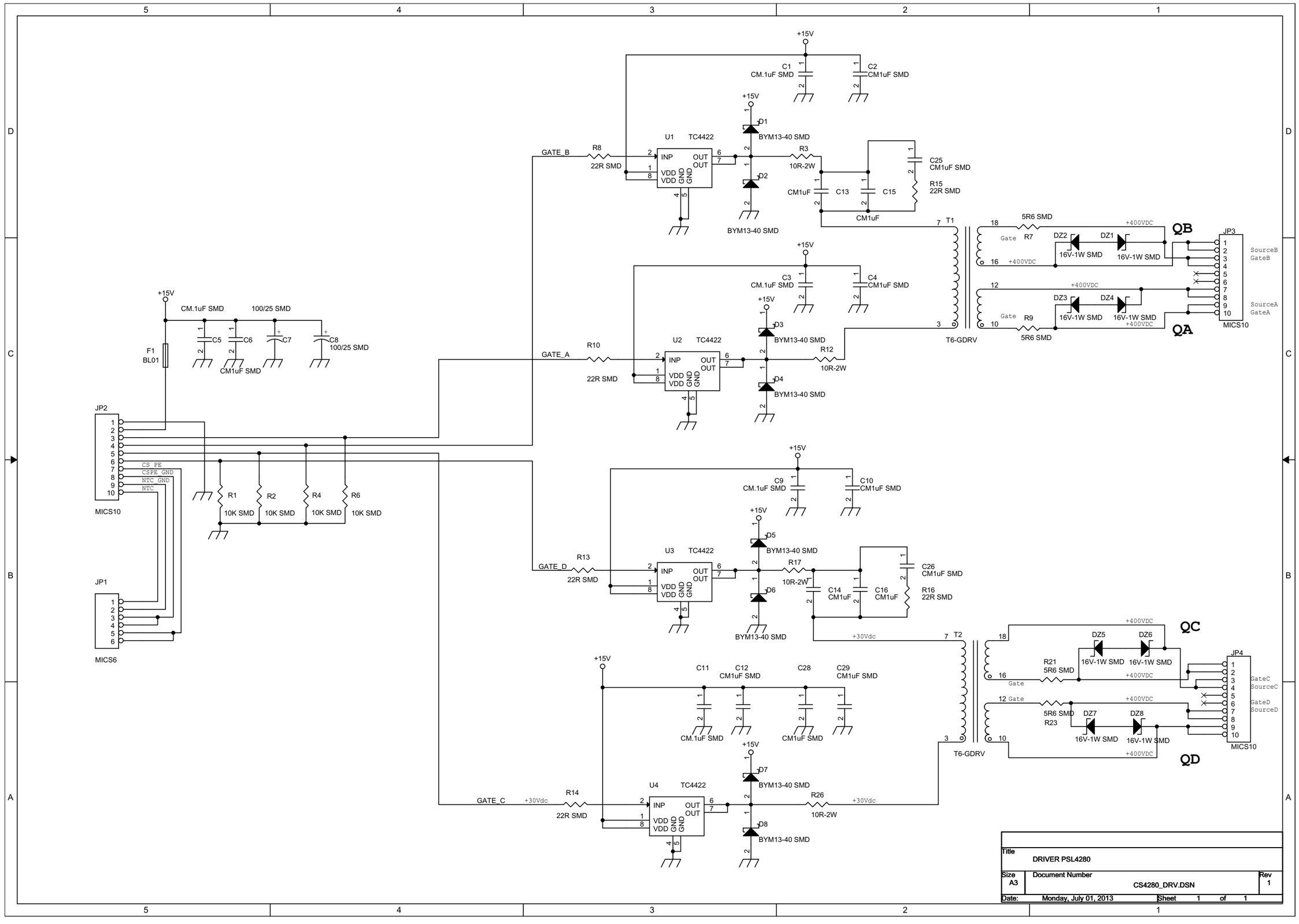
+15V
C1 CM.1uF SMD
C2 CM1uF SMD
U1 TC4422
GATE_B
R8 22R SMD
INP
VDD
OUT
GND
D1 BYM13-40 SMD
D2 BYM13-40 SMD
R3 10R-2W
C13 CM1uF
C15 CM1uF
C25 CM1uF SMD
R15 22R SMD
T1
T6-GDRV
5R6 SMD
Gate
R7
DZ1 16V-1W SMD
DZ2 16V-1W SMD
+400VDC
QB
JP3
SourceB
GateB
C3 CM.1uF SMD
C4 CM1uF SMD
U2 TC4422
GATE_A
R10 22R SMD
D3 BYM13-40 SMD
D4 BYM13-40 SMD
R12 10R-2W
R9
DZ3 16V-1W SMD
DZ4 16V-1W SMD
QA
SourceA
GateA
MICS10
F1 BL01
C5 CM1uF SMD
C6
C7
C8 100/25 SMD
CM.1uF SMD
100/25 SMD
JP2
CS_PE
CSPE_GND
NTC_GND
NTC
MICS10
R1 10K SMD
R2 10K SMD
R4 10K SMD
R6 10K SMD
JP1
MICS6
C9 CM.1uF SMD
C10 CM1uF SMD
U3 TC4422
GATE_D
R13 22R SMD
D5 BYM13-40 SMD
D6 BYM13-40 SMD
R17 10R-2W
C14 CM1uF
C16 CM1uF
C26 CM1uF SMD
R16 22R SMD
T2
+30Vdc
R21 5R6 SMD
DZ5 16V-1W SMD
DZ6 16V-1W SMD
QC
JP4
GateC
SourceC
GateD
SourceD
C11 CM.1uF SMD
C12 CM1uF SMD
C28 CM1uF SMD
C29 CM1uF SMD
U4 TC4422
GATE_C
R14 22R SMD
D7 BYM13-40 SMD
D8 BYM13-40 SMD
R26 10R-2W
R23 5R6 SMD
DZ7 16V-1W SMD
DZ8 16V-1W SMD
QD
Title
DRIVER PSL4280
Size A3
Document Number CS4280_DRV.DSN
Rev 1
Date: Monday, July 01, 2013
Sheet 1 of 1

PIANO DI MONTAGGIO POWER INPUT PSL4280 R1

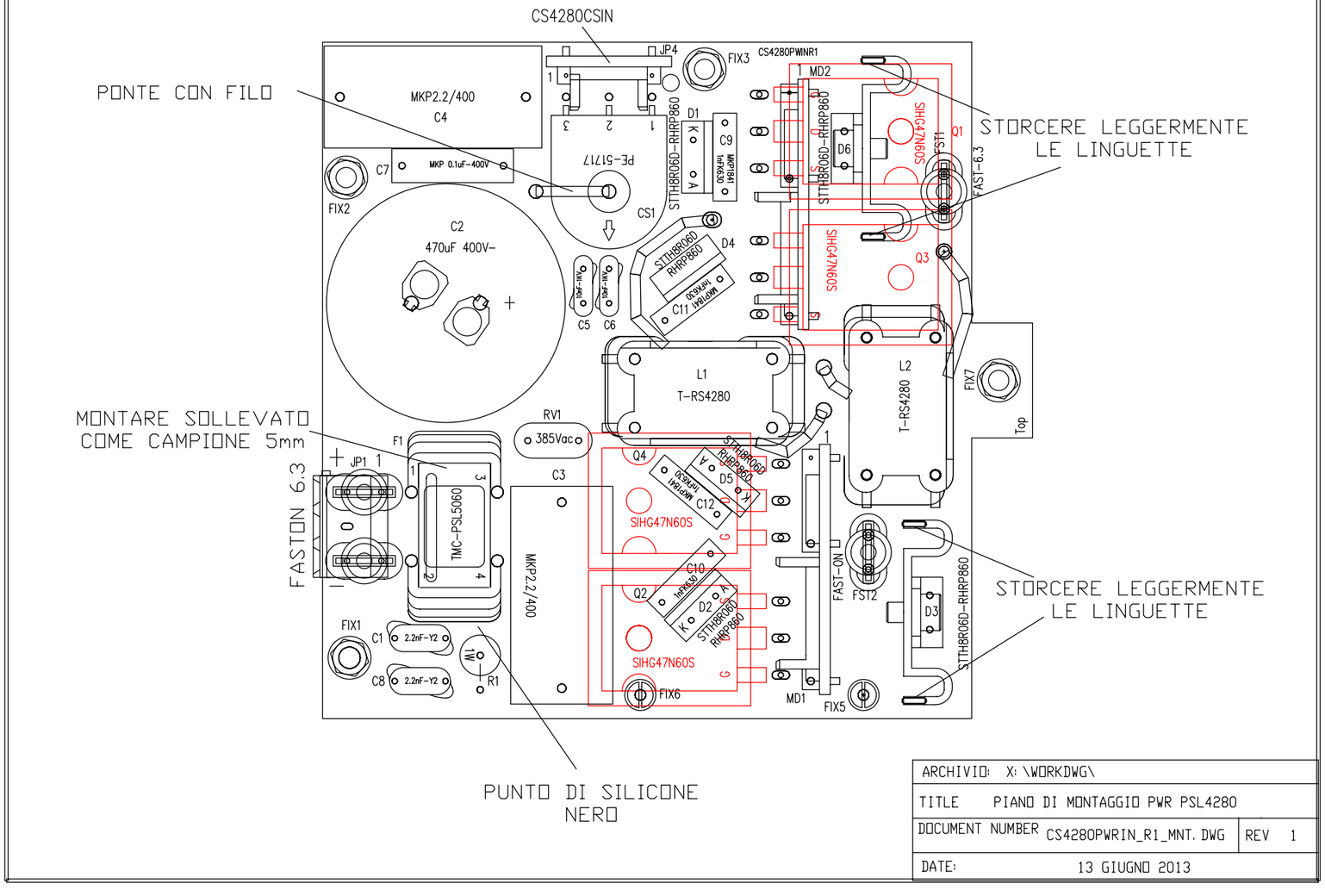

ARCHIVIO:	X:\WORKDWG\
TITLE	PIANO DI MONTAGGIO PWR PSL4280
DOCUMENT NUMBER	CS4280PWRIN_R1_MNT.DWG — REV 1
DATE:	13 GIUGNO 2013

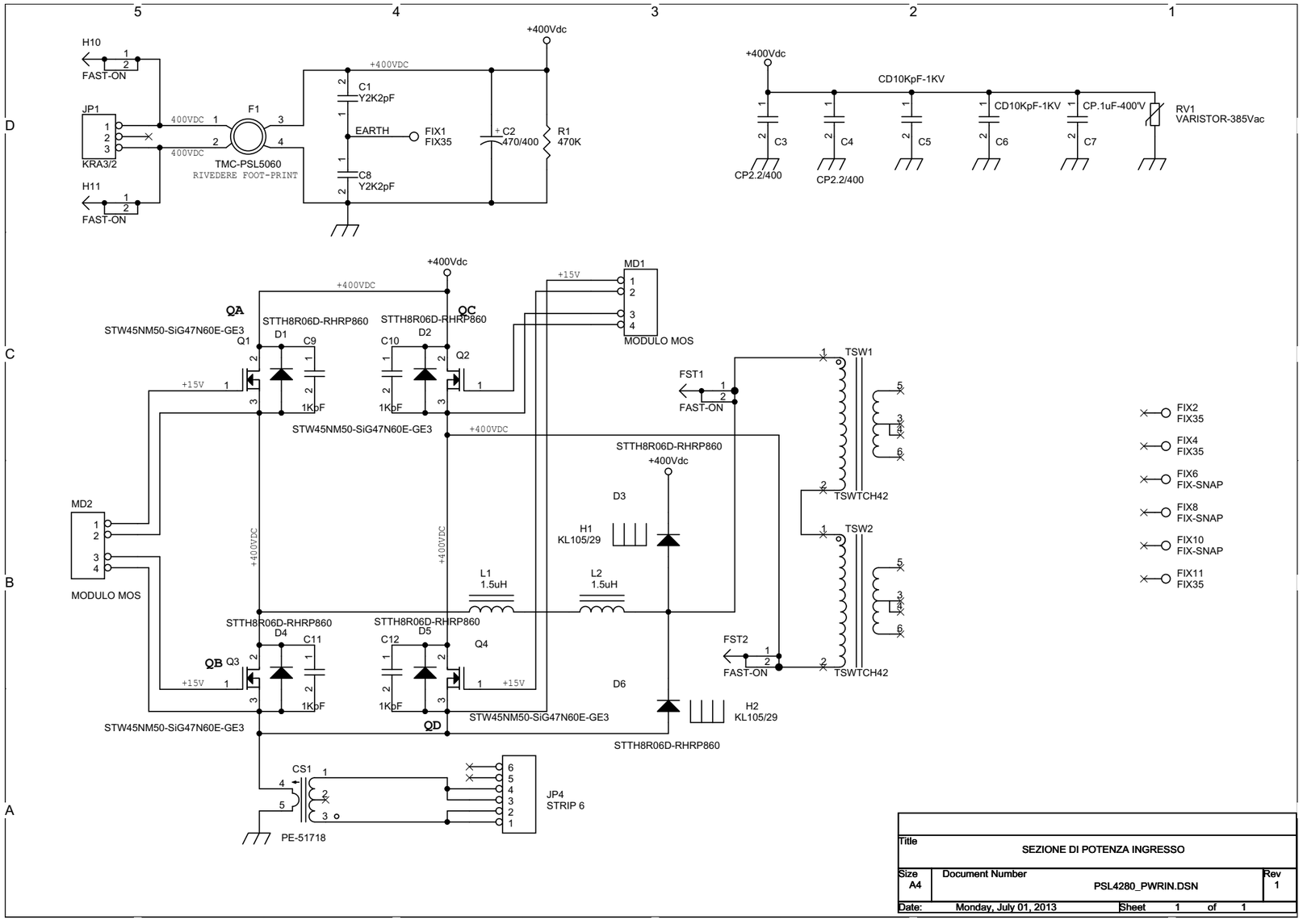

Title	SEZIONE DI POTENZA INGRESSO		
Size A4	Document Number PSL4280_PWRIN.DSN		Rev 1
Date: Monday, July 01, 2013	Sheet 1 of 1		

SEZIONE DI POTENZA INGRESSO Revised: Monday, July 01, 2013
PSL4280_PWRIN.DSN Revision: 1

Item	Quantity	Reference	Part
1	1	CS1	PE-51718
2	2	C1,C8	Y2K2pF
3	1	C2	470/400
4	2	C3,C4	CP2.2/400
5	2	C5,C6	CD10KpF-1KV
6	1	C7	CP.1uF-400'V
7	4	C9,C10,C11,C12	1KpF
8	6	D1,D2,D3,D4,D5,D6	STTH8R06D-RHRP860
9	4	FIX1,FIX2,FIX4,FIX11	FIX35
10	3	FIX6,FIX8,FIX10	FIX-SNAP
11	4	FST1,FST2,H10,H11	FAST-ON
12	1	F1	TMC-PSL5060
13	2	H1,H2	KL105/29
14	1	JP1	KRA3/2
15	1	JP4	STRIP 6
16	2	L1,L2	1.5uH
17	2	MD1,MD2	MODULO MOS
18	4	Q1,Q2,Q3,Q4	STW45NM50-SiG47N60E-GE3
19	1	RV1	VARISTOR-385Vac
20	1	R1	470K
21	2	TSW1,TSW2	TSWTCH42

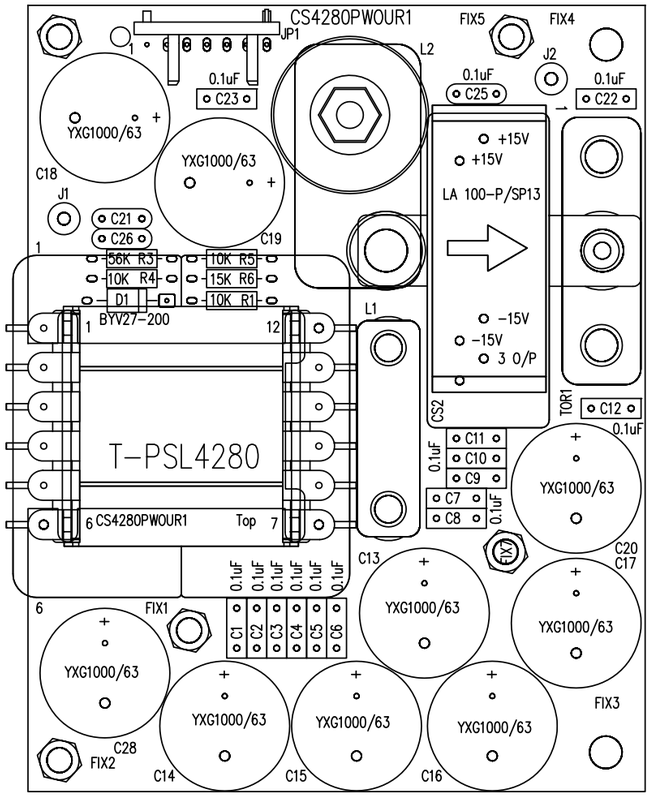

SEZIONE DI POTENZA INGRESSO Revised: Monday, July 01, 2013
PSL4280_PWRIN.DSN Revision: 1

Item	Quantity	Reference	Part
1	1	CS1	PE-51718
2	2	C1,C8	Y2K2pF
3	1	C2	470/400
4	2	C3,C4	CP2.2/400
5	2	C5,C6	CD10KpF-1KV
6	1	C7	CP.1uF-400'V
7	4	C9,C10,C11,C12	1KpF
8	6	D1,D2,D3,D4,D5,D6	STTH8R06D-RHRP860
9	4	FIX1,FIX2,FIX4,FIX11	FIX35
10	3	FIX6,FIX8,FIX10	FIX-SNAP
11	4	FST1,FST2,H10,H11	FAST-ON
12	1	F1	TMC-PSL5060
13	2	H1,H2	KL105/29
14	1	JP1	KRA3/2
15	1	JP4	STRIP 6
16	2	L1,L2	1.5uH
17	2	MD1,MD2	MODULO MOS
18	4	Q1,Q2,Q3,Q4	STW45NM50-SiG47N60E-GE3
19	1	RV1	VARISTOR-385Vac
20	1	R1	470K
21	2	TSW1,TSW2	TSWTCH42

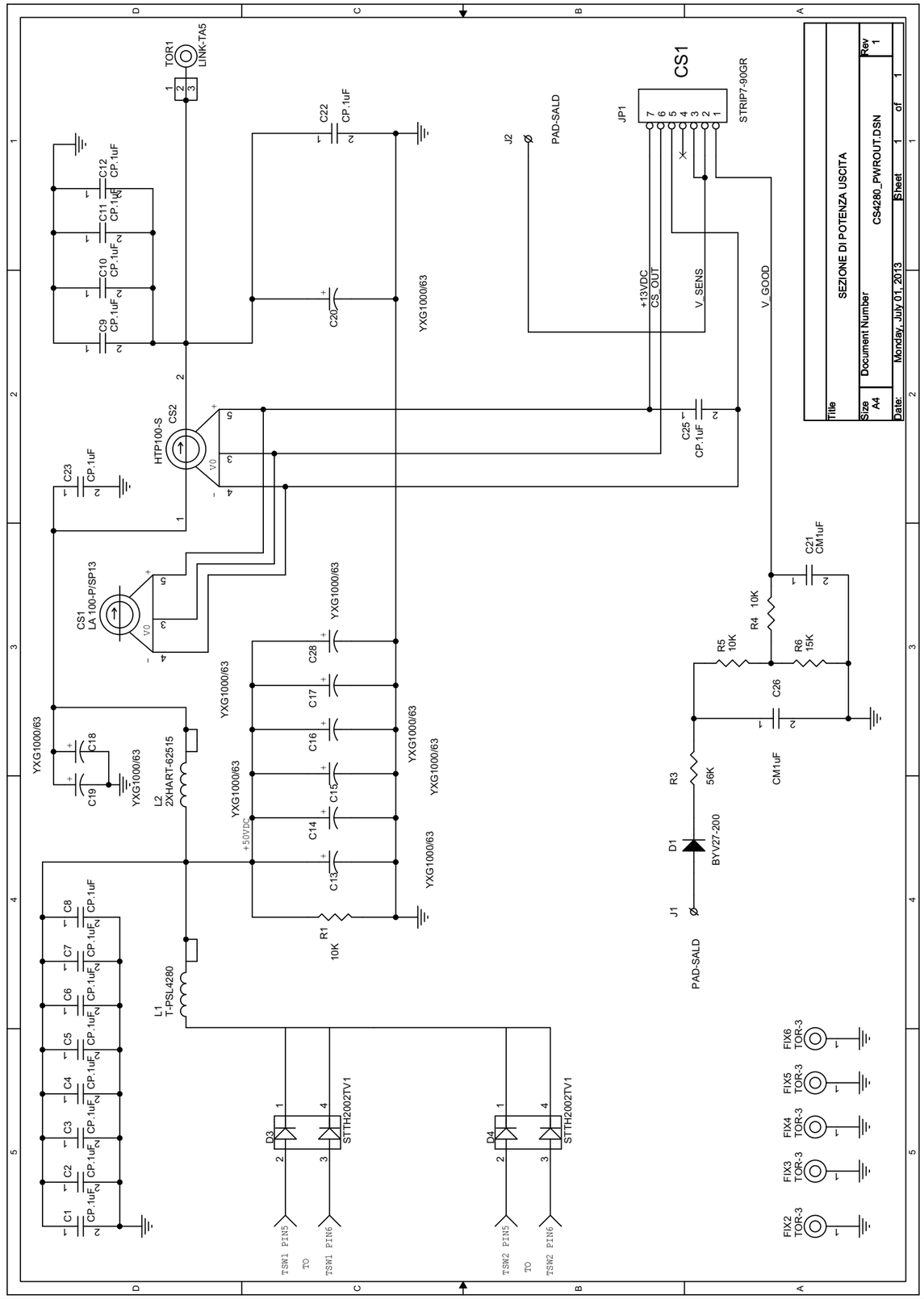

CONNECT TA NTC INPUT Revised: Monday, June 1
CSPSL4280_TA.DSN Revision: 1

Bill Of Materials June 27,2013

Item	Quantity	Reference	Part
1	1	C2	CM.1uF
2	1	D1	BYV27-200
3	1	JP1	MICS6
4	1	JP2	STRIP-6 90GR
5	1	J1	JUMP 2P
6	1	R1	27R-2W
7	1	R2	330R-1/4W
8	1	R3	470R
9	1	R4	560R-1/4W

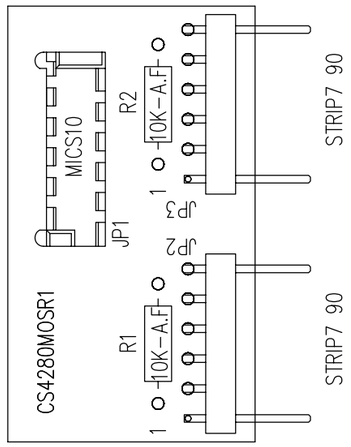

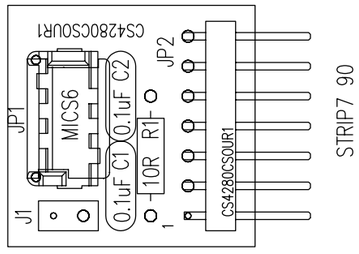

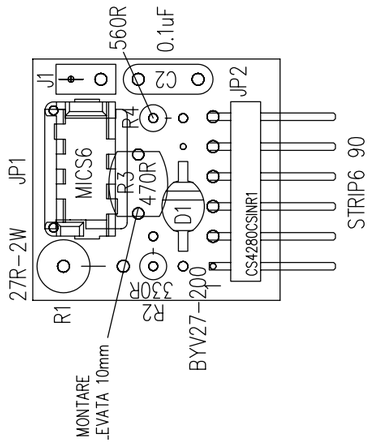

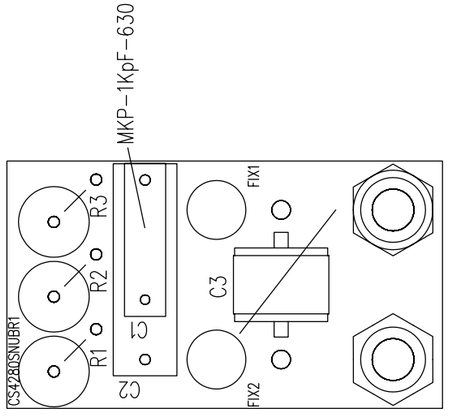

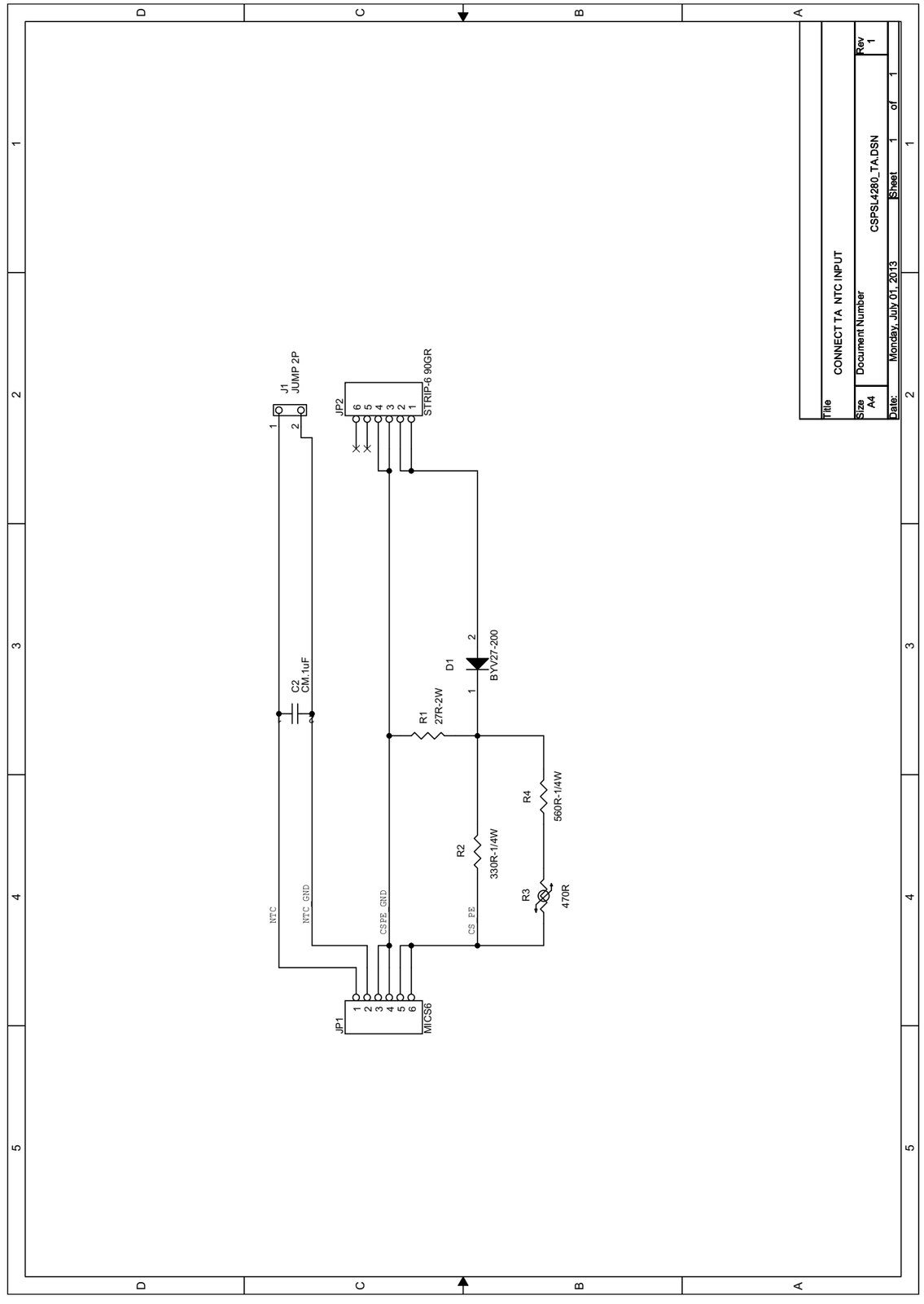

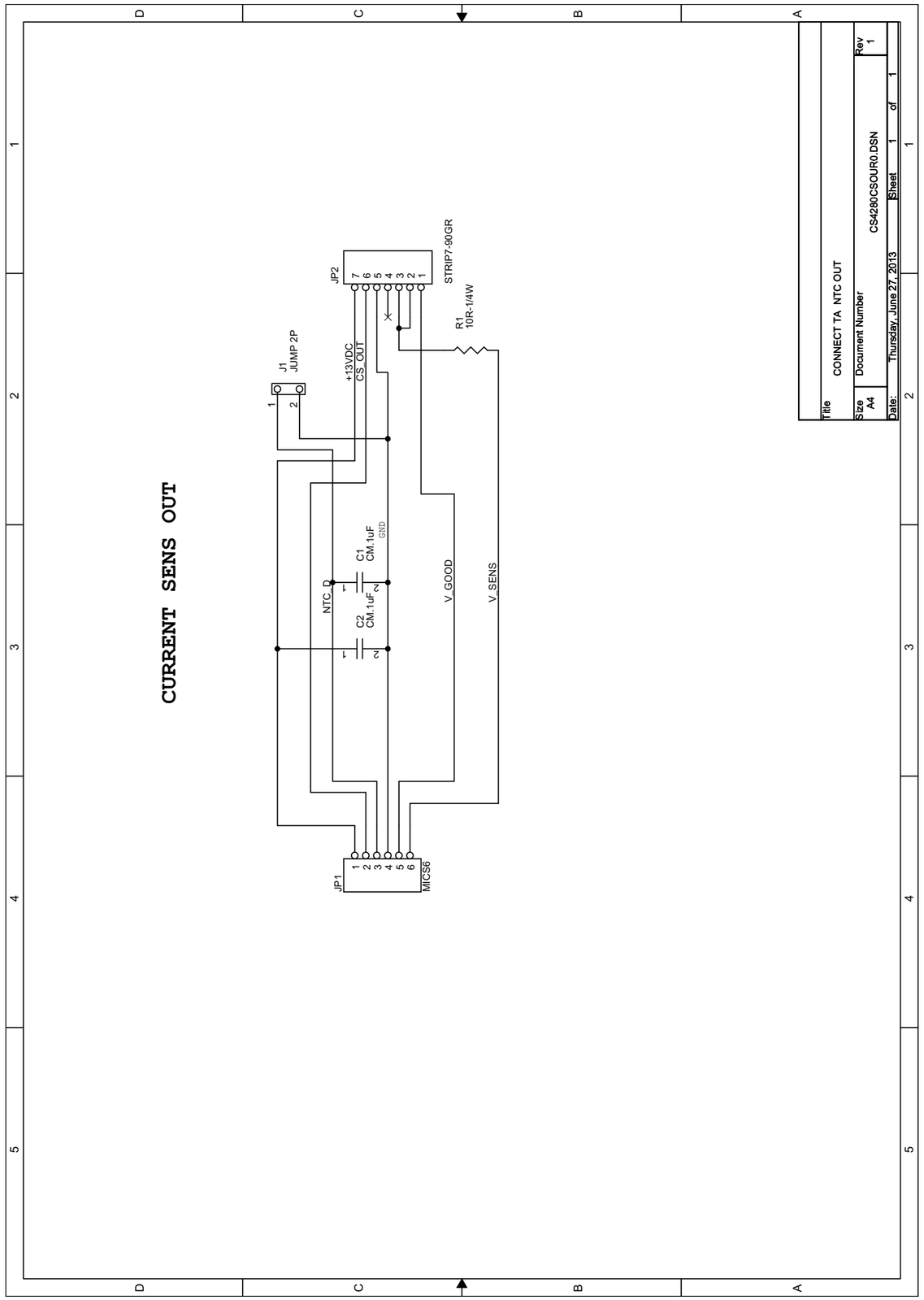

CONNECT TA NTC OUT Revised: Monday, June 10, 2013
CS4280CSOUR0.DSN Revision: 1

Bill Of Materials June 27,2013 7:58:00 Page1

Item	Quantity	Reference	Part
1	2	C1	CM.1uF
		C2	CM.1uF
2	1	JP1	MICS6
3	1	JP2	STRIP7-90GR
4	1	J1	JUMP 2P
5	1	R1	10R-1/4W

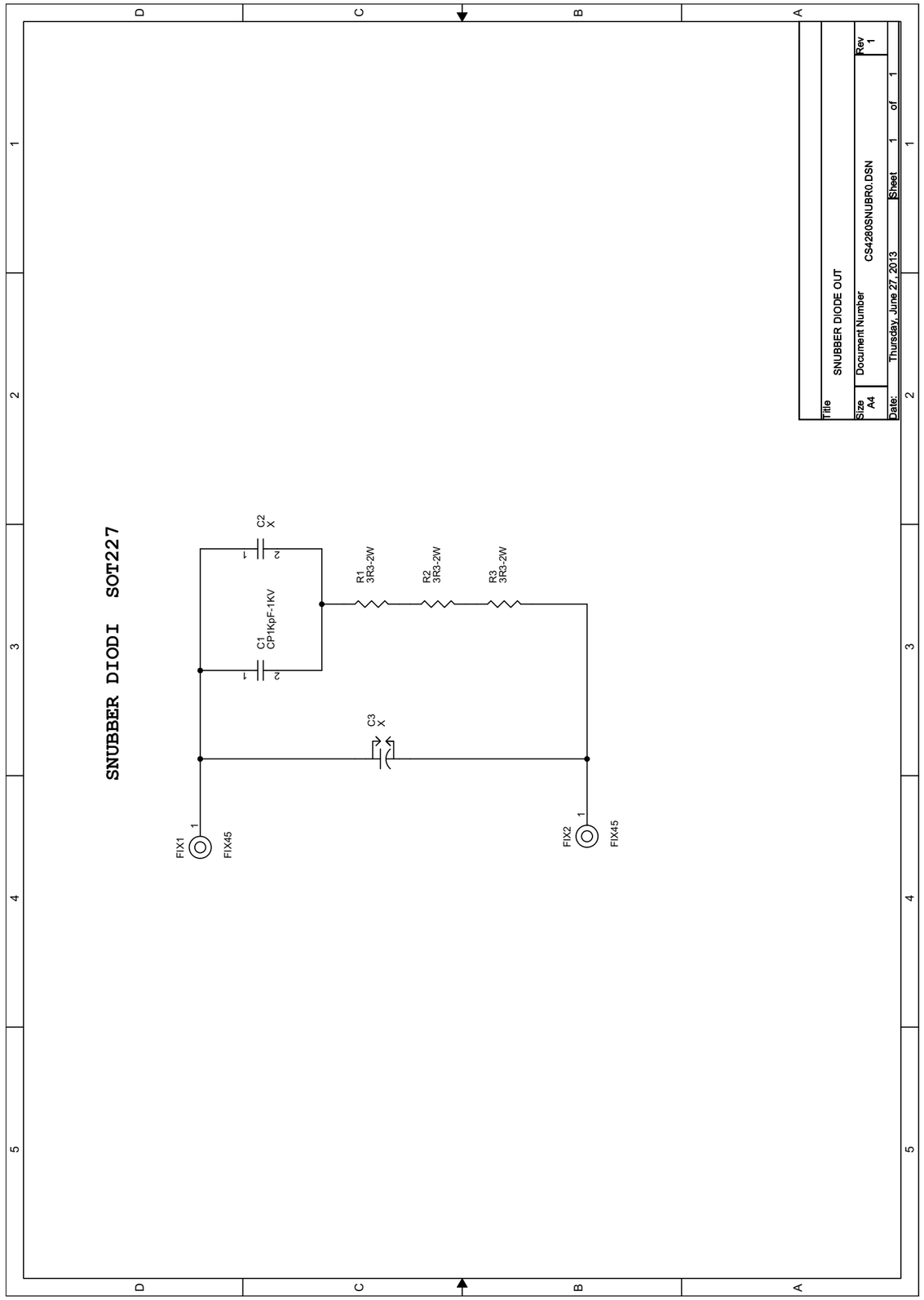

SNUBBER DIODE OUT Revised: Monday, June 10, 2013
CS4280SNUBR0.DSN Revision: 1

Bill Of Materials June 27,2013 7:59:07 Page1

Item	Quantity	Reference	Part
1	1	C1	CP1KpF-1KV
2	2	C2	X
		C3	X
3	2	FIX1	FIX45
		FIX2	FIX45
4	3	R1	3R3-2W
		R2	3R3-2W
		R3	3R3-2W

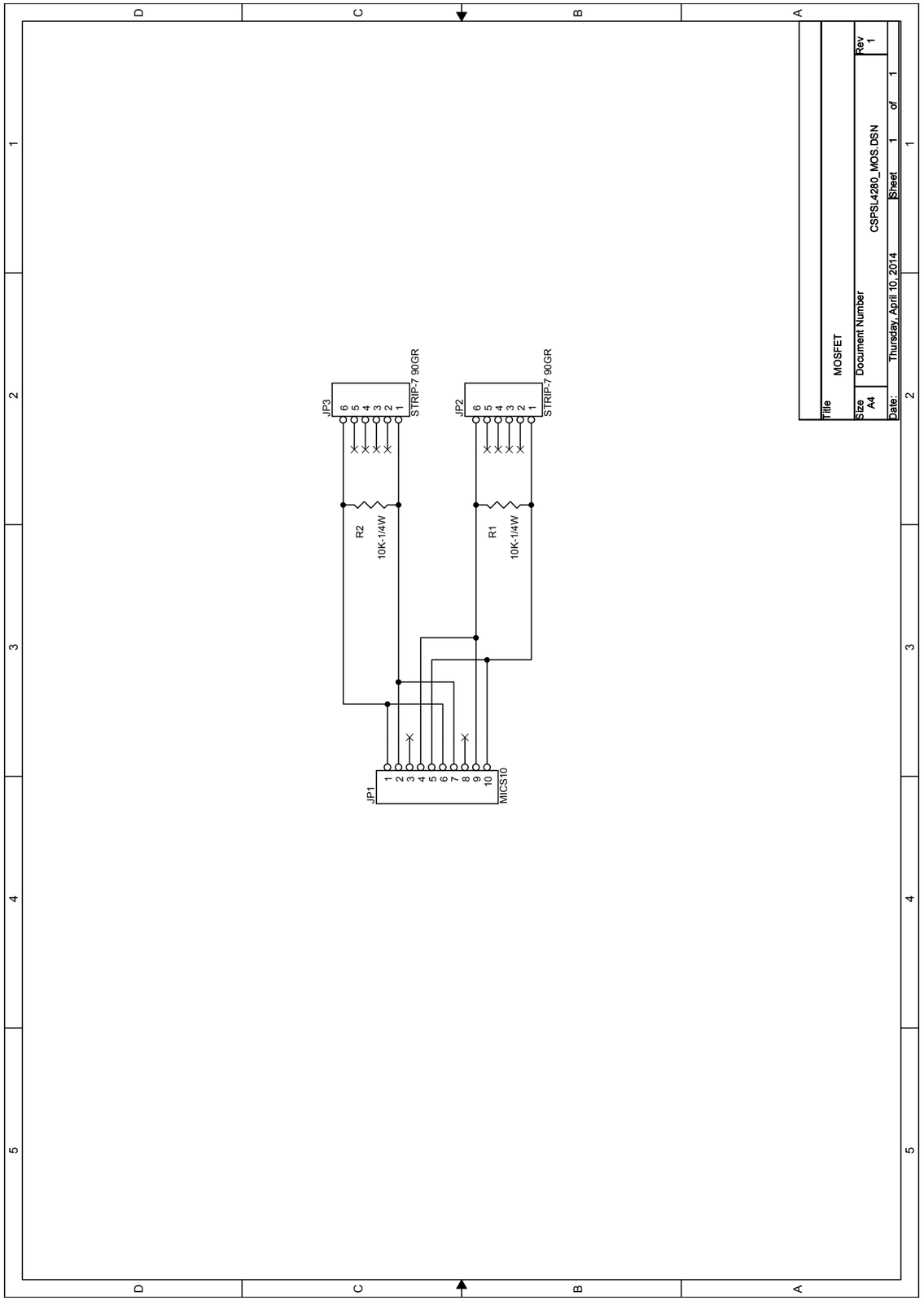

MOSFET Revised: Thursday, April 10, 2014
CSPSL4280_MOS.DSN Revision: 1

Bill Of Materials Page1

Item	Quantity	Reference	Part
1	1	JP1	MICS10
2	2	JP2,JP3	STRIP-7 90GR
3	2	R1,R2	10K-1/4W

8.10 Surge protection board (SL046SR1002)

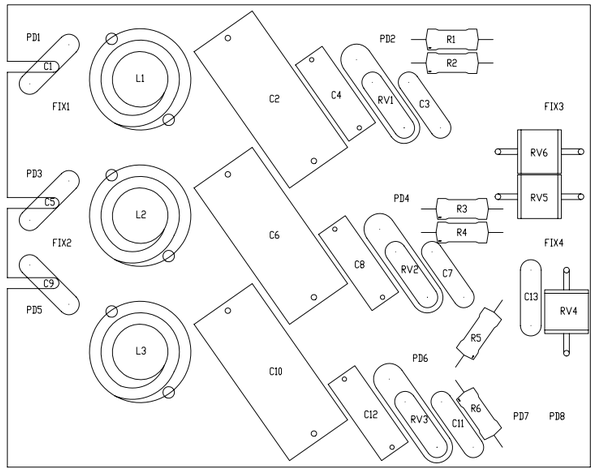

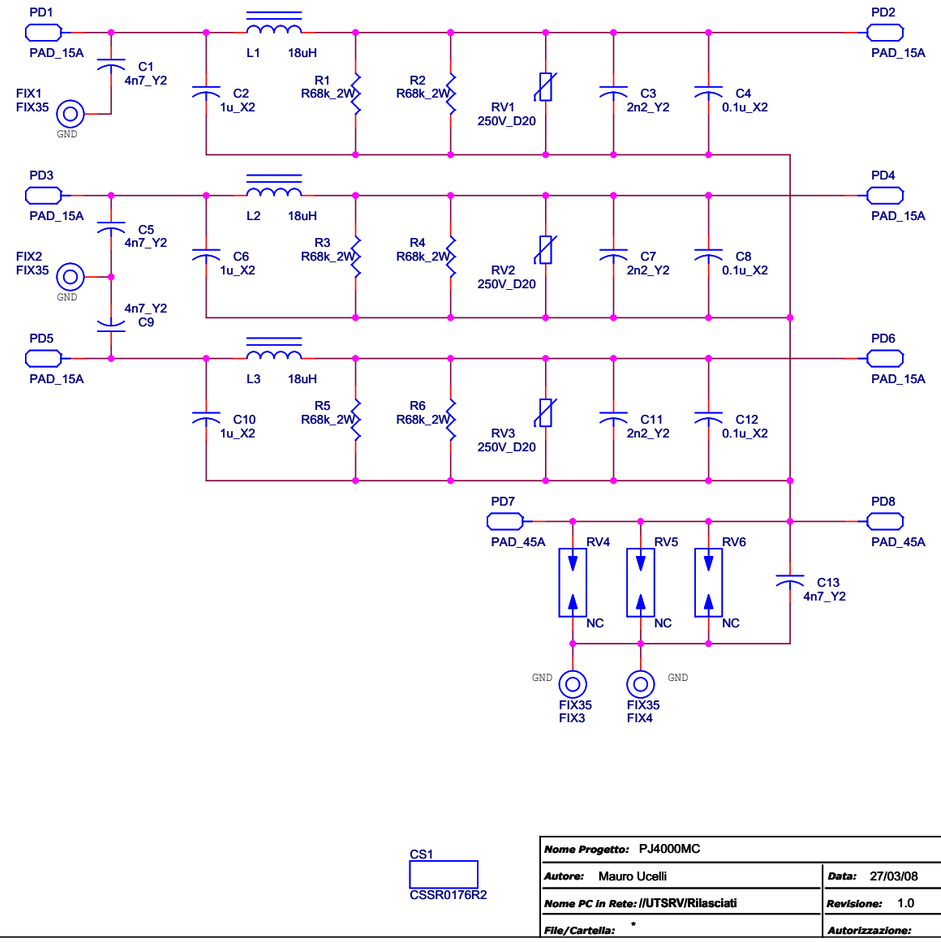

Mains filter
SL046SR1002
Revision: 1.0
Mauro Ucelli
27/03/08

Item	Quantity	Reference	Part	Description	Code1
1	1	CS1	CSSR0176R2		CSSR0176R2
2	4	C1,C5,C9,C13	4n7_Y2	Condensatore tipo Y2	CCY472MD250
3	3	C2,C6,C10	1u_X2	Condensatore tipo X2	CPP105MN271
4	3	C3,C7,C11	2n2_Y2	Condensatore tipo Y2	CCY222MD251
5	3	C4,C8,C12	0.1u_X2	Condensatore tipo X2	CPP104MG271
6	4	FIX1,FIX2,FIX3,FIX4	FIX35		
7	3	L1,L2,L3	18uH	Induttanza su cilindro di ferrite	BOB02010004A
8	6	PD1,PD2,PD3,PD4,PD5,PD6	PAD_15A		
9	2	PD7,PD8	PAD_45A		
10	3	RV1,RV2,RV3	250V_D20	Varistore a pastiglia diametro 20mm	MOV250V40
11	3	RV4,RV5,RV6	NC	Surge Arrester	
12	6	R1,R2,R3,R4,R5,R6	R68k_2W	Resistenza 2W	RSM002J0068K

8.11 PS-RF interface board (SLINPSP2K07)

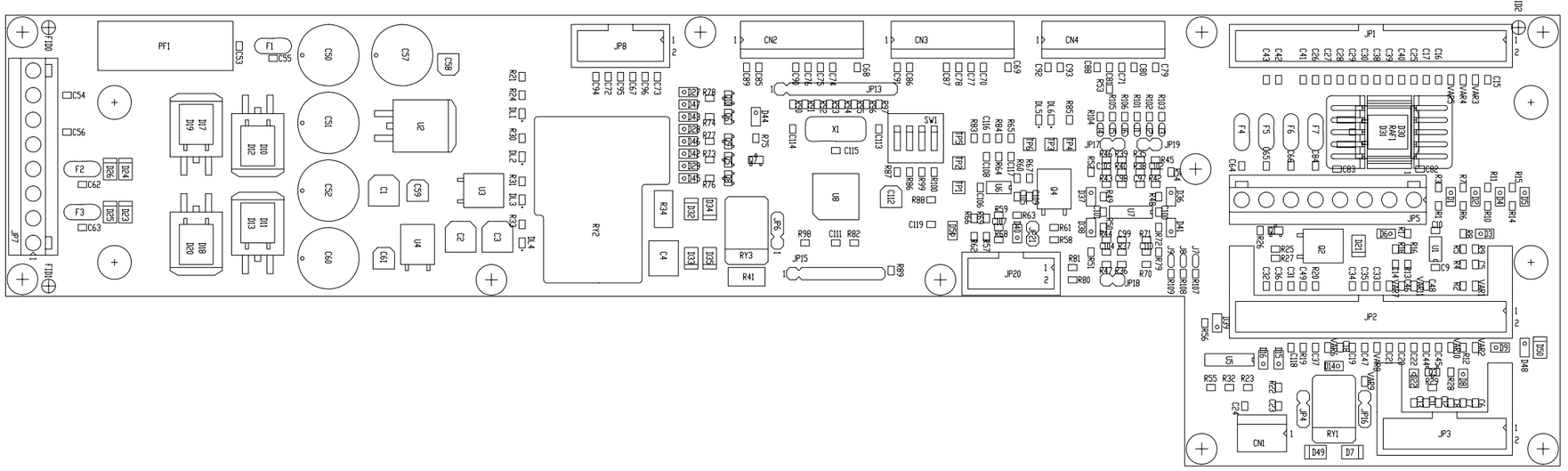

R.V.R. ELETTRONICA	NOME PROGETTO: PJ4000M-C			NOME PARTE: SCHEDA INTERFACCIA PS-RF		
	AUTORE: M. UCELLI		DATA: 15/05/2007	REVISIONE: 1.0	SCALA: 1:1	SIZE: A3	PAGINA: 1 DI 1
ARCHIVIAZIONE ELETTRONICA: "CARTELLA RILASCIATI" SU "UTSRV"		CODICE PROGETTO: 046		CODICE DISEGNO: SLINPSPJ2K07		
MATERIALE: <>		TRATTAMENTO: <>		PROFILO: <>		STATO: ESECUTIVO

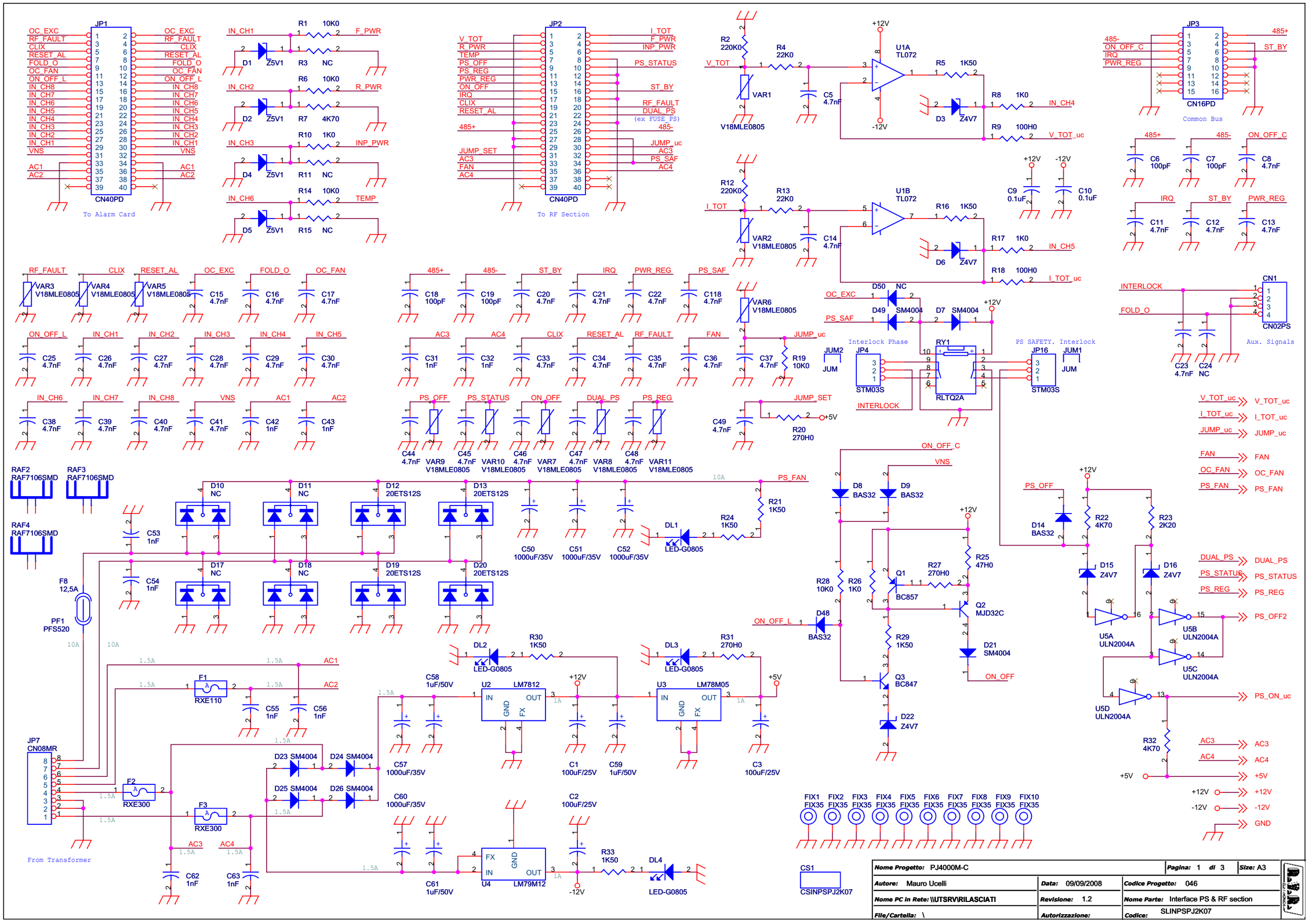
JP1
CN40PD
To Alarm Card
JP2
CN40PD
To RF Section
JP3
CN16PD
Common Bus
CN1
CN02PS
Aux. Signals
JP7
CN08MR
From Transformer
U1A TL072
U1B TL072
U2 LM7812
U3 LM78M05
U4 LM79M12
U5A ULN2004A
U5B ULN2004A
U5C ULN2004A
U5D ULN2004A
RY1 RLTQ2A
JP4 STM03S
JP16 STM03S
CS1 CSINPSPJ2K07
Interlock Phase
PS SAFETY. Interlock
Nome Progetto: PJ4000M-C
Pagina: 1 di 3
Size: A3
Autore: Mauro Ucelli
Data: 09/09/2008
Codice Progetto: 046
Nome PC in Rete: \\UTSRV\RILASCIATI
Revisione: 1.2
Nome Parte: Interface PS & RF section
File/Cartella: \
Autorizzazione:
Codice: SLINPSPJ2K07

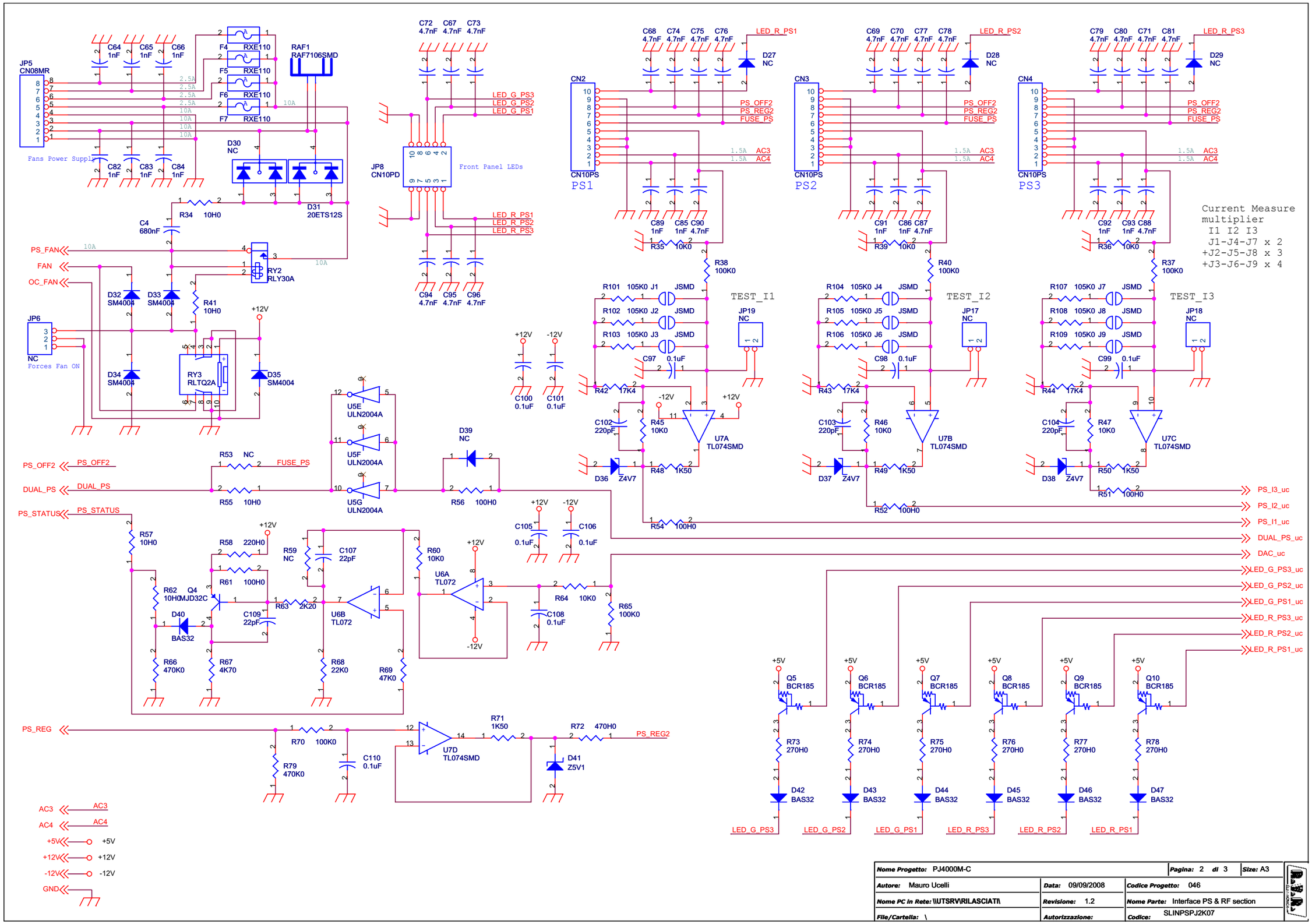
JP5 CN08MR
Fans Power Supply
F4 RXE110
F5 RXE110
F6 RXE110
F7 RXE110
RAF1 RAF7106SMD
D30 NC
D31 20ETS12S
R34 10H0
C4 680nF
RY2 RLY30A
PS_FAN
FAN
OC_FAN
D32 SM4004
D33 SM4004
D34 SM4004
D35 SM4004
R41 10H0
JP6
NC
Forces Fan ON
RY3 RLTQ2A
+12V
JP8 CN10PD
Front Panel LEDs
LED_G_PS3
LED_G_PS2
LED_G_PS1
LED_R_PS1
LED_R_PS2
LED_R_PS3
CN2 CN10PS PS1
CN3 CN10PS PS2
CN4 CN10PS PS3
PS_OFF2
PS_REG2
FUSE_PS
1.5A AC3
1.5A AC4
LED_R_PS1
LED_R_PS2
LED_R_PS3
D27 NC
D28 NC
D29 NC
R35 10K0
R39 10K0
R36 10K0
R38 100K0
R40 100K0
R37 100K0
TEST_I1
TEST_I2
TEST_I3
JP19 NC
JP17 NC
JP18 NC
R101 105K0 J1 JSMD
R102 105K0 J2 JSMD
R103 105K0 J3 JSMD
R104 105K0 J4 JSMD
R105 105K0 J5 JSMD
R106 105K0 J6 JSMD
R107 105K0 J7 JSMD
R108 105K0 J8 JSMD
R109 105K0 J9 JSMD
C97 0.1uF
C98 0.1uF
C99 0.1uF
R42 17K4
R43 17K4
R44 17K4
C102 220pF
C103 220pF
C104 220pF
R45 10K0
R46 10K0
R47 10K0
U7A TL074SMD
U7B TL074SMD
U7C TL074SMD
D36 Z4V7
D37 Z4V7
D38 Z4V7
R48 1K50
R49 1K50
R50 1K50
R51 100H0
R52 100H0
R54 100H0
PS_I3_uc
PS_I2_uc
PS_I1_uc
DUAL_PS_uc
DAC_uc
LED_G_PS3_uc
LED_G_PS2_uc
LED_G_PS1_uc
LED_R_PS3_uc
LED_R_PS2_uc
LED_R_PS1_uc
Current Measure multiplier
I1 I2 I3
J1-J4-J7 x 2
+J2-J5-J8 x 3
+J3-J6-J9 x 4
C72 C67 C73 4.7nF
C94 C95 C96 4.7nF
C68 C74 C75 C76 4.7nF
C69 C70 C77 C78 4.7nF
C79 C80 C71 C81 4.7nF
C64 C65 C66 1nF
C82 C83 C84 1nF
C89 C85 C90 1nF 1nF 4.7nF
C91 C86 C87 1nF 1nF 4.7nF
C92 C93 C88 1nF 1nF 4.7nF
C100 0.1uF
C101 0.1uF
U5E ULN2004A
U5F ULN2004A
U5G ULN2004A
D39 NC
R56 100H0
R53 NC
R55 10H0
PS_OFF2
DUAL_PS
PS_STATUS
R57 10H0
R58 220H0
R59 NC
R61 100H0
R62 10H0
Q4 MJD32C
D40 BAS32
R63 2K20
C107 22pF
C109 22pF
U6B TL072
R60 10K0
U6A TL072
C105 0.1uF
C106 0.1uF
C108 0.1uF
R64 10K0
R65 100K0
R66 470K0
R67 4K70
R68 22K0
R69 47K0
PS_REG
R70 100K0
C110 0.1uF
R79 470K0
U7D TL074SMD
R71 1K50
R72 470H0
D41 Z5V1
AC3
AC4
+5V
+12V
-12V
GND
Q5 BCR185
Q6 BCR185
Q7 BCR185
Q8 BCR185
Q9 BCR185
Q10 BCR185
R73 270H0
R74 270H0
R75 270H0
R76 270H0
R77 270H0
R78 270H0
D42 BAS32
D43 BAS32
D44 BAS32
D45 BAS32
D46 BAS32
D47 BAS32
Nome Progetto: PJ4000M-C
Pagina: 2 di 3
Size: A3
Autore: Mauro Ucelli
Data: 09/09/2008
Codice Progetto: 046
Nome PC in Rete: \\UTSRV\RILASCIATI\
Revisione: 1.2
Nome Parte: Interface PS & RF section
File/Cartella: \
Autorizzazione:
Codice: SLINPSPJ2K07

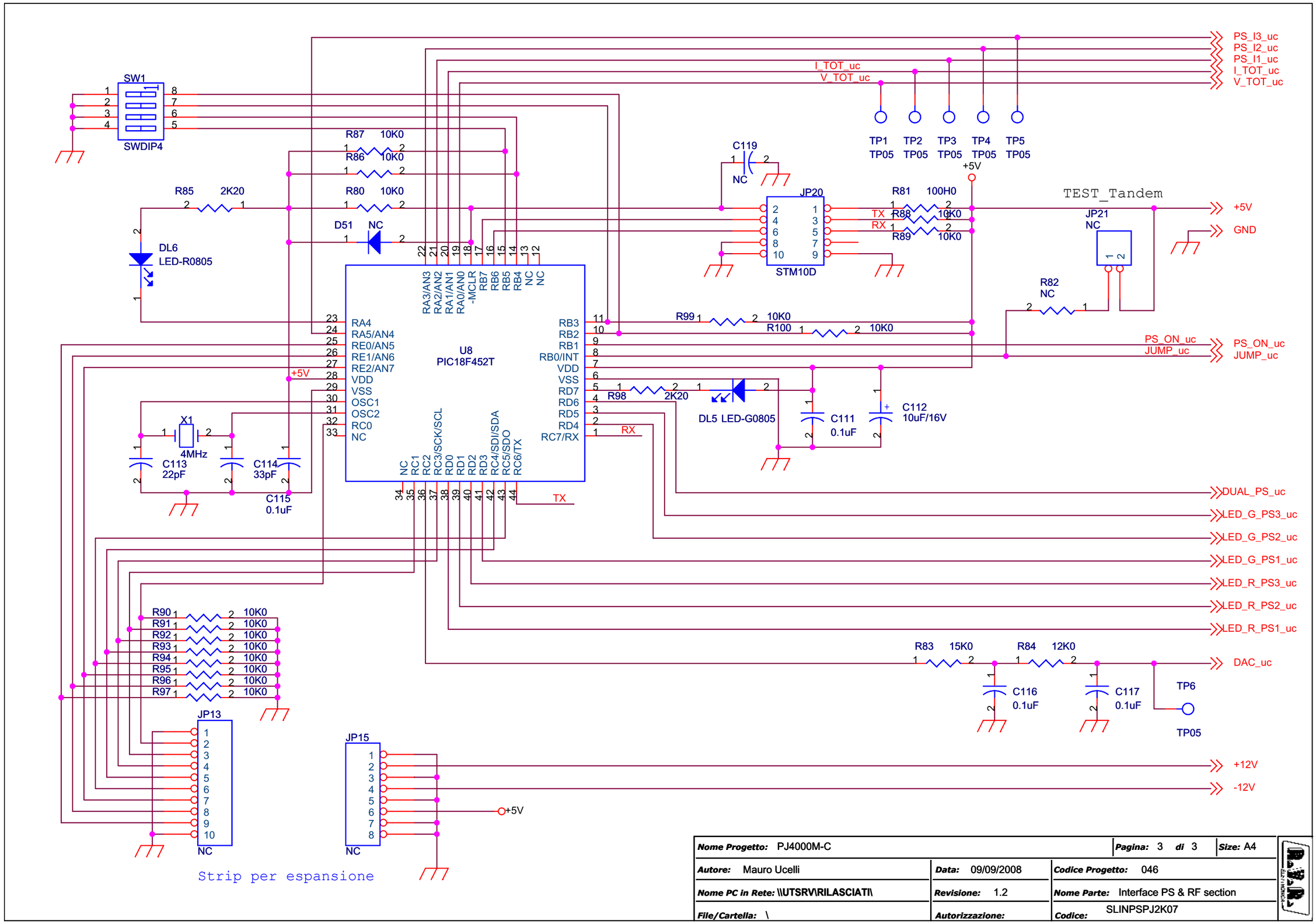

Nome Progetto: PJ4000M-C		**Pagina:** 3 **di** 3	**Size:** A4
Autore: Mauro Ucelli	**Data:** 09/09/2008	**Codice Progetto:** 046	
Nome PC in Rete: \\UTSRV\RILASCIATI\	**Revisione:** 1.2	**Nome Parte:** Interface PS & RF section	
File/Cartella: \	**Autorizzazione:**	**Codice:** SLINPSPJ2K07	

Interface PS & RF section Revised: 09/09/2008
SLINPSPJ2K07 Revision: 1.2
PJ4000M-C
046
Mauro Ucelli
09/09/08

Item	Quantity	Reference	Part	Description
1	1	CN1	CN02PS	Connettore 2 poli Mascon p 2.5mm
2	3	CN2,CN3,CN4	CN10PS	Connettore 10 poli Mascon
3	1	CS1	CSINPSPJ2K07	Circuito stampato
4	3	C1,C2,C3	100uF/25V	Cond. Elett. SMD d. 6.3mm
5	1	C4	680nF	Cond. SMD 2824
6	56	C5,C8,C11,C12,C13,C14, C15,C16,C17,C20,C21,C22, C23,C25,C26,C27,C28,C29, C30,C33,C34,C35,C36,C37, C38,C39,C40,C41,C44,C45, C46,C47,C48,C49,C67,C68, C69,C70,C71,C72,C73,C74, C75,C76,C77,C78,C79,C80, C81,C87,C88,C90,C94,C95, C96,C118	4.7nF	Cond. SMD 0805
7	4	C6,C7,C18,C19	100pF	Cond. SMD 0805 COG
8	15	C9,C10,C97,C98,C99,C100, C101,C105,C106,C108,C110, C111,C115,C116,C117	0.1uF	Cond. SMD 0805
9	2	C24,C119	NC	Cond. SMD 0805
10	22	C31,C32,C42,C43,C53,C54, C55,C56,C62,C63,C64,C65, C66,C82,C83,C84,C85,C86, C89,C91,C92,C93	1nF	Cond. SMD 0805 COG
11	5	C50,C51,C52,C57,C60	1000uF/35V	Cond. Elettr. Dia 13 P5.08
12	3	C58,C59,C61	1uF/50V	Cond. Elett. SMD d. 4mm
13	3	C102,C103,C104	220pF	Cond. SMD 0805 COG
14	3	C107,C109,C113	22pF	Cond. SMD 0805 COG
15	1	C112	10uF/16V	Cond. Elett. SMD d. 4mm
16	1	C114	33pF	Cond. SMD 0805 COG
17	5	DL1,DL2,DL3,DL4,DL5	LED-G0805	LED SMD 0805
18	1	DL6	LED-R0805	LED SMD 0805
19	5	D1,D2,D4,D5,D41	Z5V1	MINIMELF SMD Zener Diode
20	8	D3,D6,D15,D16,D22,D36, D37,D38	Z4V7	MINIMELF SMD Zener Diode
21	11	D7,D21,D23,D24,D25,D26, D32,D33,D34,D35,D49	SM4004	Diodo SMD cont. SMA
22	11	D8,D9,D14,D40,D42,D43, D44,D45,D46,D47,D48	BAS32	MINIMELF SMD Diode
23	5	D10,D11,D17,D18,D30	NC	Doppio diodo shottky SMD
24	5	D12,D13,D19,D20,D31	20ETS12S	Doppio diodo shottky DMS D2PAK
25	5	D27,D28,D29,D39,D51	NC	MINIMELF SMD Diode
26	1	D50	NC	Diodo SMD cont. SMA
27	10	FIX1,FIX2,FIX3,FIX4,FIX5, FIX6,FIX7,FIX8,FIX9, FIX10	FIX35	Foro fissaggio 3.5mm
28	5	F1,F4,F5,F6,F7	RXE110	Fusibile autorip. RXE p5mm
28A	2	F2,F3	RXE300	Fusibile autorip. RXE p5mm
29	1	F8	12,5A	Fusibile rapido 5x20mm
30	2	JP1,JP2	CN40PD	Conn. flat 40 poli
31	1	JP3	CN16PD	Connettore 16 poli Flat cs
32	2	JP4,JP16	STM03S	Strip maschio 3 pin
33	2	JP5,JP7	CN08MR	Conn. Phoenix p. 5mm 8 pin
34	1	JP6	NC	Strip maschio 3 pin
35	1	JP8	CN10PD	Connettore 10 poli Flat cs
36	1	JP13	NC	Strip femmina 10 pin
37	1	JP15	NC	Strip femmina 8 pin
38	4	JP17,JP18,JP19,JP21	NC	Strip maschio 2 pin
39	1	JP20	STM10D	Connettore 10 poli Flat cs
40	2	JUM1,JUM2	JUM	Ponticello jumper
41	9	J1,J2,J3,J4,J5,J6,J7,J8, J9	JSMD	Pad SMD a saldare
42	1	PF1	PFS520	Portafusibile 5x20 10A
43	1	Q1	BC857	Trans. PNP SOT23
44	2	Q2,Q4	MJD32C	Trans. PNP DPAK
45	1	Q3	BC847	Trans. NPN SOT23
46	6	Q5,Q6,Q7,Q8,Q9,Q10	BCR185	Trans./Res. PNP SOT23
47	4	RAF1,RAF2,RAF3,RAF4	RAF7106SMD	Dissipatore SMD Mod. 7106
48	2	RY1,RY3	RLTQ2A	Rele' TQ2
49	1	RY2	RLY30A	Rele' 30A NO
50	28	R1,R6,R14,R19,R28,R35, R36,R39,R45,R46,R47,R60, R64,R80,R86,R87,R88,R89, R90,R91,R92,R93,R94,R95, R96,R97,R99,R100	10K0	Res. SMD 0805
51	2	R2,R12	220K0	Res. SMD 0805
52	6	R3,R11,R15,R53,R59,R82	NC	Res. SMD 0805
53	3	R4,R13,R68	22K0	Res. SMD 0805
54	11	R5,R16,R21,R24,R29,R30, R33,R48,R49,R50,R71	1K50	Res. SMD 0805
55	4	R7,R22,R32,R67	4K70	Res. SMD 0805
56	4	R8,R10,R17,R26	1K0	Res. SMD 0805
57	8	R9,R18,R51,R52,R54,R56, R61,R81	100H0	Res. SMD 0805
58	9	R20,R27,R31,R73,R74,R75, R76,R77,R78	270H0	Res. SMD 0805
59	4	R23,R63,R85,R98	2K20	Res. SMD 0805
60	1	R25	47H0	Res. SMD 0805
61	2	R34,R41	10H0	Res. SMD 2512 5%
62	5	R37,R38,R40,R65,R70	100K0	Res. SMD 0805
63	3	R42,R43,R44	17K4	Res. SMD 0805
64	3	R55,R57,R62	10H0	Res. SMD 0805
65	1	R58	220H0	Res. SMD 0805
66	2	R66,R79	470K0	Res. SMD 0805
67	1	R69	47K0	Res. SMD 0805
68	1	R72	470H0	Res. SMD 0805
69	1	R83	15K0	Res. SMD 0805
70	1	R84	12K0	Res. SMD 0805
71	9	R101,R102,R103,R104,R105, R106,R107,R108,R109	105K0	Res. SMD 0805
72	1	SW1	SWDIP4	Dip switch 4 vie
73	6	TP1,TP2,TP3,TP4,TP5,TP6	NC	Test point
74	2	U1,U6	TL072	Dual Op. SMD SO8
75	1	U2	LM7812	Stabilizzatore SMD D2PAK
76	1	U3	LM78M05	Stabilizzatore SMD DPAK
77	1	U4	LM79M12	Stabilizzatore SMD DPAK
78	1	U5	ULN2004A	Seven Inv. Buffer OC
79	1	U7	TL074SMD	Quad Op. SMD SO14
80	1	U8	PIC18F452T	TQFP44 SMD Microprocessor
81	11	VAR1,VAR2,VAR3,VAR4,VAR5, VAR6,VAR7,VAR8,VAR9, VAR10,VAR11	V18MLE0805	ESD SMD protector
82	1	X1	4MHz	Quarzo SMD HC49SMD

8.11.1 Board settings

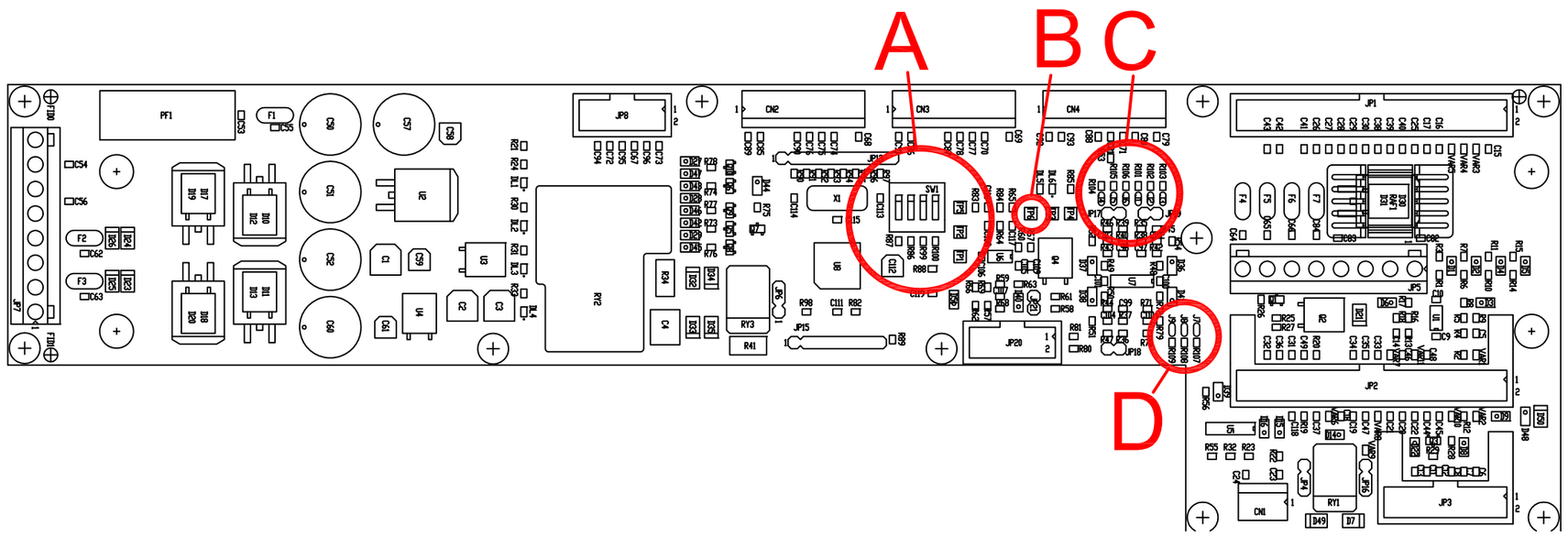

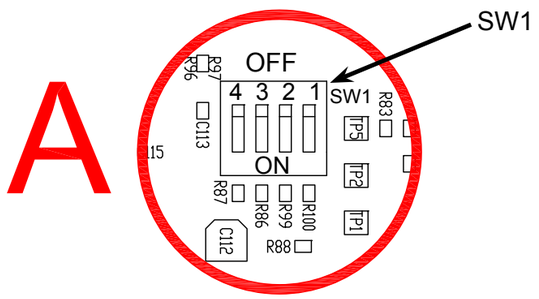

Set the switches as follows:

SW	ON	OFF
1		X
2	X	
3		X
4		X

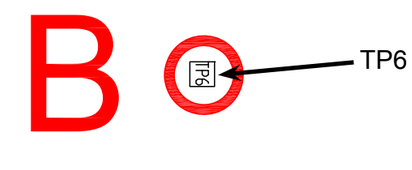

By making a bridge with a cable between TP6 and GROUND is inhibited the operation of this board

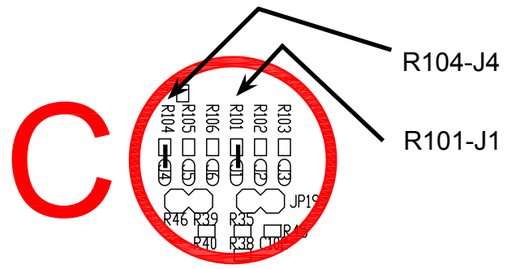

Make the following jumpers with a drop of tin:
R104-J4
R101-J1

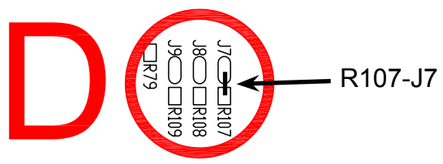

Make the following jumper with a drop of tin:
R107-J7

8.12 LED board (SL154LD1001)

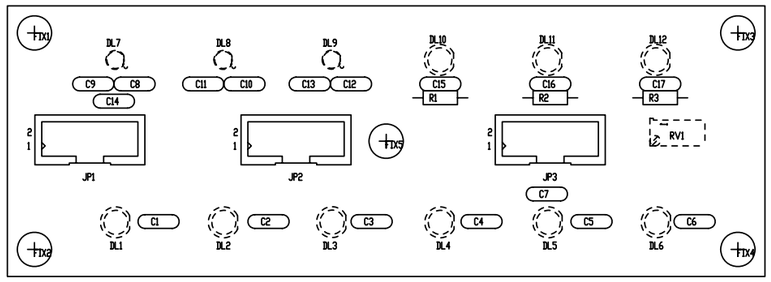

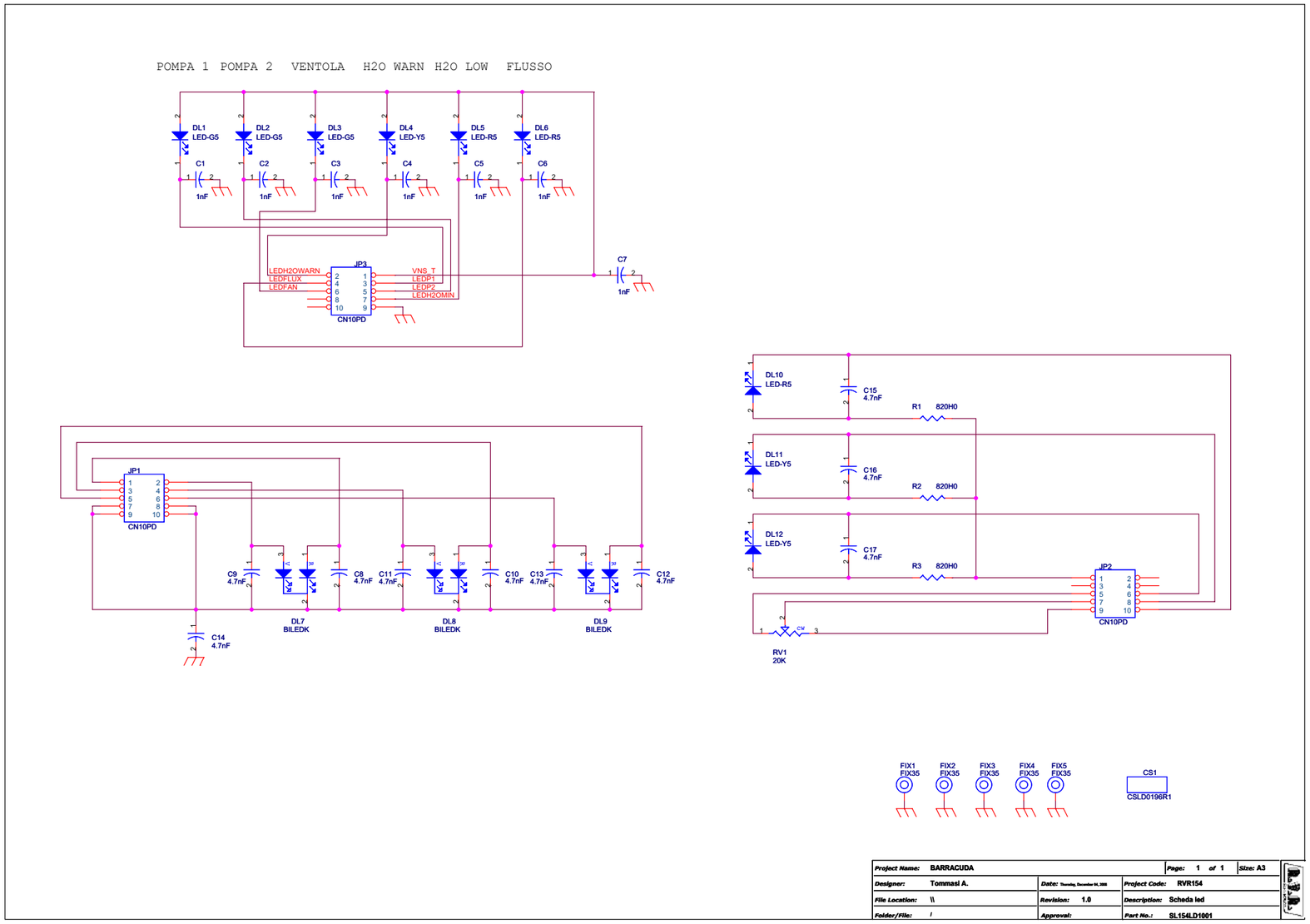

Scheda led Revised: 04/12/2008
SL154LD1001 Revision: 1.0
Tommasi A.

Item	Quantity	Reference	Part	Description
1	1	CS1	CSLD0196R1	Circuito stampato
2	7	C1,C2,C3,C4,C5,C6,C7	1nF	Cond. ceramico p 5mm
3	10	C8,C9,C10,C11,C12,C13, C14,C15,C16,C17	4.7nF	Cond. ceramico p 5mm
4	3	DL1,DL2,DL3	LED-G5	LED Verde dia. 5mm
5	3	DL5,DL6,DL10	LED-R5	LED Rosso dia. 5mm
6	3	DL7,DL8,DL9	BILEDK	Doppio led V-R 5mm Catodo com.
7	3	DL4, DL11,DL12	LED-Y5	LED Giallo dia. 5mm
8	5	FIX1,FIX2,FIX3,FIX4,FIX5	FIX35	Foro fissaggio 3.5mm
9	3	JP1,JP2,JP3	CN10PD	Connettore 10 poli Flat cs
10	1	RV1	20K	Trimmer Rg V 3296W
11	3	R1,R2,R3	820H0	Res. 1/4W 1%

8.13 Pass-Throught board (SLFILPSPJ2K1)

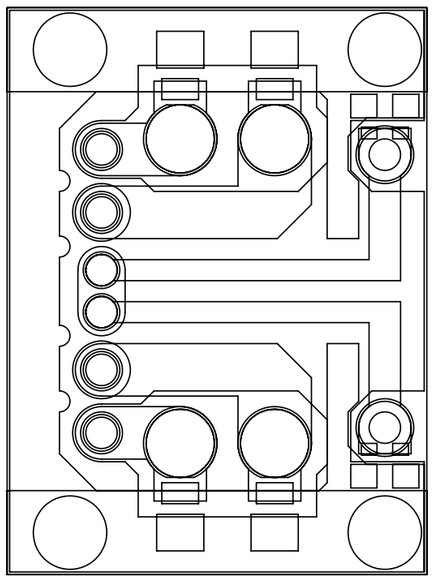

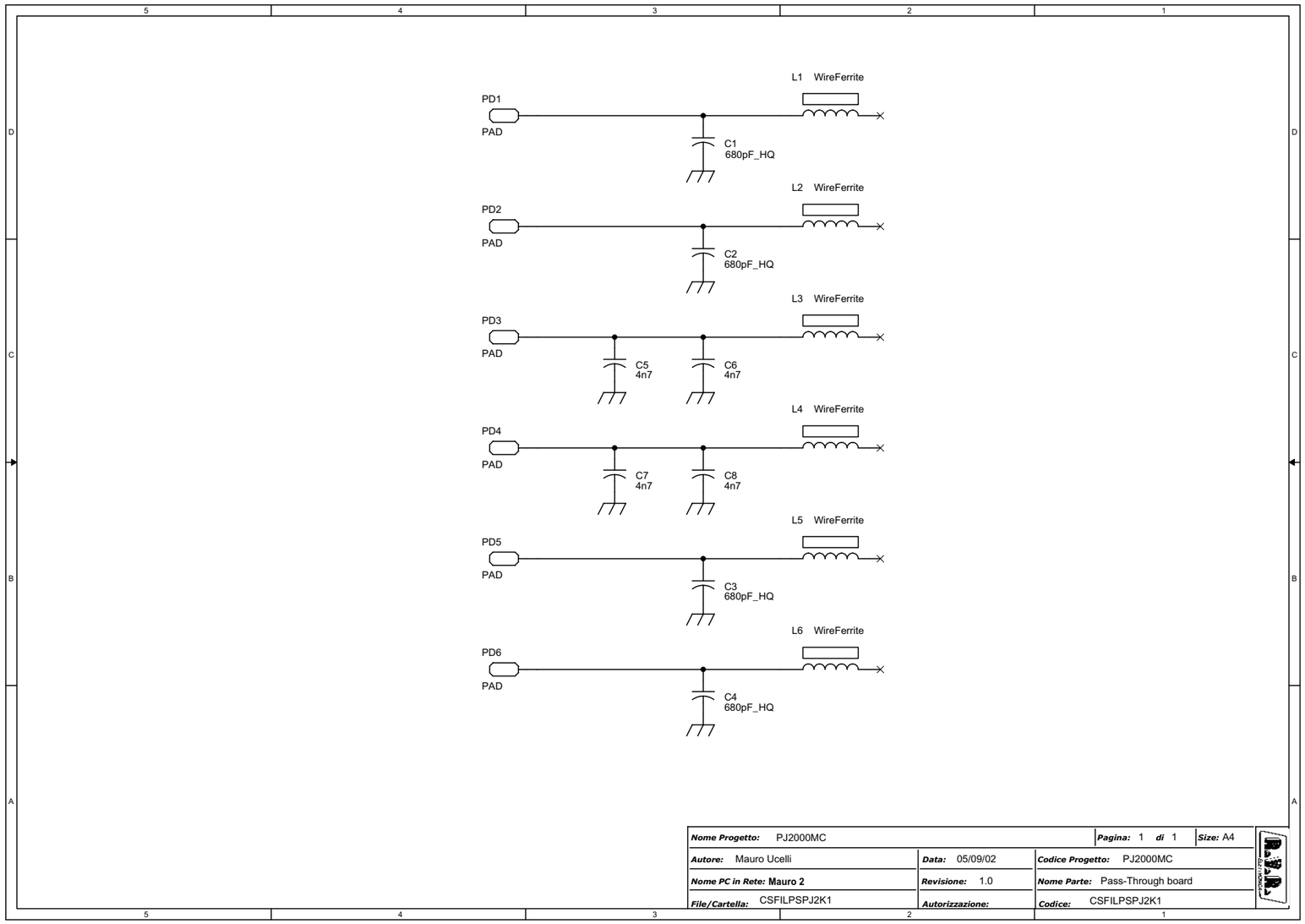

Pass-Through board
SLFILPSPJ2K1
Revision: 1.0
PJ2000MC
Mauro Ucelli
05/09/2002

Item	Quantity	Reference	Part	Description
1	4	C1,C2,C3,C4	680pF_HQ	;Condensatore Chip HQ
2	4	C5,C6,C7,C8	4n7	;Condensatore SMD size 0805
3	6	L1,L2,L3,L4, L5,L6	WireFerrite	;Filo di rame arg. diam. 1mm lung. 20mm con tubetto in Ferrite

8.14 CPU board (CPUPJ2KMC)

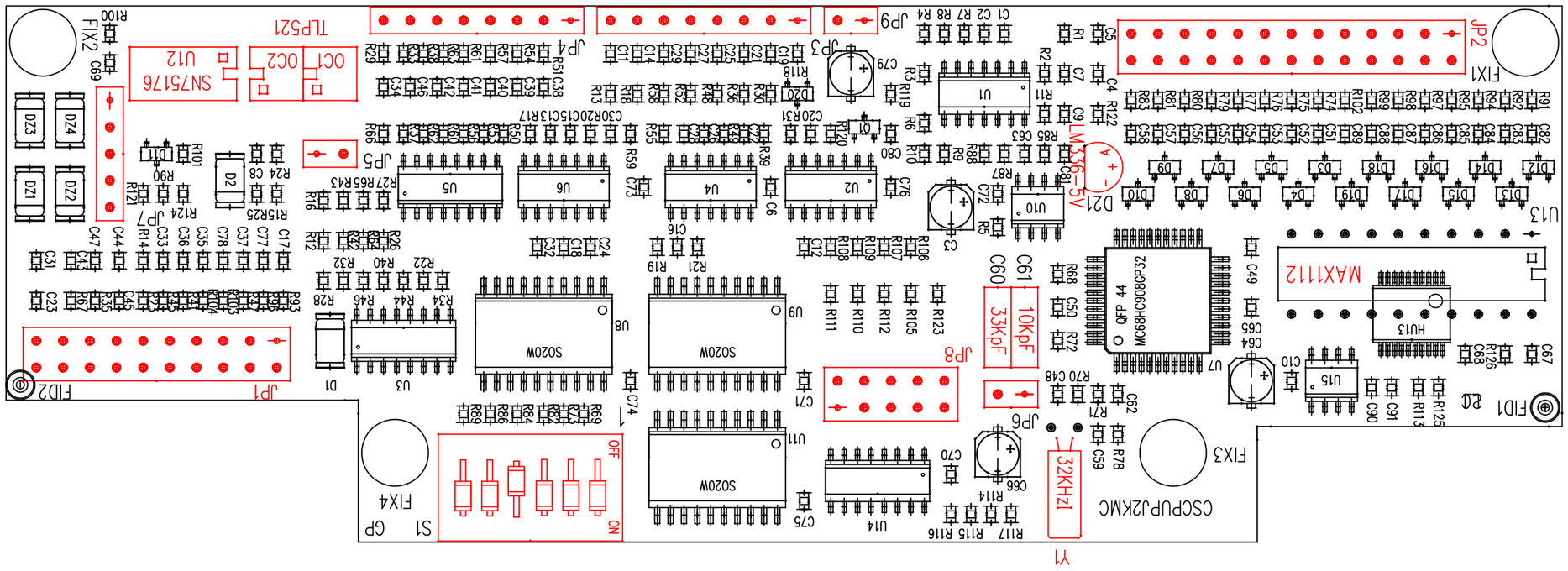

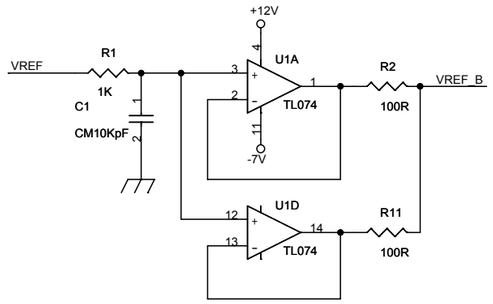

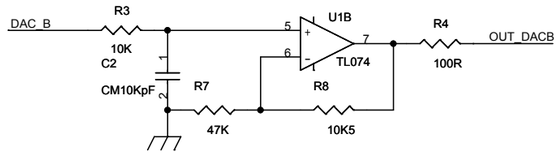

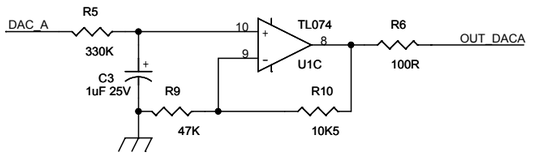

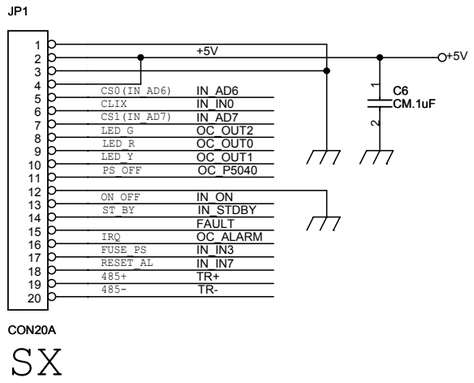

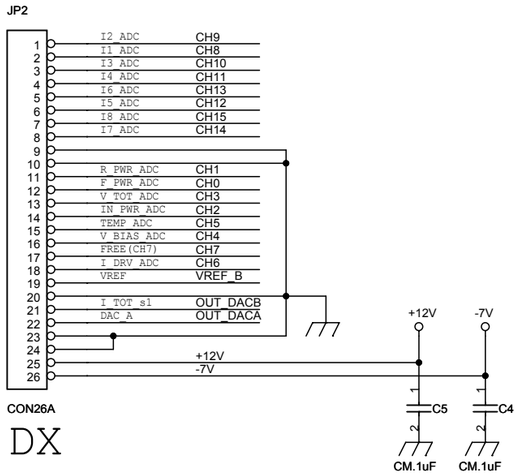

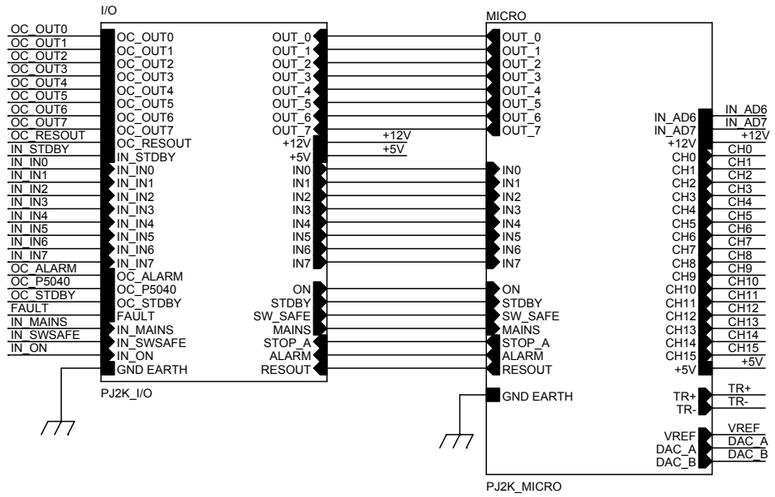

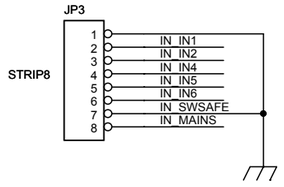

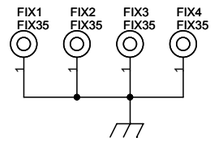

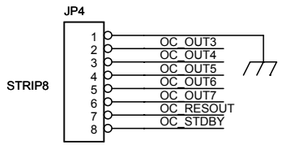

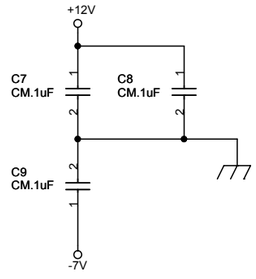

Nome Progetto: HC5_10KW		**Pagina:** 1 di 3	**Size:** A3
Autore: Mauro Ucelli	**Data:** 11/02/04	**Codice Progetto:** HC5-10	
Nome PC in Rete: \\ut_srv\progetti	**Revisione:** 1.0	**Nome Parte:** CPU Card - General Section	
File/Cartella: SLCPUPJ2KMC	**Autorizzazione:**	**Codice:** SLCPUPJ2KMC	

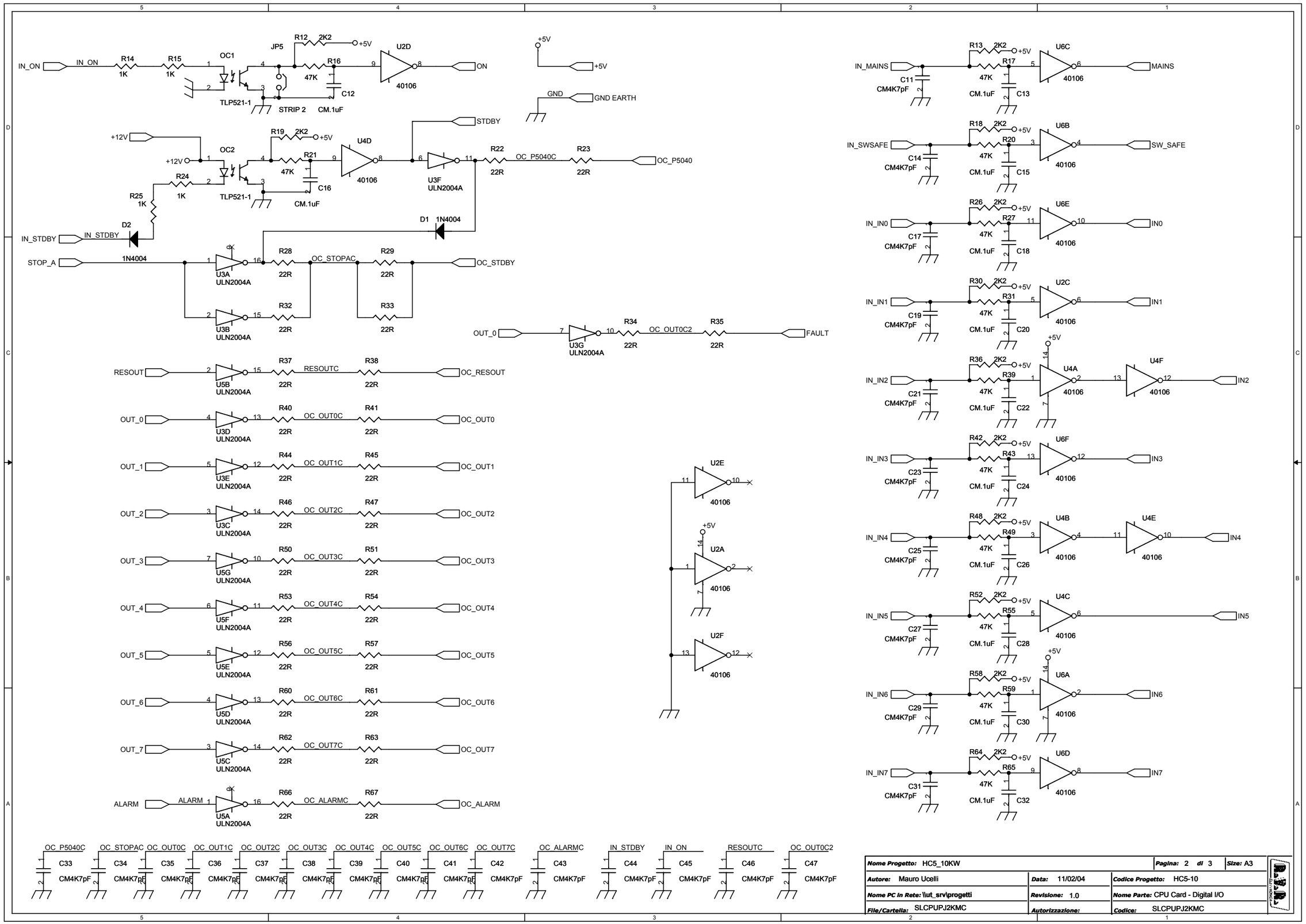
IN_ON
R14 1K
R15 1K
OC1
TLP521-1
JP5
R12 2K2
+5V
R16 47K
C12 CM.1uF
STRIP 2
U2D 40106
ON
+5V
GND
GND EARTH
+12V
OC2
R24 1K
R25 1K
R19 2K2
R21 47K
C16 CM.1uF
U4D 40106
STDBY
R22 22R
OC_P5040C
R23 22R
OC_P5040
U3F ULN2004A
D2 1N4004
D1 1N4004
IN_STDBY
STOP_A
U3A ULN2004A
R28 22R
OC_STOPAC
R29 22R
OC_STDBY
U3B ULN2004A
R32 22R
R33 22R
OUT_0
U3G ULN2004A
R34 22R
OC_OUT0C2
R35 22R
FAULT
RESOUT
U5B ULN2004A
R37 22R
RESOUTC
R38 22R
OC_RESOUT
OUT_0
U3D ULN2004A
R40 22R
OC_OUT0C
R41 22R
OC_OUT0
OUT_1
U3E ULN2004A
R44 22R
OC_OUT1C
R45 22R
OC_OUT1
OUT_2
U3C ULN2004A
R46 22R
OC_OUT2C
R47 22R
OC_OUT2
OUT_3
U5G ULN2004A
R50 22R
OC_OUT3C
R51 22R
OC_OUT3
OUT_4
U5F ULN2004A
R53 22R
OC_OUT4C
R54 22R
OC_OUT4
OUT_5
U5E ULN2004A
R56 22R
OC_OUT5C
R57 22R
OC_OUT5
OUT_6
U5D ULN2004A
R60 22R
OC_OUT6C
R61 22R
OC_OUT6
OUT_7
U5C ULN2004A
R62 22R
OC_OUT7C
R63 22R
OC_OUT7
ALARM
U5A ULN2004A
R66 22R
OC_ALARMC
R67 22R
OC_ALARM
U2E 40106
U2A 40106
U2F 40106
IN_MAINS
C11 CM4K7pF
R13 2K2
R17 47K
C13 CM.1uF
U6C 40106
MAINS
IN_SWSAFE
C14 CM4K7pF
R18 2K2
R20 47K
C15 CM.1uF
U6B 40106
SW_SAFE
IN_IN0
C17 CM4K7pF
R26 2K2
R27 47K
C18 CM.1uF
U6E 40106
IN0
IN_IN1
C19 CM4K7pF
R30 2K2
R31 47K
C20 CM.1uF
U2C 40106
IN1
IN_IN2
C21 CM4K7pF
R36 2K2
R39 47K
C22 CM.1uF
U4A 40106
U4F 40106
IN2
IN_IN3
C23 CM4K7pF
R42 2K2
R43 47K
C24 CM.1uF
U6F 40106
IN3
IN_IN4
C25 CM4K7pF
R48 2K2
R49 47K
C26 CM.1uF
U4B 40106
U4E 40106
IN4
IN_IN5
C27 CM4K7pF
R52 2K2
R55 47K
C28 CM.1uF
U4C 40106
IN5
IN_IN6
C29 CM4K7pF
R58 2K2
R59 47K
C30 CM.1uF
U6A 40106
IN6
IN_IN7
C31 CM4K7pF
R64 2K2
R65 47K
C32 CM.1uF
U6D 40106
IN7
OC_P5040C C33 CM4K7pF
OC_STOPAC C34 CM4K7pF
OC_OUT0C C35 CM4K7pF
OC_OUT1C C36 CM4K7pF
OC_OUT2C C37 CM4K7pF
OC_OUT3C C38 CM4K7pF
OC_OUT4C C39 CM4K7pF
OC_OUT5C C40 CM4K7pF
OC_OUT6C C41 CM4K7pF
OC_OUT7C C42 CM4K7pF
OC_ALARMC C43 CM4K7pF
IN_STDBY C44 CM4K7pF
IN_ON C45 CM4K7pF
RESOUTC C46 CM4K7pF
OC_OUT0C2 C47 CM4K7pF
Nome Progetto: HC5_10KW
Pagina: 2 di 3
Size: A3
Autore: Mauro Ucelli
Data: 11/02/04
Codice Progetto: HC5-10
Nome PC in Rete: \\ut_srv\progetti
Revisione: 1.0
Nome Parte: CPU Card - Digital I/O
File/Cartella: SLCPUPJ2KMC
Autorizzazione:
Codice: SLCPUPJ2KMC

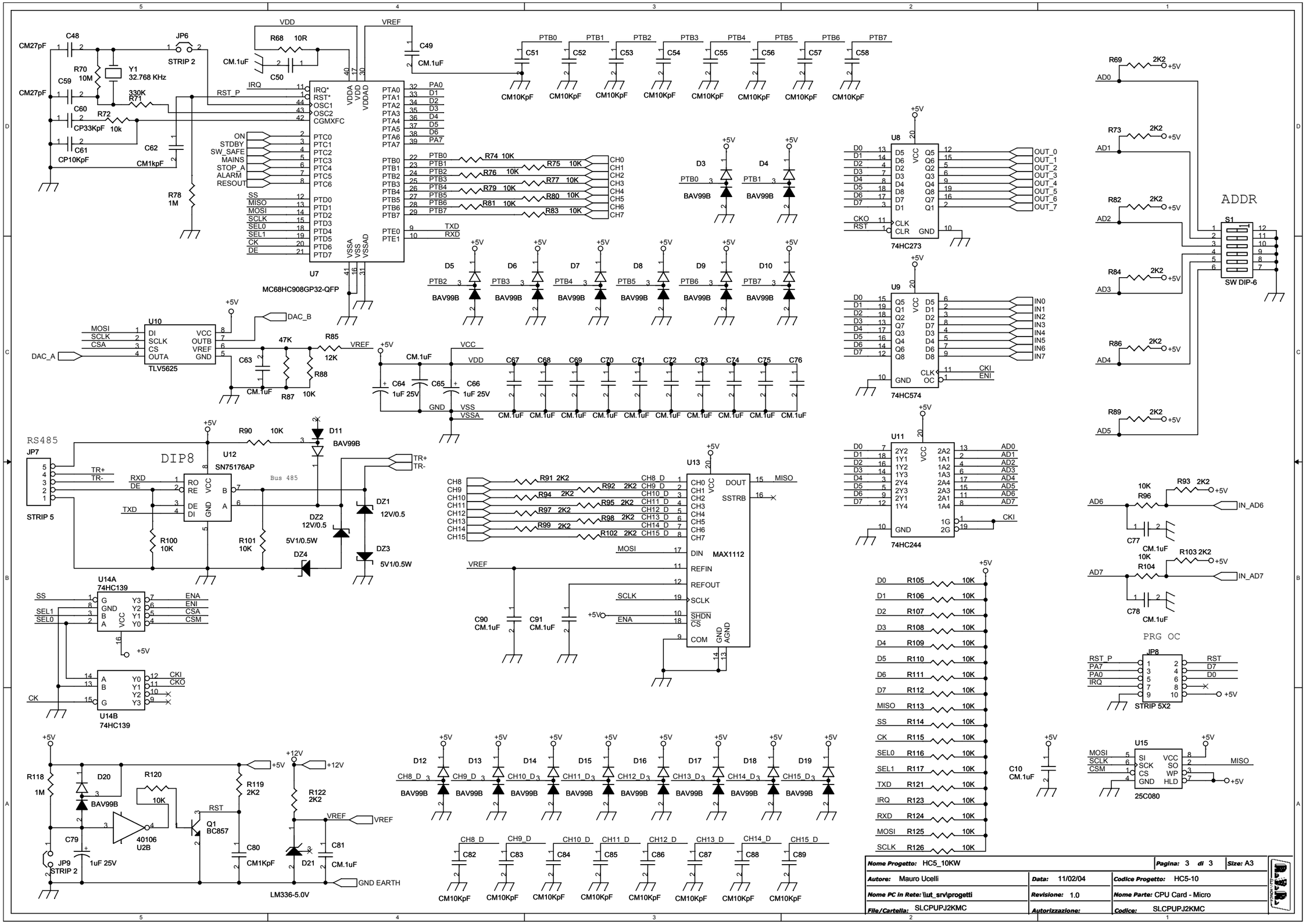
U7
MC68HC908GP32-QFP
U8
74HC273
U9
74HC574
U10
TLV5625
U11
74HC244
U12
SN75176AP
U13
MAX1112
U14A
74HC139
U14B
74HC139
U15
25C080
S1
SW DIP-6
ADDR
JP6
STRIP 2
JP7
STRIP 5
JP8
STRIP 5X2
JP9
STRIP 2
Y1
32.768 KHz
RS485
DIP8
Bus 485
LM336-5.0V
Nome Progetto: HC5_10KW
Pagina: 3 di 3
Size: A3
Autore: Mauro Ucelli
Data: 11/02/04
Codice Progetto: HC5-10
Nome PC in Rete: \\ut_srv\progetti
Revisione: 1.0
Nome Parte: CPU Card - Micro
File/Cartella: SLCPUPJ2KMC
Autorizzazione:
Codice: SLCPUPJ2KMC

Item	Quantity	Reference	Part
1	18	C1, C2, C51, C52, C53, C54, C55, C56, C57, C58, C82, C83, C84, C85, C86, C87, C88, C89	CM10KpF
2	4	C3, C64, C66, C79	1uF 25V
3	38	C4, C5, C6, C7, C8, C9, C10, C12, C13, C15, C16, C18, C20, C22, C24, C26, C28, C30, C32, C49, C50, C63, C65, C67, C68, C69, C70, C71, C72, C73, C74, C75, C76, C77, C78, C81, C90, C91	CM.1uF
4	25	C11, C14, C17, C19, C21, C23, C25, C27, C29, C31, C33, C34, C35, C36, C37, C38, C39, C40, C41, C42, C43, C44, C45, C46, C47	CM4K7pF
5	2	C48, C59	CM27pF
6	1	C60	CP33KpF
7	1	C61	CP10KpF
8	2	C62, C80	CM1KpF
9	2	DZ2, DZ1	12V/0.5
10	2	DZ4, DZ3	5V1/0.5W
11	2	D1, D2	1N4004
12	18	D3, D4, D5, D6, D7, D8, D9, D10, D11, D12, D13, D14, D15, D16, D17, D18, D19, D20	BAV99B
13	1	D21	LM336-5.0V
14	4	FIX1, FIX2, FIX3, FIX4	FIX35
15	1	JP1	CON20A
16	1	JP2	CON26A
17	2	JP4, JP3	STRIP8
18	3	JP5, JP6, JP9	STRIP 2
19	1	JP7	STRIP 5
20	1	JP8	STRIP 5X2
21	2	OC1, OC2	TLP521-1
22	1	Q1	BC857
23	5	R1, R14, R15, R24, R25	1K
24	4	R2, R4, R6, R11	100R
25	35	R3, R72, R74, R75, R76, R77, R79, R80, R81, R83, R88, R90, R96, R100, R101, R104, R105, R106, R107, R108, R109, R110, R111, R112, R113, R114, R115, R116, R117, R120, R121, R123, R124, R125, R126	10K
26	2	R71, R5	330K
27	15	R7, R9, R16, R17, R20, R21, R27, R31, R39, R43, R49, R55, R59, R65, R87	47K
28	2	R8, R10	10K5
29	30	R12, R13, R18, R19, R26, R30, R36, R42, R48, R52, R58, R64, R69, R73, R82, R84, R86, R89, R91, R92, R93, R94, R95, R97, R98, R99, R102, R103, R119, R122	2K2
30	28	R22, R23, R28, R29, R32, R33, R34, R35, R37, R38, R40, R41, R44, R45, R46, R47, R50, R51, R53, R54, R56, R57, R60, R61, R62, R63, R66, R67	22R
31	1	R68	10R
32	1	R70	10M
33	2	R118, R78	1M
34	1	R85	12K
35	1	S1	SW DIP-6
36	1	U1	TL074
37	3	U2, U4, U6	40106
38	2	U5, U3	ULN2004A
39	1	U7	MC68HC908GP32-QFP
40	1	U8	74HC273
41	1	U9	74HC574
42	1	U10	TLV5625
43	1	U11	74HC244
44	1	U12	SN75176AP
45	1	U13	MAX1112
46	1	U14	74HC139
47	1	U15	25C080
48	1	Y1	32.768 KHz

8.14.1 Set module address

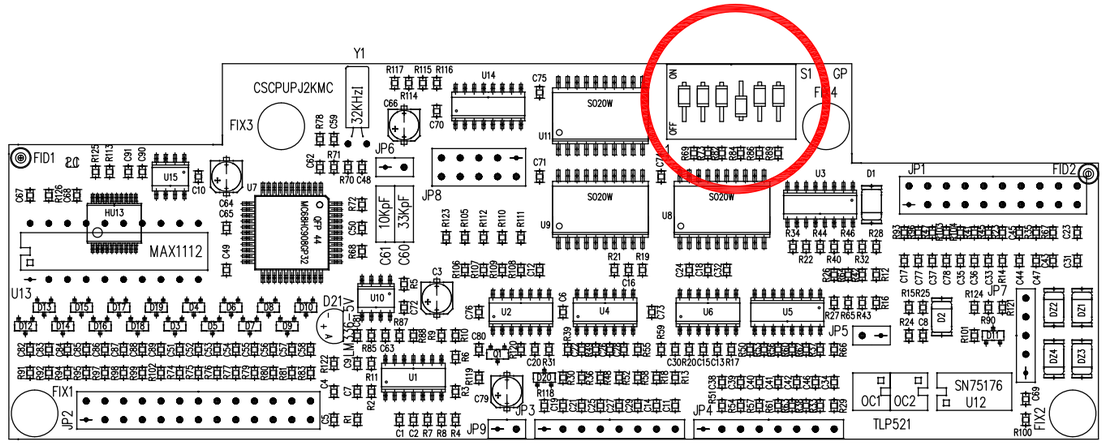

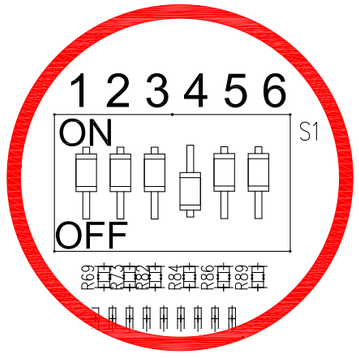

MODULE ADDRESS

Module 1
Address 8

Module 2
Address 9

Module 3
Address 10

Module 4
Address 11

8.15 Bias board (SLMTPRTPJ4K1)

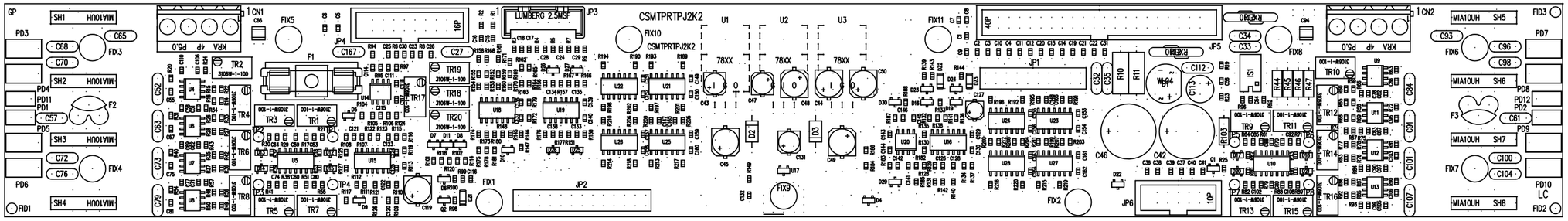

NOME PROGETTO: P04000M-C		NOME PARTE: BIAS & MEASURE BOARD			
AUTORE: M. UCELLI		DATA: 07/06/2006	REVISIONE: 1.0	SCALA: 1:1	SIZE: A3	PAGINA: 1 DI 1
ARCHIVIAZIONE ELETTRONICA: "CARTELLA PROGETTI" SU "UCDISK"		CODICE PROGETTO: 046	CODICE DISEGNO: SLMTPRTPJ4K1		
MATERIALE: <>	TRATTAMENTO: <>	PROFILO: <>	STATO: ESECUTIVO		

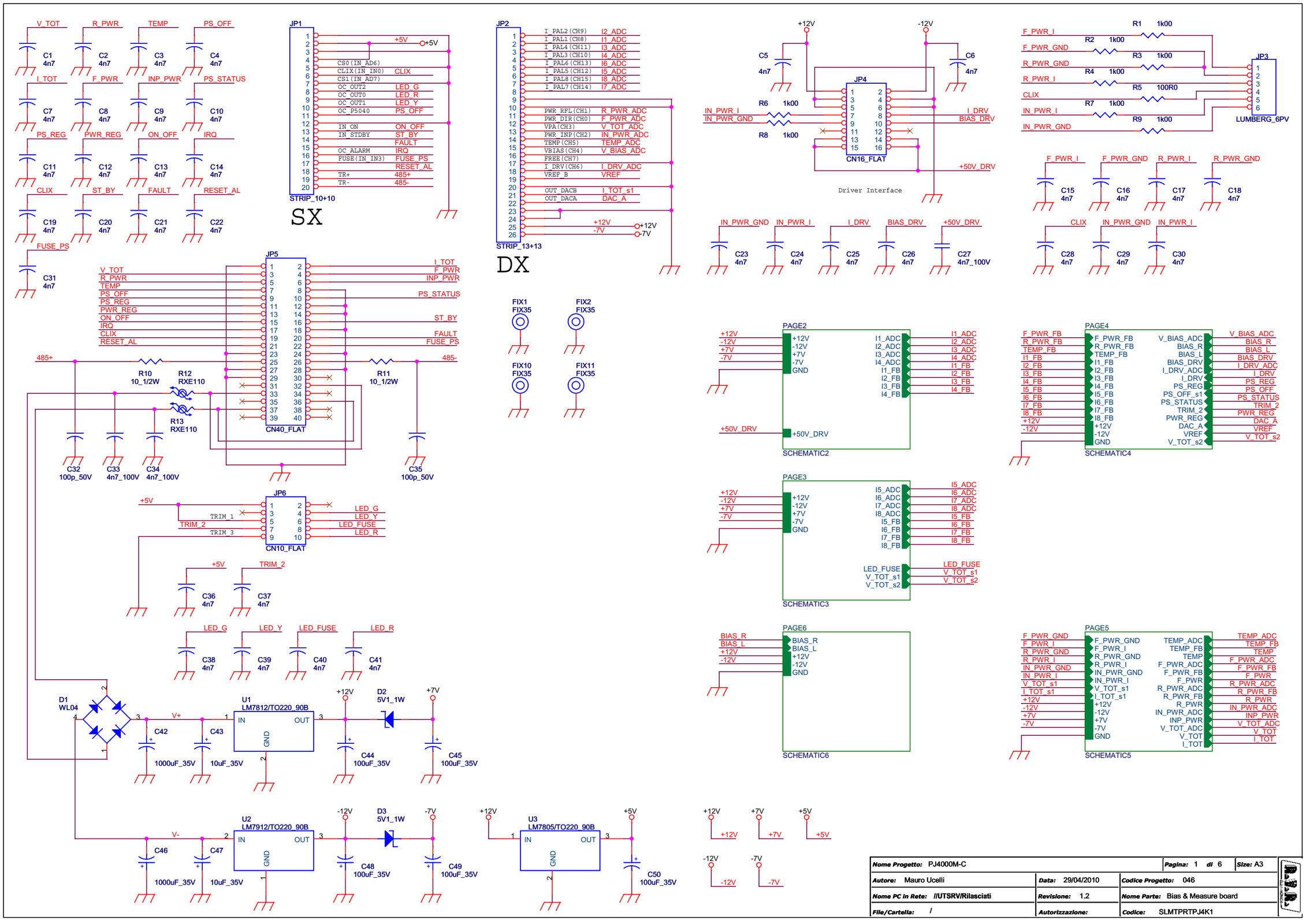
V_TOT R_PWR TEMP PS_OFF
C1 4n7
C2 4n7
C3 4n7
C4 4n7
I_TOT F_PWR INP_PWR PS_STATUS
C7 4n7
C8 4n7
C9 4n7
C10 4n7
PS_REG PWR_REG ON_OFF IRQ
C11 4n7
C12 4n7
C13 4n7
C14 4n7
CLIX ST_BY FAULT RESET_AL
C19 4n7
C20 4n7
C21 4n7
C22 4n7
FUSE_PS
C31 4n7
JP1
+5V
CS0(IN_AD6)
CLIX(IN_IN0) CLIX
CS1(IN_AD7)
OC_OUT2 LED_G
OC_OUT0 LED_R
OC_OUT1 LED_Y
OC_P5040 PS_OFF
IN_ON ON_OFF
IN_STDBY ST_BY
FAULT
OC_ALARM IRQ
FUSE(IN_IN3) FUSE_PS
RESET_AL
TR+ 485+
TR- 485-
STRIP_10+10
SX
JP2
I_PAL2(CH9) I2_ADC
I_PAL1(CH8) I1_ADC
I_PAL4(CH11) I3_ADC
I_PAL3(CH10) I4_ADC
I_PAL6(CH13) I6_ADC
I_PAL5(CH12) I5_ADC
I_PAL8(CH15) I8_ADC
I_PAL7(CH14) I7_ADC
PWR_RFL(CH1) R_PWR_ADC
PWR_DIR(CH0) F_PWR_ADC
VPA(CH3) V_TOT_ADC
PWR_INP(CH2) IN_PWR_ADC
TEMP(CH5) TEMP_ADC
VBIAS(CH4) V_BIAS_ADC
FREE(CH7)
I_DRV(CH6) I_DRV_ADC
VREF_B VREF
OUT_DACB I_TOT_s1
OUT_DACA DAC_A
+12V
-7V
STRIP_13+13
DX
+12V -12V
C5 4n7
C6 4n7
JP4
IN_PWR_I
IN_PWR_GND
R6 1k00
R8 1k00
I_DRV
BIAS_DRV
+50V_DRV
CN16_FLAT
Driver Interface
R1 1k00
R2 1k00
R3 1k00
R4 1k00
R5 100R0
R7 1k00
R9 1k00
F_PWR_I
F_PWR_GND
R_PWR_GND
R_PWR_I
CLIX
IN_PWR_I
IN_PWR_GND
JP3
LUMBERG_6PV
F_PWR_I F_PWR_GND R_PWR_I R_PWR_GND
C15 4n7
C16 4n7
C17 4n7
C18 4n7
CLIX IN_PWR_GND IN_PWR_I
C28 4n7
C29 4n7
C30 4n7
IN_PWR_GND IN_PWR_I I_DRV BIAS_DRV +50V_DRV
C23 4n7
C24 4n7
C25 4n7
C26 4n7
C27 4n7_100V
JP5
V_TOT R_PWR TEMP PS_OFF PS_REG PWR_REG ON_OFF IRQ CLIX RESET_AL
I_TOT F_PWR INP_PWR PS_STATUS ST_BY FAULT FUSE_PS
CN40_FLAT
485+
485-
R10 10_1/2W
R11 10_1/2W
R12 RXE110
R13 RXE110
C32 100p_50V
C33 4n7_100V
C34 4n7_100V
C35 100p_50V
FIX1 FIX35
FIX2 FIX35
FIX10 FIX35
FIX11 FIX35
PAGE2
+12V -12V +7V -7V GND
I1_ADC I2_ADC I3_ADC I4_ADC I1_FB I2_FB I3_FB I4_FB
+50V_DRV
SCHEMATIC2
PAGE4
F_PWR_FB R_PWR_FB TEMP_FB I1_FB I2_FB I3_FB I4_FB I5_FB I6_FB I7_FB I8_FB +12V -12V GND
V_BIAS_ADC BIAS_R BIAS_L BIAS_DRV I_DRV_ADC I_DRV PS_REG PS_OFF_s1 PS_STATUS TRIM_2 PWR_REG DAC_A VREF V_TOT_s2
SCHEMATIC4
JP6
+5V
TRIM_1 TRIM_2 TRIM_3
LED_G LED_Y LED_FUSE LED_R
CN10_FLAT
C36 4n7
C37 4n7
C38 4n7
C39 4n7
C40 4n7
C41 4n7
PAGE3
I5_ADC I6_ADC I7_ADC I8_ADC I5_FB I6_FB I7_FB I8_FB LED_FUSE V_TOT_s1 V_TOT_s2
SCHEMATIC3
PAGE6
BIAS_R BIAS_L +12V -12V GND
SCHEMATIC6
PAGE5
F_PWR_GND F_PWR_I R_PWR_GND R_PWR_I IN_PWR_GND IN_PWR_I V_TOT_s1 I_TOT_s1 +12V -12V +7V -7V GND
TEMP_ADC TEMP_FB TEMP F_PWR_ADC F_PWR_FB F_PWR R_PWR_ADC R_PWR_FB R_PWR IN_PWR_ADC INP_PWR V_TOT_ADC V_TOT I_TOT
SCHEMATIC5
D1 WL04
U1 LM7812/TO220_90B
IN OUT GND
V+
C42 1000uF_35V
C43 10uF_35V
D2 5V1_1W
C44 100uF_35V
C45 100uF_35V
U2 LM7912/TO220_90B
V-
C46 1000uF_35V
C47 10uF_35V
D3 5V1_1W
C48 100uF_35V
C49 100uF_35V
U3 LM7805/TO220_90B
C50 100uF_35V
Nome Progetto: PJ4000M-C
Pagina: 1 di 6
Size: A3
Autore: Mauro Ucelli
Data: 29/04/2010
Codice Progetto: 046
Nome PC in Rete: //UTSRV/Rilasciati
Revisione: 1.2
Nome Parte: Bias & Measure board
File/Cartella: /
Autorizzazione:
Codice: SLMTPRTPJ4K1

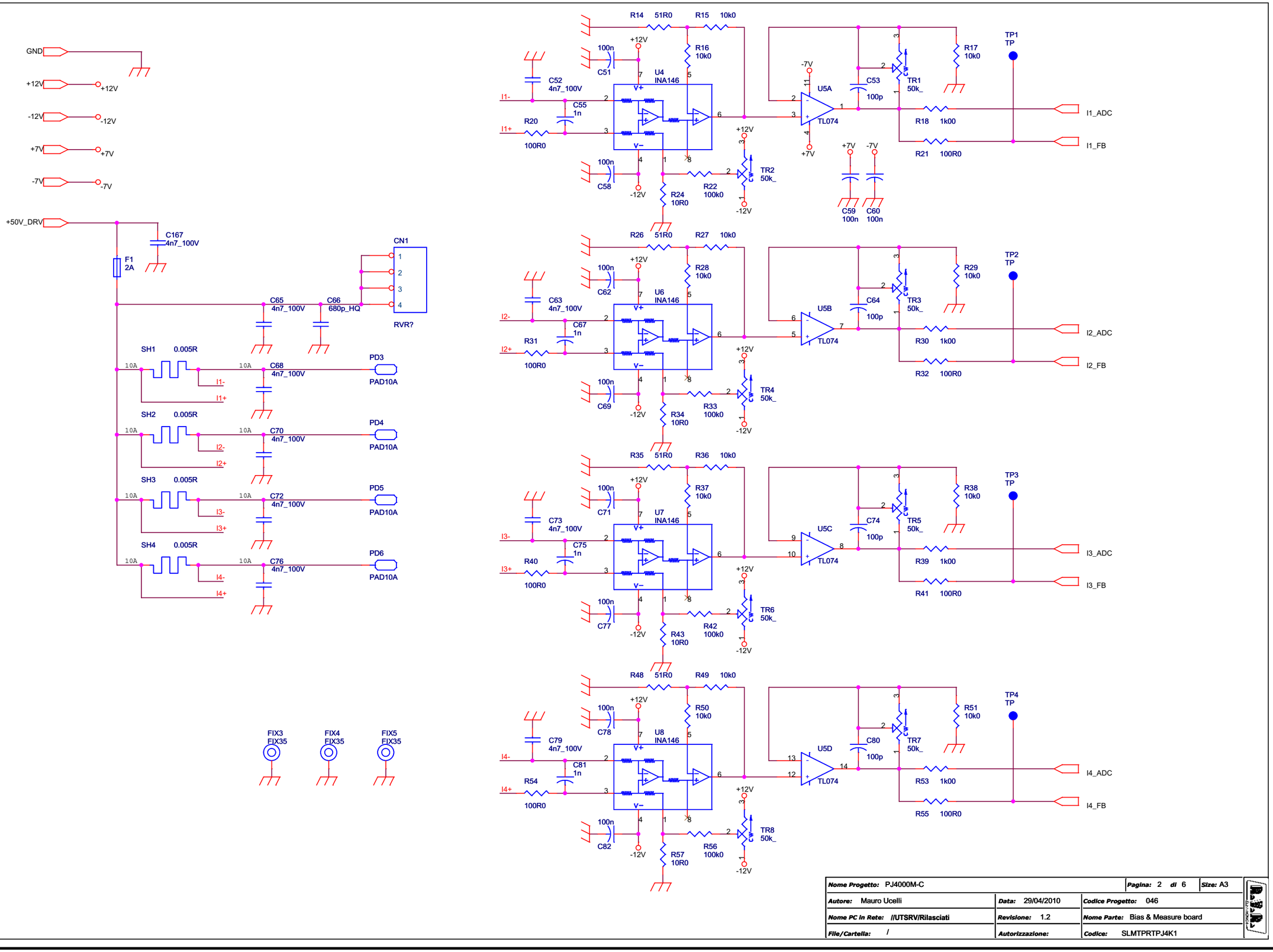

Nome Progetto: PJ4000M-C		**Pagina:** 2 di 6	**Size:** A3
Autore: Mauro Ucelli	**Data:** 29/04/2010	**Codice Progetto:** 046	
Nome PC in Rete: //UTSRV/Rilasciati	**Revisione:** 1.2	**Nome Parte:** Bias & Measure board	
File/Cartella: /	**Autorizzazione:**	**Codice:** SLMTPRTPJ4K1	

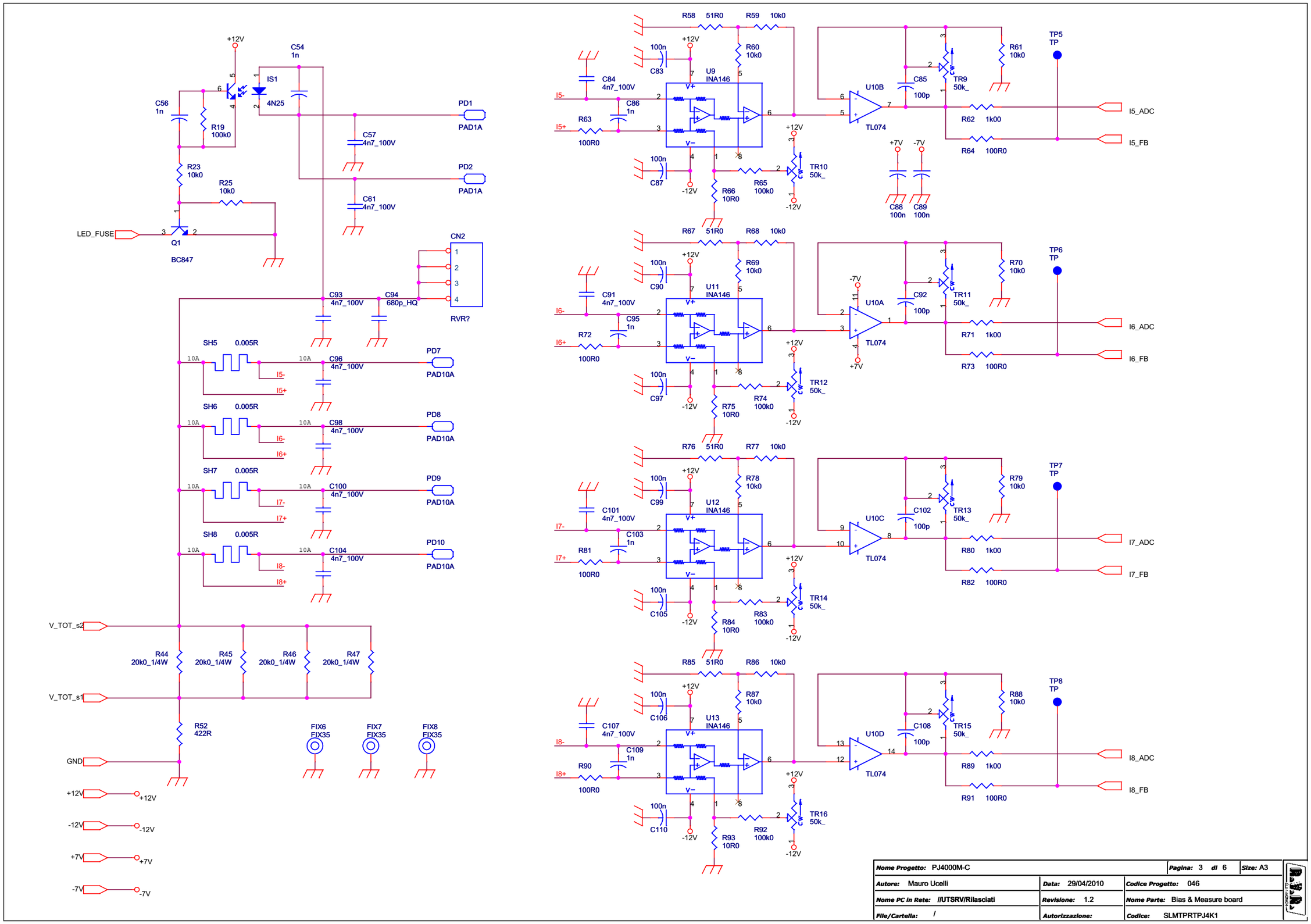

Nome Progetto: PJ4000M-C			**Pagina:** 3 **di** 6 **Size:** A3
Autore: Mauro Ucelli	**Data:** 29/04/2010	**Codice Progetto:** 046	
Nome PC in Rete: /IUTSRV/Rilasciati	**Revisione:** 1.2	**Nome Parte:** Bias & Measure board	
File/Cartella: /	**Autorizzazione:**	**Codice:** SLMTPRTPJ4K1	

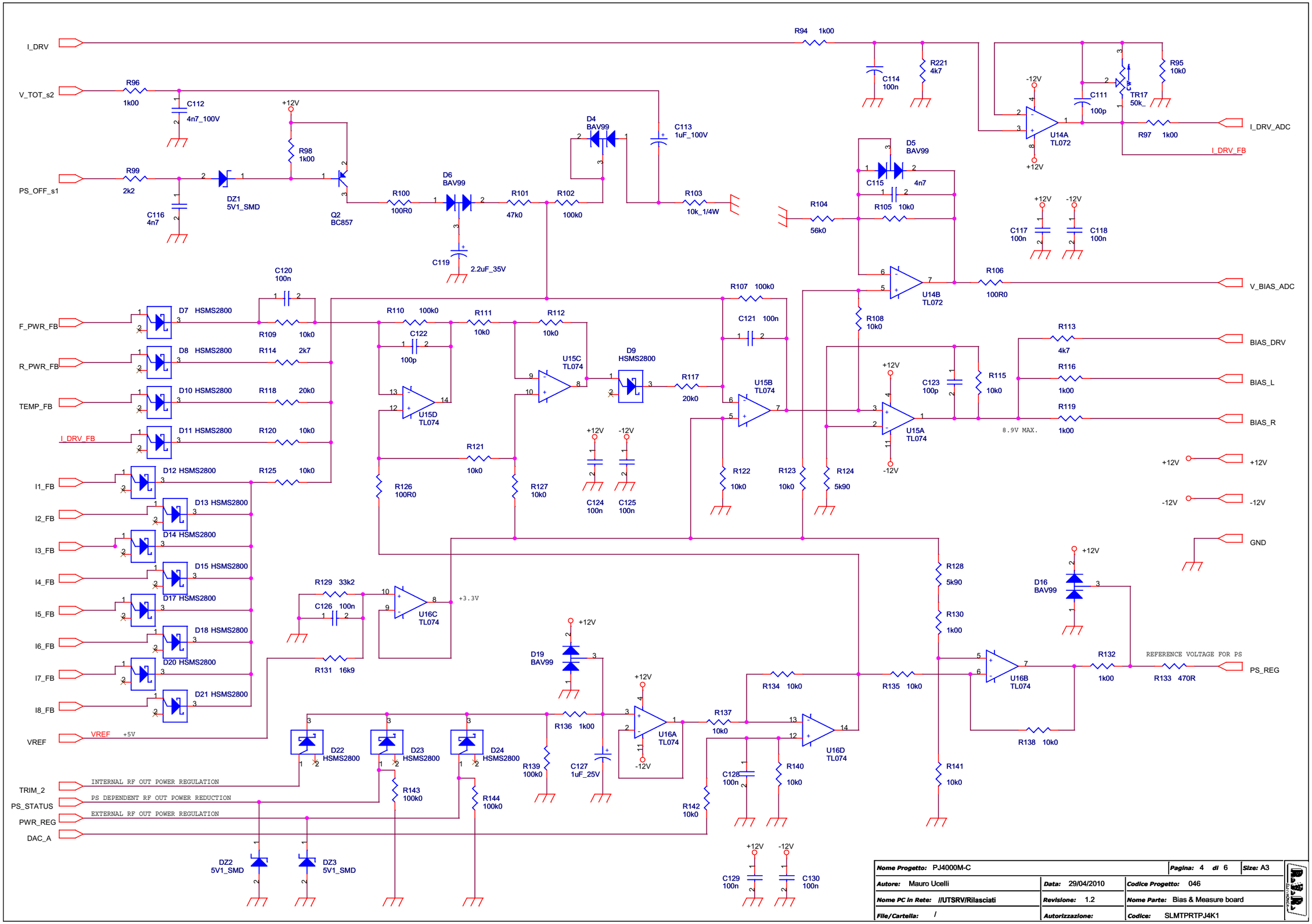
I_DRV
V_TOT_s2
PS_OFF_s1
F_PWR_FB
R_PWR_FB
TEMP_FB
I_DRV_FB
I1_FB
I2_FB
I3_FB
I4_FB
I5_FB
I6_FB
I7_FB
I8_FB
VREF
TRIM_2
PS_STATUS
PWR_REG
DAC_A
R94 1k00
C114 100n
R221 4k7
R95 10k0
C111 100p
TR17 50k_
R97 1k00
I_DRV_ADC
I_DRV_FB
U14A TL072
R96 1k00
C112 4n7_100V
R98 1k00
R99 2k2
C116 4n7
DZ1 5V1_SMD
Q2 BC857
D4 BAV99
D6 BAV99
C113 1uF_100V
R100 100R0
R101 47k0
R102 100k0
R103 10k_1/4W
C119 2.2uF_35V
D5 BAV99
C115 4n7
R104 56k0
R105 10k0
C117 100n
C118 100n
U14B TL072
R106 100R0
V_BIAS_ADC
R108 10k0
C120 100n
D7 HSMS2800
D8 HSMS2800
D10 HSMS2800
D11 HSMS2800
D12 HSMS2800
D13 HSMS2800
D14 HSMS2800
D15 HSMS2800
D17 HSMS2800
D18 HSMS2800
D20 HSMS2800
D21 HSMS2800
R109 10k0
R114 2k7
R118 20k0
R120 10k0
R125 10k0
R110 100k0
R111 10k0
R112 10k0
C122 100p
U15C TL074
U15D TL074
D9 HSMS2800
R117 20k0
R107 100k0
C121 100n
U15B TL074
R121 10k0
R126 100R0
R127 10k0
C124 100n
C125 100n
R122 10k0
R123 10k0
R124 5k90
U15A TL074
C123 100p
R115 10k0
R113 4k7
R116 1k00
R119 1k00
BIAS_DRV
BIAS_L
BIAS_R
8.9V MAX.
+12V
-12V
GND
R129 33k2
C126 100n
R131 16k9
U16C TL074
+3.3V
D19 BAV99
D16 BAV99
R128 5k90
R130 1k00
R141 10k0
R134 10k0
R135 10k0
U16B TL074
R132 1k00
R133 470R
REFERENCE VOLTAGE FOR PS
PS_REG
R136 1k00
R137 10k0
U16A TL074
U16D TL074
R138 10k0
R139 100k0
C127 1uF_25V
R140 10k0
C128 100n
R142 10k0
D22 HSMS2800
D23 HSMS2800
D24 HSMS2800
R143 100k0
R144 100k0
DZ2 5V1_SMD
DZ3 5V1_SMD
INTERNAL RF OUT POWER REGULATION
PS DEPENDENT RF OUT POWER REDUCTION
EXTERNAL RF OUT POWER REGULATION
C129 100n
C130 100n
Nome Progetto: PJ4000M-C
Pagina: 4 di 6
Size: A3
Autore: Mauro Ucelli
Data: 29/04/2010
Codice Progetto: 046
Nome PC in Rete: //UTSRV/Rilasciati
Revisione: 1.2
Nome Parte: Bias & Measure board
File/Cartella: /
Autorizzazione:
Codice: SLMTPRTPJ4K1

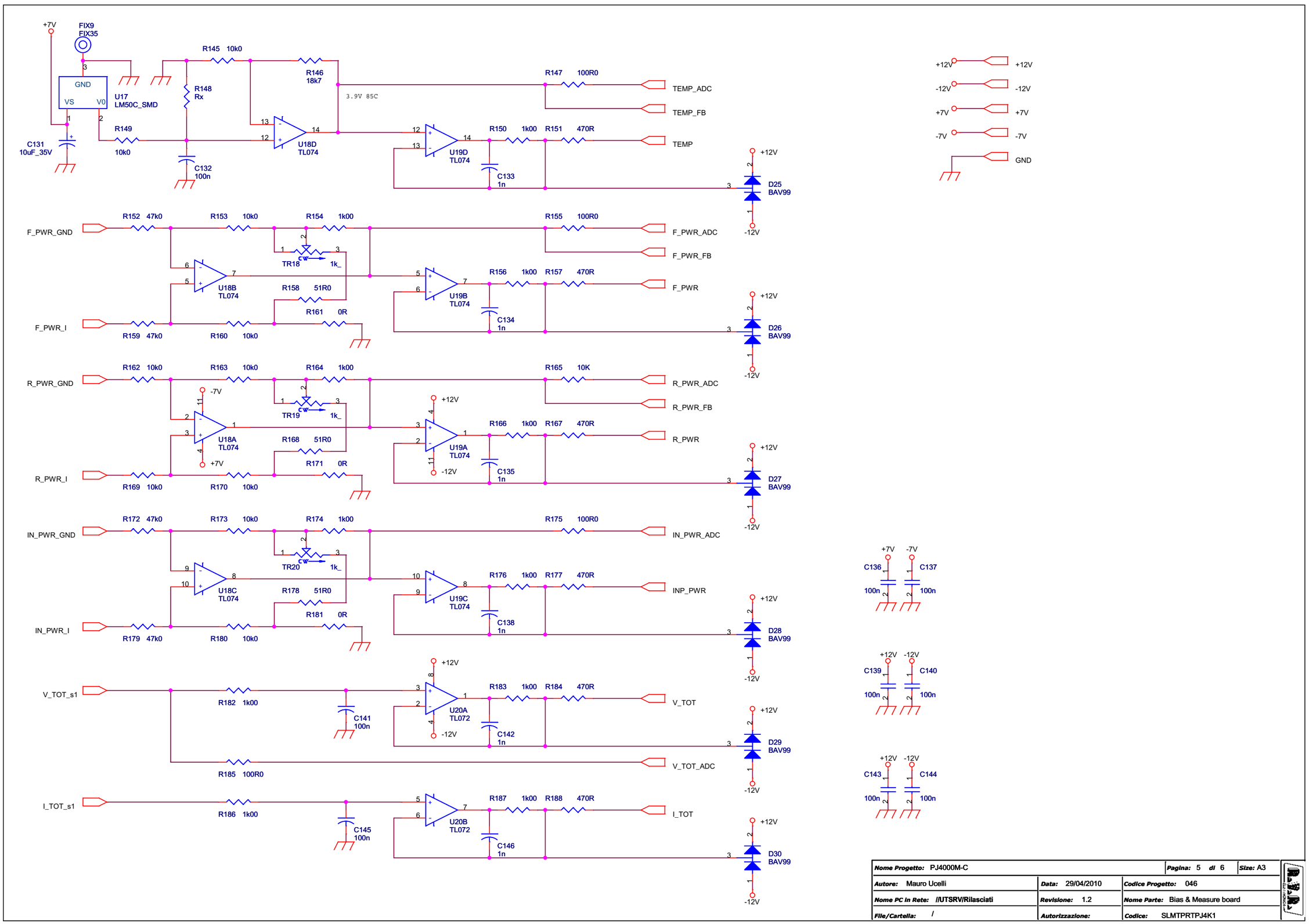
+7V
FIX9
FIX35
GND
VS
V0
U17
LM50C_SMD
C131
10uF_35V
R145 10k0
R146
18k7
R147 100R0
R148
Rx
R149
10k0
C132
100n
3.9V 85C
TEMP_ADC
TEMP_FB
TEMP
U18D
TL074
R150 1k00
R151 470R
U19D
TL074
C133
1n
+12V
D25
BAV99
-12V
F_PWR_GND
R152 47k0
R153 10k0
R154 1k00
R155 100R0
F_PWR_ADC
F_PWR_FB
TR18
1k_
U18B
TL074
R158 51R0
R161 0R
F_PWR_I
R159 47k0
R160 10k0
U19B
TL074
R156 1k00
R157 470R
F_PWR
C134
1n
D26
BAV99
R_PWR_GND
R162 10k0
R163 10k0
R164 1k00
R165 10K
R_PWR_ADC
R_PWR_FB
-7V
TR19
1k_
U18A
TL074
R168 51R0
R171 0R
+7V
R_PWR_I
R169 10k0
R170 10k0
U19A
TL074
R166 1k00
R167 470R
R_PWR
C135
1n
D27
BAV99
IN_PWR_GND
R172 47k0
R173 10k0
R174 1k00
R175 100R0
IN_PWR_ADC
TR20
1k_
U18C
TL074
R178 51R0
R181 0R
IN_PWR_I
R179 47k0
R180 10k0
U19C
TL074
R176 1k00
R177 470R
INP_PWR
C138
1n
D28
BAV99
V_TOT_s1
R182 1k00
C141
100n
U20A
TL072
R183 1k00
R184 470R
V_TOT
C142
1n
D29
BAV99
R185 100R0
V_TOT_ADC
I_TOT_s1
R186 1k00
C145
100n
U20B
TL072
R187 1k00
R188 470R
I_TOT
C146
1n
D30
BAV99
+12V
-12V
+7V
-7V
GND
C136
C137
100n
C139
C140
C143
C144
Nome Progetto: PJ4000M-C
Pagina: 5 di 6
Size: A3
Autore: Mauro Ucelli
Data: 29/04/2010
Codice Progetto: 046
Nome PC in Rete: //UTSRV/Rilasciati
Revisione: 1.2
Nome Parte: Bias & Measure board
File/Cartella: /
Autorizzazione:
Codice: SLMTPRTPJ4K1

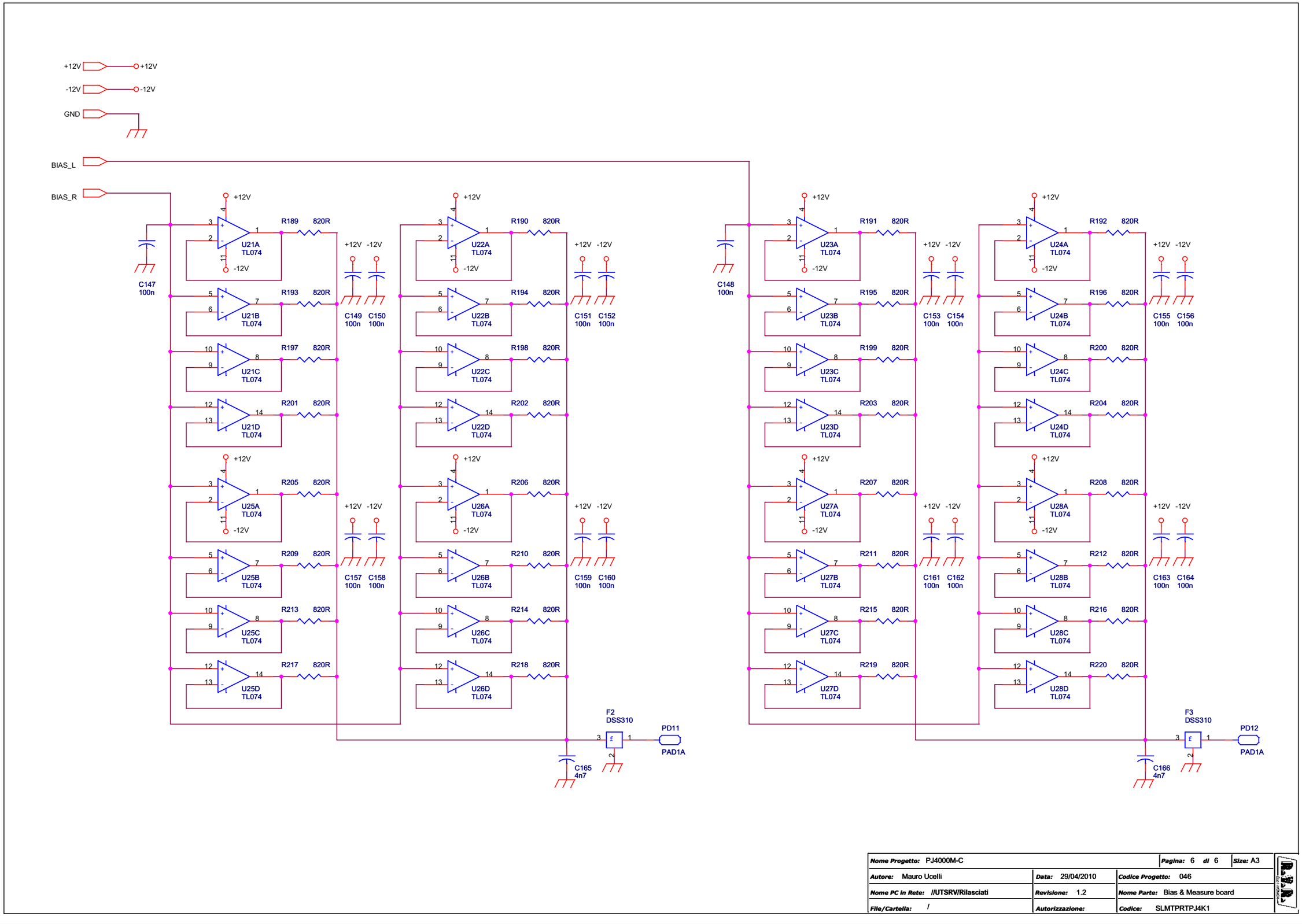

Nome Progetto: PJ4000M-C		**Pagina:** 6 **di** 6	**Size:** A3
Autore: Mauro Ucelli	**Data:** 29/04/2010	**Codice Progetto:** 046	
Nome PC in Rete: //UTSRV/Rilasciati	**Revisione:** 1.2	**Nome Parte:** Bias & Measure board	
File/Cartella: /	**Autorizzazione:**	**Codice:** SLMTPRTPJ4K1	

Bias & Measure board
SLMTPRTPJ4K1
Revision: 1.2
046
PJ4000M-C
Mauro Ucelli
29/04/2010

Item	Quantity	Reference	Part	Description	RVR Code	
1	2	CN2,CN1	Connettore meccan.	Semilavorato RVR	FISCAVKIT113 (PZ1) + BLCFCAV113 (PZ2)	
2	40	C1,C2,C3,C4,C5,C6,C7,C8,	4n7	(0805/0603):Componente SMD size 0805 o 0603	CCC085472KXC	
		C9,C10,C11,C12,C13,C14,				
		C15,C16,C17,C18,C19,C20,				
		C21,C22,C23,C24,C25,C26,				
		C28,C29,C30,C31,C36,C37,				
		C38,C39,C40,C41,C115,				
		C116,C165,C166				
3	25	C27,C33,C34,C52,C57,C61,	4n7_100V	(CCP5):Condesatore Ceramico passo 5.08	CMS472MC101	
		C63,C65,C68,C70,C72,C73,				
		C76,C79,C84,C91,C93,C96,				
		C98,C100,C101,C104,C107,				
		C112,C167				
4	2	C32,C35	100p_50V	(CCP5):Condesatore Ceramico passo 5.08	CKM101KC600C	
5	2	C46,C42	1000uF_35V	(CEV_D13.2P5.08):Cond. Elet. Vert. diam. 13.2mm passo 5.08	CEA108MC350V	
6	3	C43,C47,C131	10uF_35V	(CES5X5.5):Cond. Elet. All. SMD diametro 5 altezza 5.5	CES106B350	
7	5	C44,C45,C48,C49,C50	100uF_35V	(CES6.3X8):Cond. Elet. All. SMD diametro 6.5 altezza 8	CES107E250	
8	1	C119	2,2uF_35V	Cond. Elet. All. SMD diametro 4 altezza 5,5	CES225A500	
9	58	C51,C58,C59,C60,C62,C69,	100n	(0805/0603):Componente SMD size 0805 o 0603	CCC085104KXC	
		C71,C77,C78,C82,C83,C87,				
		C88,C89,C90,C97,C99,C105,				
		C106,C110,C114,C117,C118,				
		C120,C121,C124,C125,C126,				
		C128,C129,C130,C132,C136,				
		C137,C139,C140,C141,C143,				
		C144,C145,C147,C148,C149,				
		C150,C151,C152,C153,C154,				
		C155,C156,C157,C158,C159,				
		C160,C161,C162,C163,C164				
10	11	C53,C64,C74,C80,C85,C92,	100p	(0805/0603):Componente SMD size 0805 o 0603	CCC085101JCC	
		C102,C108,C111,C122,C123				
11	16	C54,C55,C56,C67,C75,C81,	1n	(0805/0603):Componente SMD size 0805 o 0603	CCC085102JNC	
		C86,C95,C103,C109,C133,				
		C134,C135,C138,C142,C146				
12	2	C94,C66	680p_HQ	(CSMD_HQ):Chip HQ 680p	CHQ681JA101	
13	1	C113	1uF_100V	(CEV_D6.6P2.54):Cond. Elet. Vert. diam. 6.5mm passo 2.54	CEA105MA500V	
14	1	C127	1uF_25V	(CES4X5.5):Cond. Elet. All. SMD diametro 4 altezza 5.5	CES105A500	
15	3	DZ1,DZ2,DZ3	5V1_SMD	(MINIMELF):Zener SMD 5V1	DIZ5V1MINI	
16	1	D1	WL04	(WL04):Ponte diodi rettificatore circolare	PNRWL02	
17	2	D3,D2	5V1_1W	(ZENER_1W):Diodo Zener 5V1 1W (come diodi rettificatori da 1A)	DIZ5V11W	
18	11	D4,D5,D6,D16,D19,D25,D26,	BAV99	(SOT-23):Diodo SMD SOT-23	DISBAV99	
		D27,D28,D29,D30				
19	16	D7,D8,D9,D10,D11,D12,D13,	HSMS2800	(SOT-23):Diodo SMD SOT-23	DISHSMS2800	
		D14,D15,D17,D18,D20,D21,				
		D22,D23,D24				
20	11	FIX1,FIX2,FIX3,FIX4,FIX5,	FIX35	(FIX35):Non è un componente		
		FIX6,FIX7,FIX8,FIX9,				
		FIX10,FIX11				
21	1	F1	2A	(FHOLDER_C):Portafusibile a Clip per Fuse 5x20 2A da c.s.	PFS5X20CS+FUS5X20RP2+COPPFS5X20CS	
22	2	F3,F2	DSS310	(DSS310):Filtro MURATA mod. DSS310	FILTRO ANTIDIST.EMI MURATA 22NF 50V	
23	1	IS1	4N25	(DIP6_L):Opto su zoccolo 8pins	LED4N26	
24	1	JP1	STRIP_10+10	(STRIP10X2):Strip 10+10 poli passo 2.54 Femmina	CNTSTF10DDB	
25	1	JP2	STRIP_13+13	(STRIP13X2):Strip 13+13 poli passo 2.54 Femmina	CNTSTF13DDB	
26	1	JP3	LUMBERG_6PV	(LUMBERG_6PV):Connettore tipo Lumberg 6 poli verticale	CNT25MSF6	
27	1	JP4	CN16_FLAT	(FLAT16V):Conn. per Flat Cable 16pp Vert	CNTMCS16A	
28	1	JP5	CN40_FLAT	(FLAT40V):Conn. per Flat Cable 40pp Vert	CNTMCS40A	**NOTA1**
29	1	JP6	CN10_FLAT	(FLAT10V):Conn. per Flat Cable 10pp Vert	CNTMCS10A	
30	4	PD1,PD2,PD11,PD12	PAD1A	(PAD1A):Non è un componente		
31	8	PD3,PD4,PD5,PD6,PD7,PD8,	PAD10A	(PAD10A):Non è un componente		
		PD9,PD10				
32	1	Q1	BC847	(SOT-23):Transistor SMD	TRNBC847	
33	1	Q2	BC857	(SOT-23):Transistor SMD	TRNBC857	
34	36	R1,R2,R3,R4,R6,R7,R8,R9,	1k00	(0805/0603):Componente SMD 1% size 0805 o 0603	RCH085F0001K	
		R18,R30,R39,R53,R62,				
		R71,R80,R89,R94,R96,R97,				
		R98,R116,R119,R130,R132,				
		R136,R150,R154,R156,R164,				
		R166,R174,R176,R182,R183,				
		R186,R187				
35	24	R5,R20,R21,R31,R32,R40,	100R0	(0805/0603):Componente SMD 1% size 0805 o 0603	RCH085F0100H	
		R41,R54,R55,R63,R64,R72,				
		R73,R81,R82,R90,R91,R100,				
		R106,R126,R147,R155,				
		R175,R185				
36	2	R11,R10	10_1/2W	(R1/2W):Resistenza 10 Ohm 1/2W	RSC1/2J0010H	
37	2	R12,R13	RXE110	(RXE110):PTC (Fusibile Autoripristinante)	FUSAUTRX110A	
38	11	R14,R26,R35,R48,R58,R67,	51R0	(0805/0603):Componente SMD 1% size 0805 o 0603	RCH085F0051H	
		R76,R85,R158,R168,R178				
39	57	R15,R16,R17,R23,R27,R28,	10k0	(0805/0603):Componente SMD 1% size 0805 o 0603	RCH085F0010K	
		R29,R36,R37,R38,R49,R50,				
		R51,R59,R60,R61,R68,R69,				
		R70,R77,R78,R79,R86,R87,				
		R88,R95,R105,R108,R109,				
		R111,R112,R115,R120,R121,				
		R122,R123,R125,R127,R134,				
		R135,R137,R138,R140,R141,				
		R142,R145,R149,R153,R160,				
		R162,R163,R169,R170,R173,				
		R180,R165,R25				
40	15	R19,R22,R33,R42,R56,R65,	100k0	(0805/0603):Componente SMD 1% size 0805 o 0603	RCH085F0100K	
		R74,R83,R92,R102,R107,				
		R110,R139,R143,R144				
41	8	R24,R34,R43,R57,R66,R75,	10R0	(0805/0603):Componente SMD 1% size 0805 o 0603	RCH085F0010H	
		R84,R93				
42	4	R44,R45,R46,R47	20k0_1/4W	(R1/4W):Resistenza 20K 1% 1/4W	RSM1/4F0020K	
43	1	R52	422R	(0805/0603):Componente SMD 1% size 0805 o 0603	RCH085F0422H	
44	1	R99	2k2	(0805/0603):Componente SMD 1% size 0805 o 0603	RCH126F002K2	
45	5	R101,R152,R159,R172,R179	47k0	(0805/0603):Componente SMD 1% size 0805 o 0603	RCH085F0047K	
46	1	R103	10k_1/4W	(R1/4W):Resistenza 10K 5% 1/4W	RSM1/4F0010K	
47	1	R104	56k0	(0805/0603):Componente SMD 1% size 0805 o 0603	RCH085F0056K	
48	2	R113,R221	4k7	(0805/0603):Componente SMD 1% size 0805 o 0603	RCH126F004K7	
49	1	R114	2k7	(0805/0603):Componente SMD 1% size 0805 o 0603	RCH085F002K7	
50	2	R117,R118	20k0	(0805/0603):Componente SMD 1% size 0805 o 0603	RCH085F0020K	
51	2	R128,R124	5k90	(0805/0603):Componente SMD 1% size 0805 o 0603	RCH085F005K9	
52	1	R129	33k2	(0805/0603):Componente SMD 1% size 0805 o 0603	RCH085F0033K	
53	1	R131	16k9	(0805/0603):Componente SMD 1% size 0805 o 0603	RCH085F016K9	
54	7	R133,R151,R157,R167,R177,	470R	(0805/0603):Componente SMD 1% size 0805 o 0603	RCH085F0470H	
		R184,R188				
55	1	R146	18k7	(0805/0603):Componente SMD 1% size 0805 o 0603	RCH085F018K7	
56	1	R148	Rx	Non Installata		
57	3	R161,R171,R181	0R	(0805/0603):Componente SMD size 0805 o 0603	RCH085F0000H	
58	32	R189,R190,R191,R192,R193,	820R	(0805/0603):Componente SMD 5% size 0805	RCH085J0825H	
		R194,R195,R196,R197,R198,				
		R199,R200,R201,R202,R203,				
		R204,R205,R206,R207,R208,				
		R209,R210,R211,R212,R213,				
		R214,R215,R216,R217,R218,				
		R219,R220				
59	8	SH1,SH2,SH3,SH4,SH5,SH6,	0.005R	SHUNT (2.5W) p.15.2, larg. 3, fori diam. 1.9 0.005 Ohm	RSH03W0H005	
		SH7,SH8				
60	8	TP1,TP2,TP3,TP4,TP5,TP6,	TP	(TP2.54):Non è un componente		
		TP7,TP8				
61	17	TR1,TR2,TR3,TR4,TR5,TR6,	50k_	(TRIM87W):Trimmer resistivo multigiri reg. in testa	RVT3296WK050	
		TR7,TR8,TR9,TR10,TR11,				
		TR12,TR13,TR14,TR15,TR16,				
		TR17				
62	3	TR18,TR19,TR20	1k_	(TRIM87W):Trimmer resistivo multigiri reg. in testa	RVT3296WK001	
63	1	U1	LM7812/TO220_90B	(78XX/TO220_90BOT)	CIL7812P	
64	1	U2	LM7912/TO220_90B	(79XX/TO220_90BOT)	CIL7912PCIS	
65	1	U3	LM7805/TO220_90B	(78XX/TO220_90BOT)	CIL7805P	
66	8	U4,U6,U7,U8,U9,U11,U12,	INA146	(SO-8):IC SMD 8pins	CILINA146SMD	
		U13				
67	14	U5,U10,U15,U16,U18,U19,	TL074	(TL074/SO14): IC SMD 14pins	CILTL074SMD	
		U21,U22,U23,U24,U25,U26,				
		U27,U28				
68	2	U14,U20	TL072	(TL072/SO8):IC SMD 8pins	CILTL072SMD	
69	1	U17	LM50C_SMD	(SOT-23):IC Sonda termica LM50C SMD	CILLM50C	
70	1	CS1	CSMTPRTPJ2K2	Circuito stampato	CSMTPRTPJ2K2	
	1			Zoccolo x integrato a 6 pin	ZIN06TORNS	

NOTA1 Mettere a massa il pin 34 grattando via il solder resist che ricopre tutto il ground che sta intorno

8.15.1 Adjustments

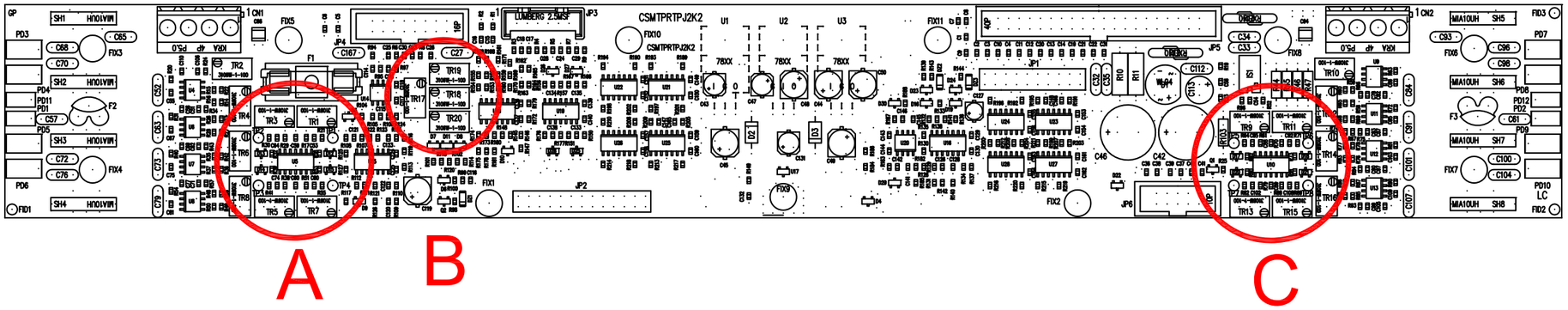

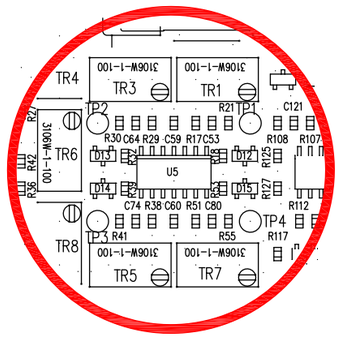

A

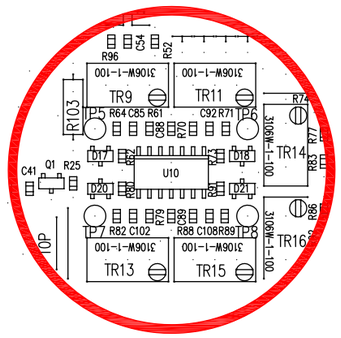

C

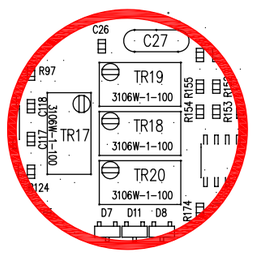

B

Ref.	Trimmer	Function
A	TR1	Adjusting current reading Pallet mosfet 1
A	TR3	Adjusting current reading Pallet mosfet 2
A	TR5	Adjusting current reading Pallet mosfet 3
A	TR7	Adjusting current reading Pallet mosfet 4
C	TR9	Adjusting current reading Pallet mosfet 5
C	TR11	Adjusting current reading Pallet mosfet 6
C	TR13	Adjusting current reading Pallet mosfet 7
C	TR15	Adjusting current reading Pallet mosfet 8
B	TR17	Adjusting current reading Pallet driver
B	TR18	Adjusting Reading FWD power, output from the module
B	TR19	Adjusting Reading RFL power, output from the module
B	TR20	Adjusting Reading FWD power, input to the splitter

8.16 8 way splitter (SLIN0388R01V01)

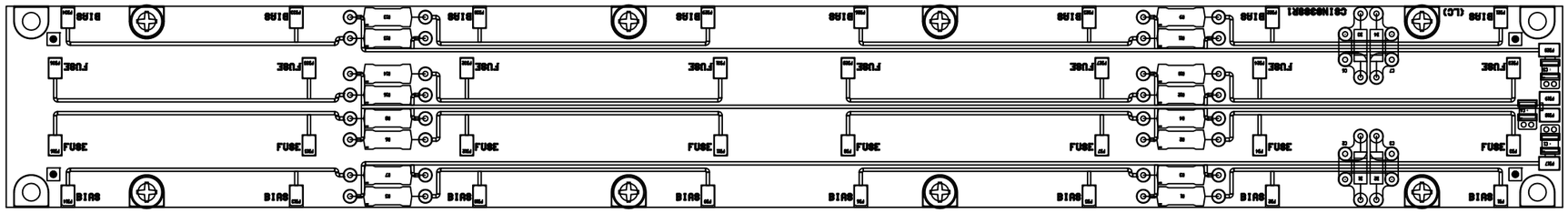

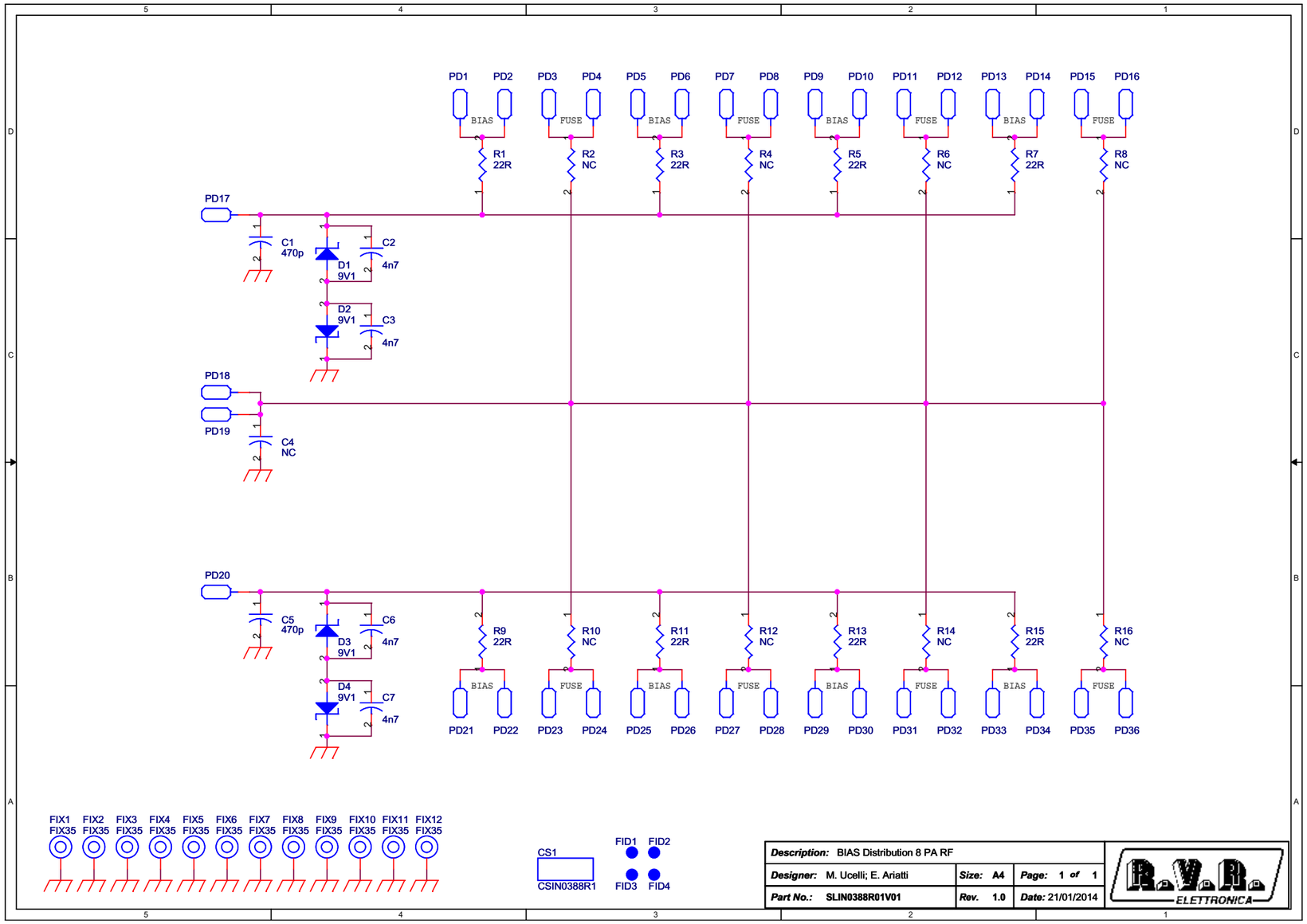

BIAS Distribution 8 PA RF
SLIN0388R01V01
21/01/2014
Rev. 1.0
46
M. Ucelli / E. Ariatti

Item	Qty	Reference	Part	Description
1	1	CS1	CSIN0388R1	Circuito stampato
2	2	C1,C5	470p	Cond. SMD 1212 HQ
3	4	C2,C3,C6,C7	4n7	Cond. ceramico p 5mm
4	1	C4	NC	Cond. SMD 1212 HQ
5	4	D1,D2,D3,D4	9V1	1W Zener Diode
6	4	FID1,FID2,FID3,FID4	FID	Fiducial CS
7	12	FIX1,FIX2,FIX3,FIX4,FIX5,FIX6, FIX7,FIX8,FIX9,FIX10,FIX11, FIX12	FIX35	Foro fissaggio 3.5mm
8	36	PD1,PD2,PD3,PD4,PD5,PD6, PD7,PD8,PD9,PD10,PD11, PD12,PD13,PD14,PD15,PD16, PD17,PD18,PD19,PD20,PD21, PD22,PD23,PD24,PD25,PD26, PD27,PD28,PD29,PD30,PD31, PD32,PD33,PD34,PD35,PD36	PAD	Pad a saldare
9	8	R1,R3,R5,R7,R9,R11,R13, R15	22R	Res. Strato Metallico 2W
10	8	R2,R4,R6,R8,R10,R12,R14,R16	NC	Res. 1/2W 10k

8.17 Bias distribution 8 PA RF (SLSP0387R01V01)

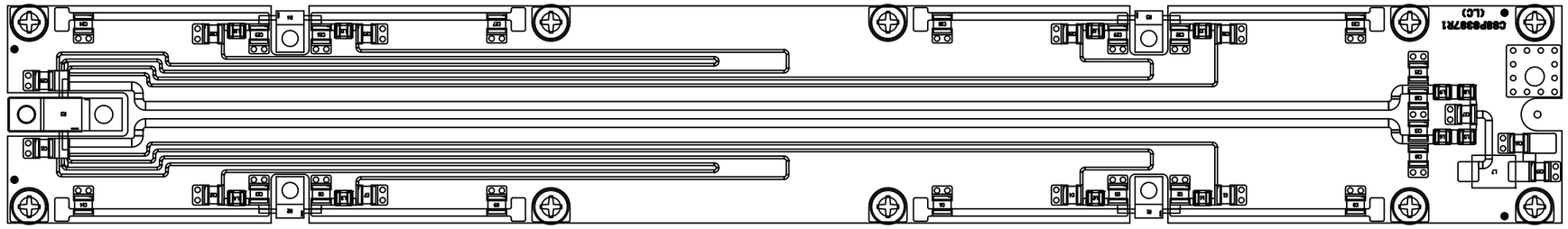

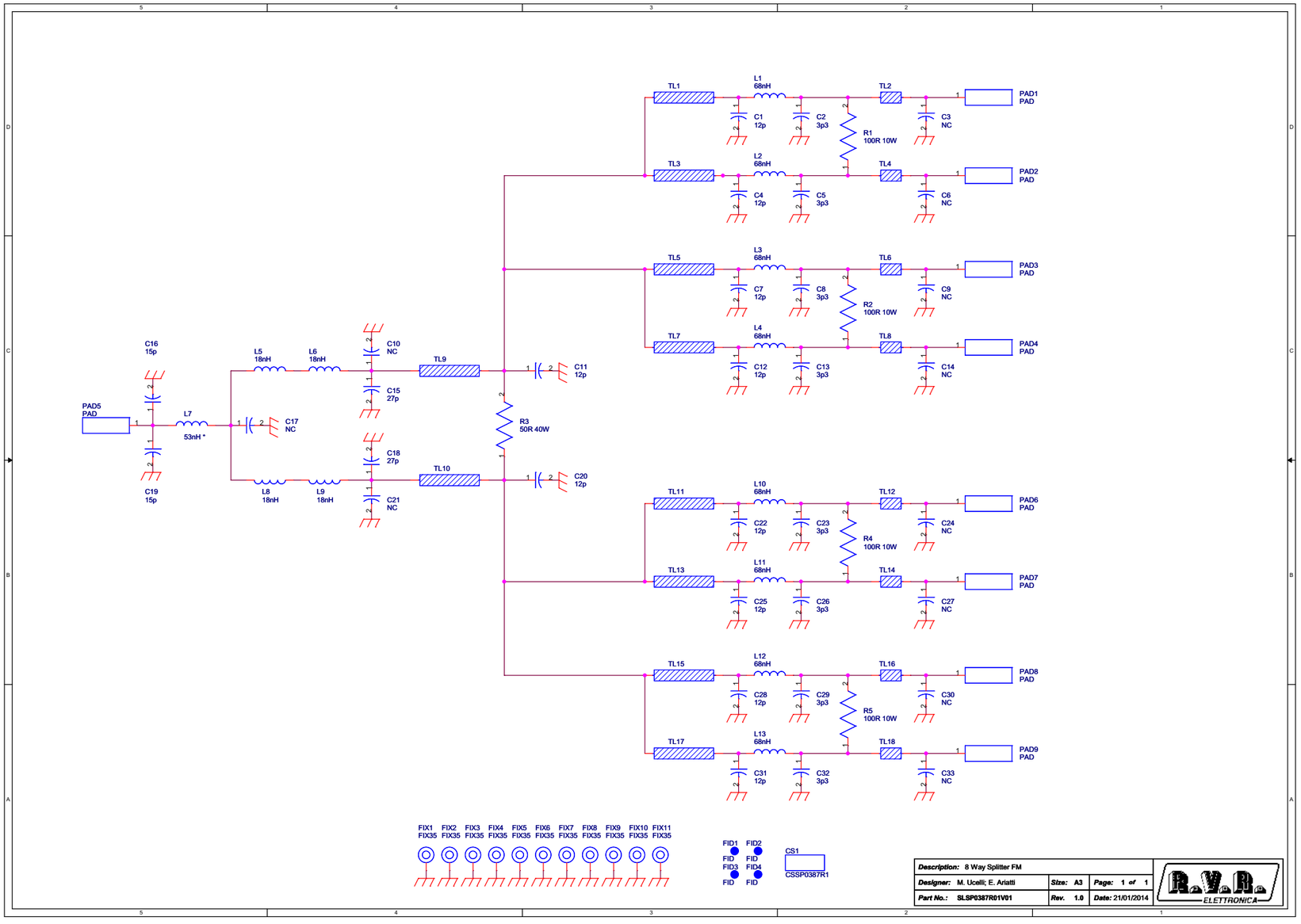

8 Ways Splitter FM
SLSP0387R01V01
Revision: 1.0
21/01/2014
46
Mauro Ucelli / E. Ariatti

Item	Qty	Reference	Part	Description
1	1	CS1	CSSP0387R1	Circuito stampato
2	10	C1,C4,C7,C11,C12,C20,C22,C25,C28,C31	12p	Cond. SMD 1212 HQ
3	8	C2,C5,C8,C13,C23,C26,C29,C32	3p3	Cond. SMD 1212 HQ
4	11	C3,C6,C9,C10,C14,C17,C21,C24,C27,C30,C33	NC	Cond. SMD 1212 HQ
5	2	C15,C18	27p	Cond. SMD 1212 HQ
6	2	C16,C19	15p	Cond. SMD 1212 HQ
7	4	FID1,FID2,FID3,FID4	FID	Fiducial CS
8	11	FIX1,FIX2,FIX3,FIX4,FIX5,FIX6,FIX7,FIX8,FIX9,FIX10,FIX11	FIX35	Foro fissaggio 3.5mm
9	8	L1,L2,L3,L4,L10,L11,L12,L13	68nH	Induttanza SMD HQ 2520 (1008)
10	4	L5,L6,L8,L9	18nH	Induttanza SMD HQ 2520 (1008)
11	1	L7	53nH *	4 spire filo rame arg. Φ 1mm, avvolte su Φ 4mm; lunghezza solenoide 5,5mm
12	9	PAD1,PAD2,PAD3,PAD4,PAD5,PAD6,PAD7,PAD8,PAD9	PAD	Pad SMD saldare
13	4	R1,R2,R4,R5	100R 10W	Resistenza KDI 1 fix, 100ohm 10W
14	1	R3	50R 40W	Resistenza KDI 2 fix, 50 ohm 40W
15	10	TL1,TL3,TL5,TL7,TL9,TL10,TL11,TL13,TL15,TL17	TLINE_L	Linea strip CS
16	8	TL2,TL4,TL6,TL8,TL12,	TLINE_S	Linea strip CS

8.18 FWD e RFL Power Meter board (SL042MT1501)

W1 LINK CONFIGURATION

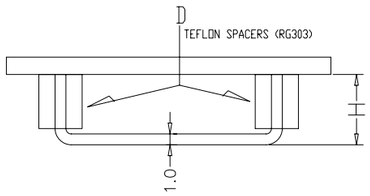

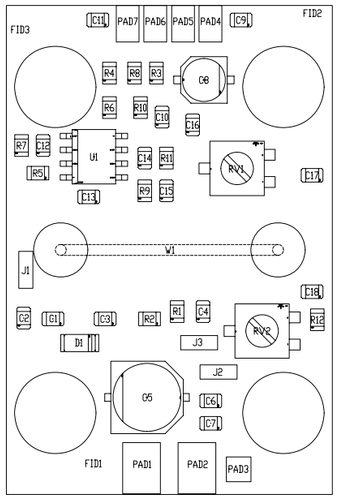

J1: 88-108 MHz LINEARITY
J2: LIGHT STABILIZER DELAY SYSTEM
J3: HEAVY STABILIZER DELAY SYSTEM
PAD1: GND (PASSIVE RF MEASUREMENT)
PAD2: SIGNAL (PASSIVE RF MEASUREMENT)
PAD3: SIGNAL GND (PASSIVE RF MEASUREMENT)
PAD4: +12VCC (AMPLIF. RF MEASUREMENT)
PAD5: SIGNAL GND (AMPLIF. RF MEASUREMENT)
PAD6: GND (AMPLIF. RF MEASUREMENT)
PAD7: SIGNAL (AMPLIF. RF MEASUREMENT)
RV1: DIRECTIVITY ADJUSTMENT
RV2: NORMALIZATION LEVEL

CONFIGURATIONS DETAIL

CARD CODE	H link W1 (mm)	D spacers W1	Jumper J1	Jumper J2	Jumper J3
SL042MT1001					
SL042MT1101	5.3		X		
SL042MT1201	4		X		
SL042MT1301	7.6		X		
SL042MT1401	8.5	X	X		X
SL042MT1501	4.5		X		

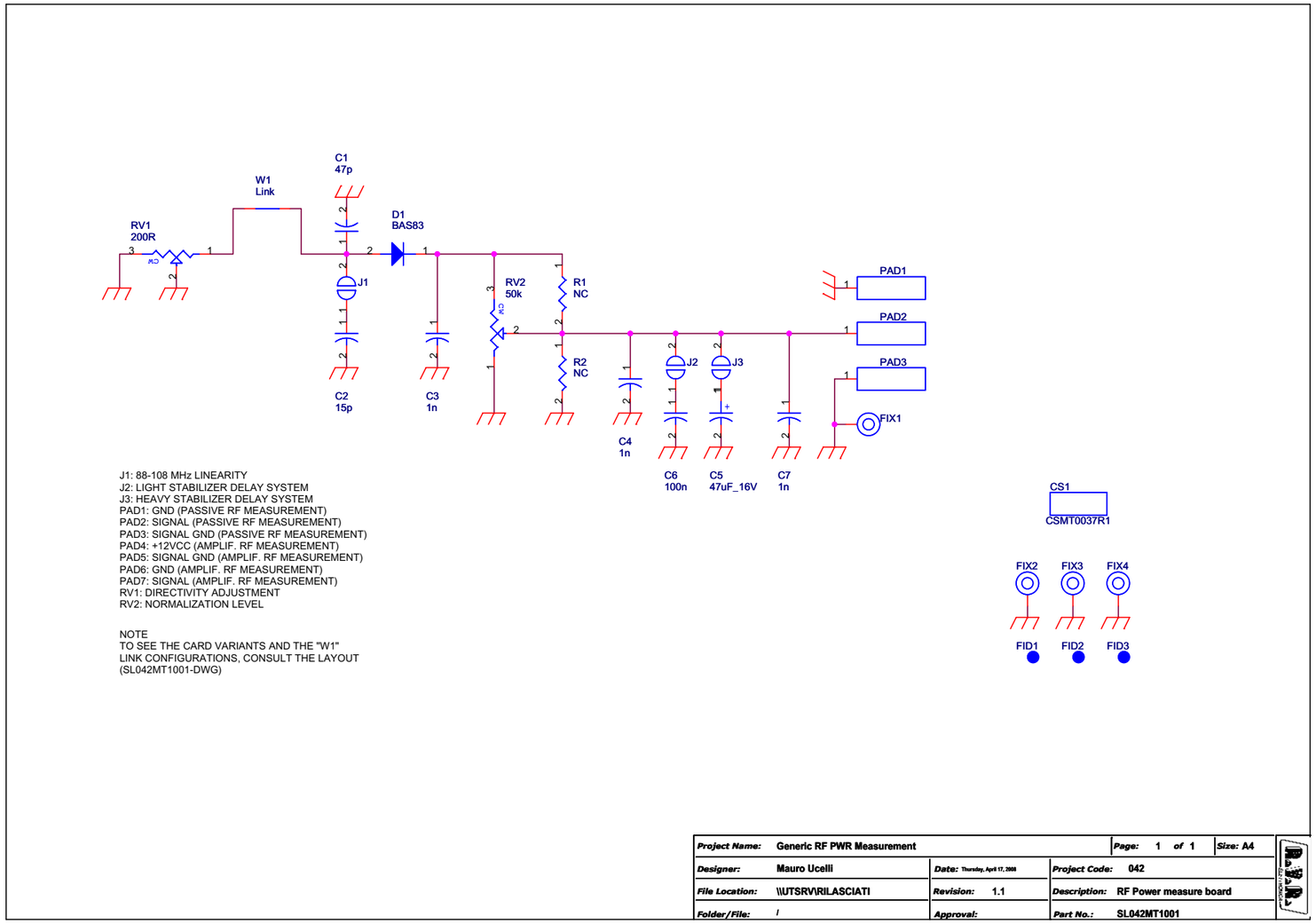

RF Power measure board
SL042MT1001
Revision: 1.1
Generic RF PWR Measurement

Item	Quantity	Reference	Part	Description
1	1	CS1	CSMT0037R1	Printed Circuit Board
2	1	C1	47p	SMD 0805 COG Capacitor
3	1	C2	15p	SMD 0805 COG Capacitor
4	3	C3,C4,C7	1n	SMD 0805 Capacitor
5	1	C5	47uF_16V	Elect. SMD d. 6.3mm Cap.
6	1	C6	100n	SMD 0805 Capacitor
7	1	D1	BAS83	MINIMELF SMD Diode
8	3	FID1,FID2,FID3	FID	
9	4	FIX1,FIX2,FIX3,FIX4	FIX35	Fixing Hole 3.5mm
10	3	J1,J2,J3	JSMD	SMD Pad to solder
11	3	PAD1,PAD2,PAD3	PAD	
12	1	RV1	200R	Trimmer SMD
13	1	RV2	50k	Trimmer SMD
14	2	R1,R2	NC	SMD 0805 Res.
15	1	W1	Link	Wire to solder

8.19 Out board (SLOP0338R2)

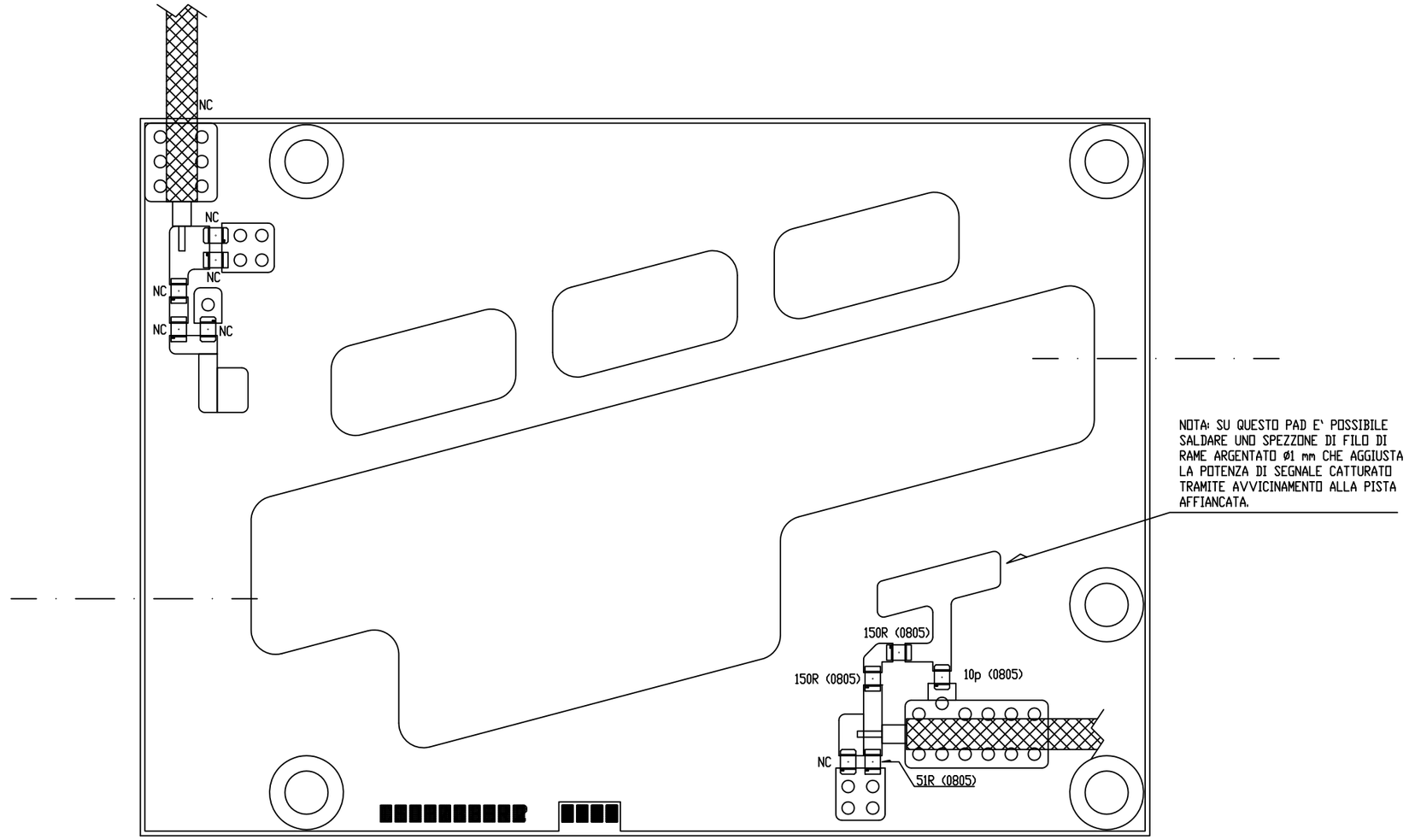

Item	Quan-tity	Reference	Part
1	2	R1, R2	150R
2	1	R3	51R
3	1	C1	10pF
4	1	P1	PAG2003MS

8.20 Amplifier modules - Pallet Mosfet (KKFIN237H)*

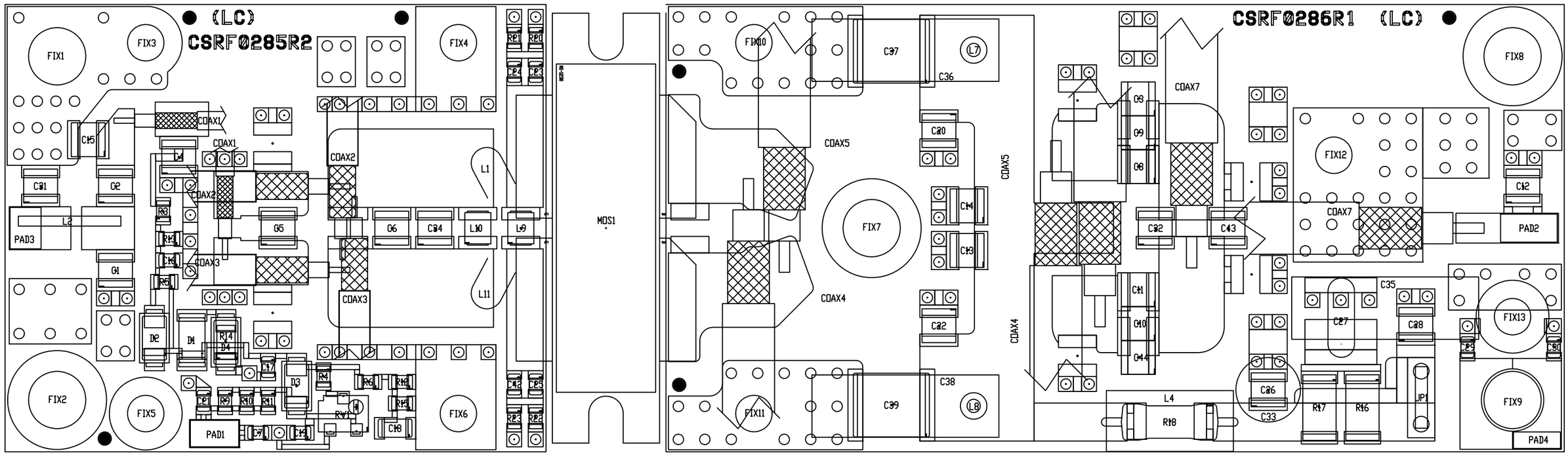

* In the event of a request for replacement, check the version of the pallet RF, on the yellow label on the back of the module

Pallet type	Mosfet type (to cosult datasheet)
KKFIN237H	MRF6VP11KH
KKFIN237L	MRFE6VP61K25H
KKFIN237N	MRFE6VP61K25H

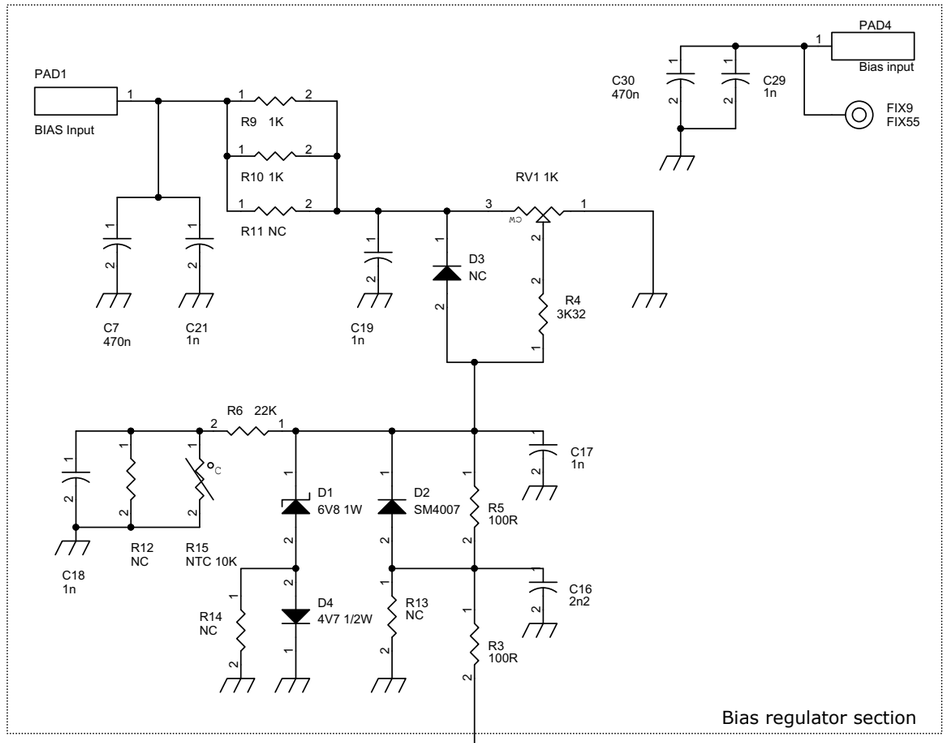

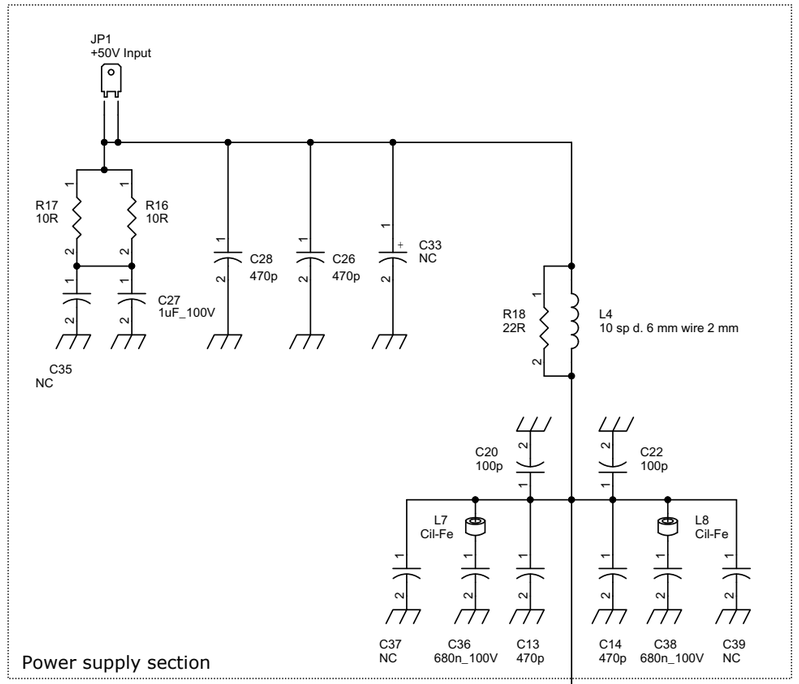

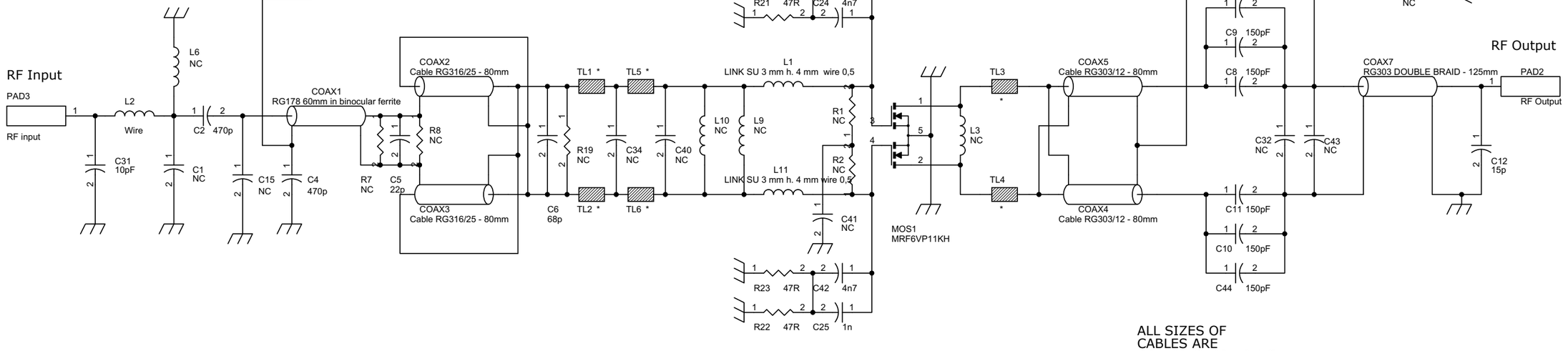

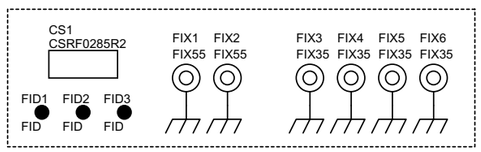

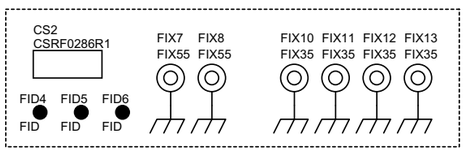

Nome Progetto: Exciter High Efficienty			**Pagina:** 1 **di** 1 **Size:** A3
Autore: L. Gasperini / A. Tommasi	**Data:** 26/08/2013	**Codice Progetto:** 237	
Nome PC in Rete: \\RVRUT\Rilasciati\	**Revisione:** 1.4	**Nome Parte:** PALLET FM 800 W	
File/Cartella: /	**Autorizzazione:**	**Codice:** SL237RF1001	

PALLET FM 800 W Revised: 26/08/2013
SL237RF1001 Revision: 1.4
Exciter High Efficienty
237
L. Gasperini / A. Tommasi

Item	Quantity	Reference	Part
1	1	COAX1	RG178 60mm in binocular ferrite
2	2	COAX2, COAX3	Cable RG316/25 - 80mm
3	2	COAX5, COAX4	Cable RG303/12 - 80mm
4	1	COAX7	RG142 DOUBLE BRAIDING - 125m
5	1	CS1	CSRF0285R2
6	1	CS2	CSRF0286R1
7	1	C1	NC
8	2	C2, C4	470p
9	4	C13, C14, C26, C28	470p
10	1	C30	470n
11	1	C5	22p
12	1	C6	68p
13	2	C7	470n
14	6	C3, C44, C8, C9, C10, C11	150pF
15	1	C12	15p
16	5	C15, C32, C34, C40, C43	NC
17	1	C16	2n2
18	5	C17, C19, C21, C23, C25	1n
19	1	C18	1n
20	2	C22, C20	100p
21	2	C42, C24	4n7
22	1	C27	1uF_100V
23	1	C31	10pF
24	1	C29	1n
25	3	C36, C38	680n_100V
26	2	C37, C39	NC
27	1	C41	NC
28	1	D1	6V8 1W
29	1	D2	SM4007
30	1	D3	NC
31	1	D4	4V7 1/2W
32	6	FID1, FID2, FID3, FID4, FID5, FID6	FID
33	5	FIX1, FIX2, FIX7, FIX8, FIX9	FIX55
34	8	FIX3, FIX4, FIX5, FIX6, FIX10, FIX11, FIX12, FIX13	FIX35
35	1	JP1	+50V Input
36	2	L11, L1	LINK SU 3 mm h. 4 mm wire 0,5
37	1	L2	Wire
38	1	L3	NC
39	1	L4	10 sp d. 6 mm wire 2 mm
40	2	L5, L9	NC
41	1	L6	NC
42	2	L7, L8	Cil-Fe
43	1	L10	NC
44	1	MOS1	MRF6VP11KH
45	2	PAD4, PAD1	BIAS Input
46	1	PAD2	RF Output
47	1	PAD3	RF input
48	1	RV1	1K
49	5	R1, R2, R7, R8, R19	NC
50	2	R3, R5	100R
51	1	R4	3K32
52	1	R6	22K
53	2	R10, R9	1K
54	3	R11, R12, R13	NC
55	1	R14	NC
56	1	R15	NTC 10K
57	2	R17, R16	10R
58	1	R18	22R
59	4	R20, R21, R22, R23	47R
60	6	TL1, TL2, TL3, TL4, TL5, TL6	*
61	1		Ferrite balun

8.20.1 Datasheet of MRF6VP11KH

Freescale Semiconductor
Technical Data

Document Number: MRF6VP11KH
Rev. 8, 9/2012

RoHS

RF Power Field Effect Transistors

N-Channel Enhancement-Mode Lateral MOSFETs

Designed primarily for pulse wideband applications with frequencies up to 150 MHz. Devices are unmatched and are suitable for use in industrial, medical and scientific applications.

- Typical Pulse Performance at 130 MHz: V_{DD} = 50 Volts, I_{DQ} = 150 mA, P_{out} = 1000 Watts Peak (200 W Avg.), Pulse Width = 100 μsec, Duty Cycle = 20%
  - Power Gain — 26 dB
  - Drain Efficiency — 71%
- Capable of Handling 10:1 VSWR, @ 50 Vdc, 130 MHz, 1000 Watts Peak Power

Features

- Characterized with Series Equivalent Large-Signal Impedance Parameters
- CW Operation Capability with Adequate Cooling
- Qualified Up to a Maximum of 50 V_{DD} Operation
- Integrated ESD Protection
- Designed for Push-Pull Operation
- Greater Negative Gate-Source Voltage Range for Improved Class C Operation
- In Tape and Reel. R6 Suffix = 150 Units, 56 mm Tape Width, 13 inch Reel. R5 Suffix = 50 Units, 56 mm Tape Width, 13 Inch Reel.

MRF6VP11KHR6
MRF6VP11KGSR5

1.8-150 MHz, 1000 W, 50 V
LATERAL N-CHANNEL
BROADBAND
RF POWER MOSFETs

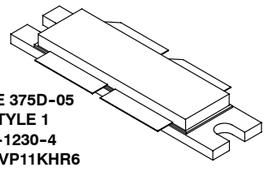

CASE 375D-05
STYLE 1
NI-1230-4
MRF6VP11KHR6

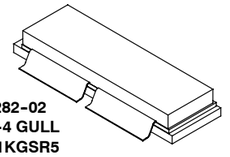

CASE 2282-02
NI-1230S-4 GULL
MRF6VP11KGSR5

PARTS ARE PUSH-PULL

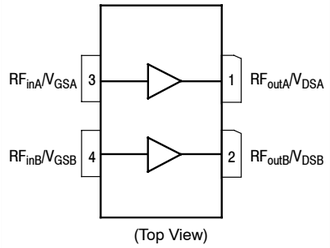

(Top View)

Figure 1. Pin Connections

Table 1. Maximum Ratings

Rating	Symbol	Value	Unit
Drain-Source Voltage	V_{DSS}	-0.5, +110	Vdc
Gate-Source Voltage	V_{GS}	-6.0, +10	Vdc
Storage Temperature Range	T_{stg}	-65 to +150	°C
Case Operating Temperature	T_C	150	°C
Operating Junction Temperature (1,2)	T_J	225	°C

Table 2. Thermal Characteristics

Characteristic	Symbol	Value (2,3)	Unit
Thermal Resistance, Junction to Case CW: Case Temperature 67°C, 1000 W CW, 100 MHz	$R_{\theta JC}$	0.13	°C/W
Thermal Impedance, Junction to Case Pulse: Case Temperature 80°C, 1000 W Peak, 100 μsec Pulse Width, 20% Duty Cycle	$Z_{\theta JC}$	0.03	°C/W

1. Continuous use at maximum temperature will affect MTTF.
2. MTTF calculator available at http://www.freescale.com/rf. Select Software & Tools/Development Tools/Calculators to access MTTF calculators by product.
3. Refer to AN1955, *Thermal Measurement Methodology of RF Power Amplifiers.* Go to http://www.freescale.com/rf. Select Documentation/Application Notes - AN1955.

© Freescale Semiconductor, Inc., 2008-2010, 2012. All rights reserved.

freescale

Table 3. ESD Protection Characteristics

Test Methodology	Class
Human Body Model (per JESD22-A114)	2, passes 2000 V
Machine Model (per EIA/JESD22-A115)	A, passes 125 V
Charge Device Model (per JESD22-C101)	IV, passes 2000 V

Table 4. Electrical Characteristics (T_A = 25°C unless otherwise noted)

Characteristic	Symbol	Min	Typ	Max	Unit
Off Characteristics (1)					
Gate-Source Leakage Current (V_{GS} = 5 Vdc, V_{DS} = 0 Vdc)	I_{GSS}	—	—	10	μAdc
Drain-Source Breakdown Voltage (I_D = 300 mA, V_{GS} = 0 Vdc)	$V_{(BR)DSS}$	110	—	—	Vdc
Zero Gate Voltage Drain Leakage Current (V_{DS} = 50 Vdc, V_{GS} = 0 Vdc)	I_{DSS}	—	—	100	μAdc
Zero Gate Voltage Drain Leakage Current (V_{DS} = 100 Vdc, V_{GS} = 0 Vdc)	I_{DSS}	—	—	5	mA
On Characteristics					
Gate Threshold Voltage (1) (V_{DS} = 10 Vdc, I_D = 1600 μAdc)	$V_{GS(th)}$	1	1.63	3	Vdc
Gate Quiescent Voltage (2) (V_{DD} = 50 Vdc, I_D = 150 mAdc, Measured in Functional Test)	$V_{GS(Q)}$	1.5	2.2	3.5	Vdc
Drain-Source On-Voltage (1) (V_{GS} = 10 Vdc, I_D = 4 Adc)	$V_{DS(on)}$	—	0.28	—	Vdc
Dynamic Characteristics (1)					
Reverse Transfer Capacitance (V_{DS} = 50 Vdc ± 30 mV(rms)ac @ 1 MHz, V_{GS} = 0 Vdc)	C_{rss}	—	3.3	—	pF
Output Capacitance (V_{DS} = 50 Vdc ± 30 mV(rms)ac @ 1 MHz, V_{GS} = 0 Vdc)	C_{oss}	—	147	—	pF
Input Capacitance (V_{DS} = 50 Vdc, V_{GS} = 0 Vdc ± 30 mV(rms)ac @ 1 MHz)	C_{iss}	—	506	—	pF

Functional Tests (2,3) (In Freescale Test Fixture, 50 ohm system) V_{DD} = 50 Vdc, I_{DQ} = 150 mA, P_{out} = 1000 W Peak (200 W Avg.), f = 130 MHz, 100 μsec Pulse Width, 20% Duty Cycle

Power Gain	G_{ps}	24	26	28	dB
Drain Efficiency	η_D	69	71	—	%
Input Return Loss	IRL	—	-16	-9	dB

1. Each side of device measured separately.
2. Measurements made with device in push-pull configuration.
3. Measurements made with device in straight lead configuration before any lead forming operation is applied. Lead forming is used for gull wing (GS) parts.

TYPICAL CHARACTERISTICS

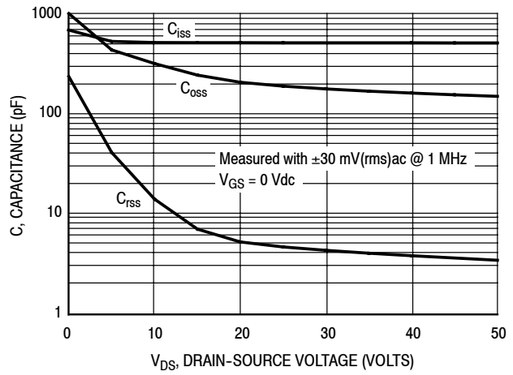

Note: Each side of device measured separately.

Figure 4. Capacitance versus Drain-Source Voltage

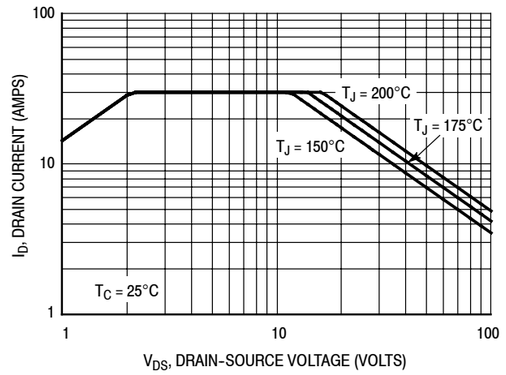

Note: Each side of device measured separately.

Figure 5. DC Safe Operating Area

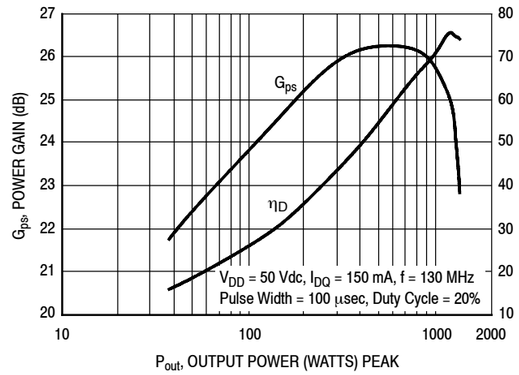

Figure 6. Power Gain and Drain Efficiency versus Output Power

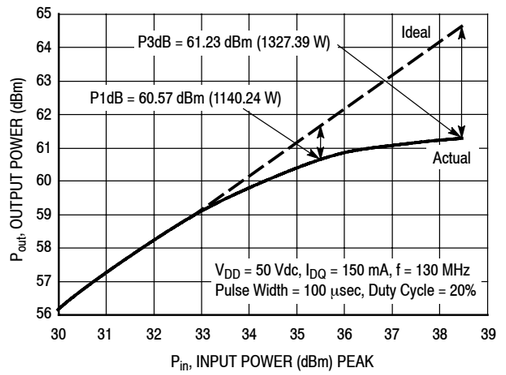

Figure 7. Output Power versus Input Power

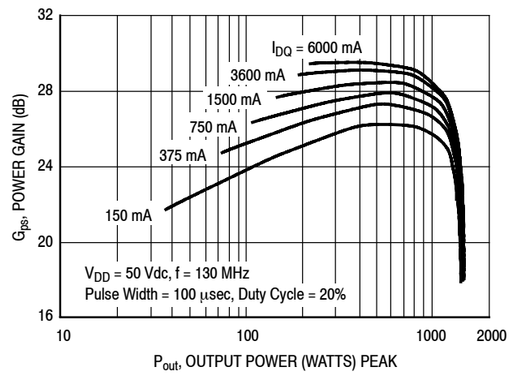

Figure 8. Power Gain versus Output Power

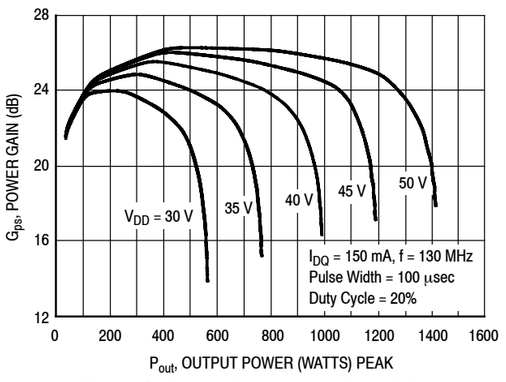

Figure 9. Power Gain versus Output Power

TYPICAL CHARACTERISTICS

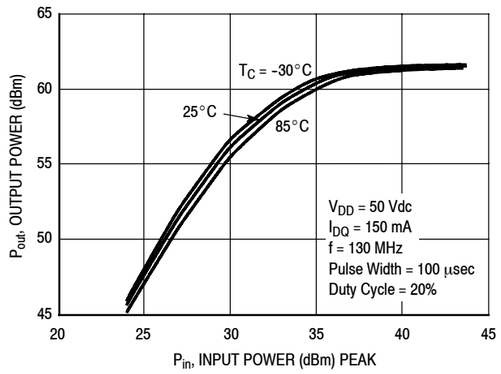

Figure 10. Output Power versus Input Power

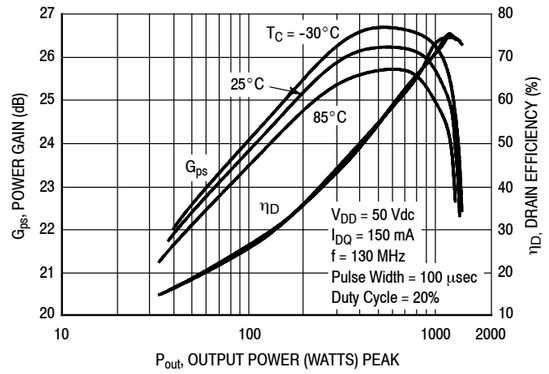

Figure 11. Power Gain and Drain Efficiency versus Output Power

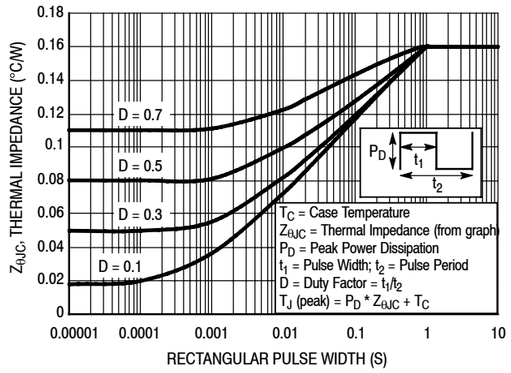

Figure 12. Transient Thermal Impedance

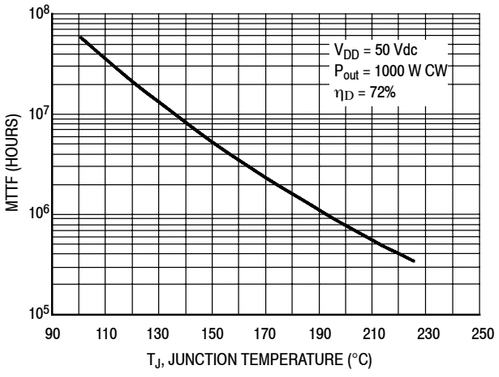

Note: MTTF value represents the total cumulative operating time under indicated test conditions.

MTTF calculator available at freescale.com/RFpower. Select Software & Tools/Development Tools/Calculators to access MTTF calculators by product.

For Pulse applications or CW conditions, use the MTTF calculator referenced above.

Figure 13. MTTF versus Junction Temperature - CW

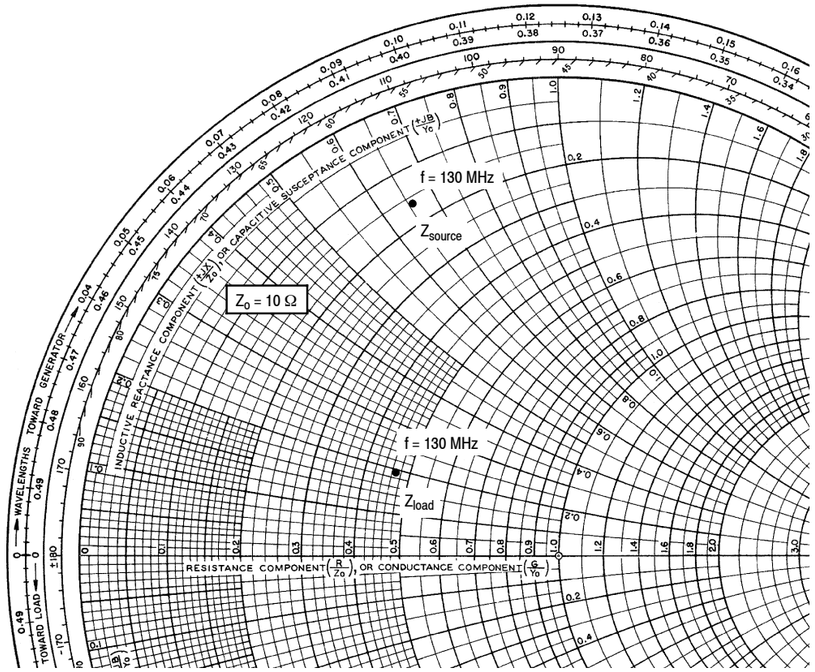

V_{DD} = 50 Vdc, I_{DQ} = 150 mA, P_{out} = 1000 W Peak

f MHz	Z_{source} Ω	Z_{load} Ω
130	1.58 + j6.47	4.6 + j1.85

Z_{source} = Test circuit impedance as measured from gate to gate, balanced configuration.

Z_{load} = Test circuit impedance as measured from drain to drain, balanced configuration.

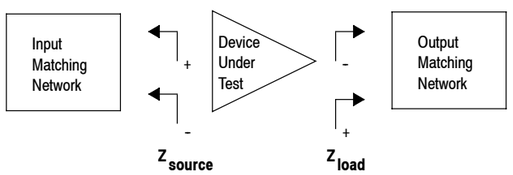

Figure 14. Series Equivalent Source and Load Impedance

PACKAGE DIMENSIONS

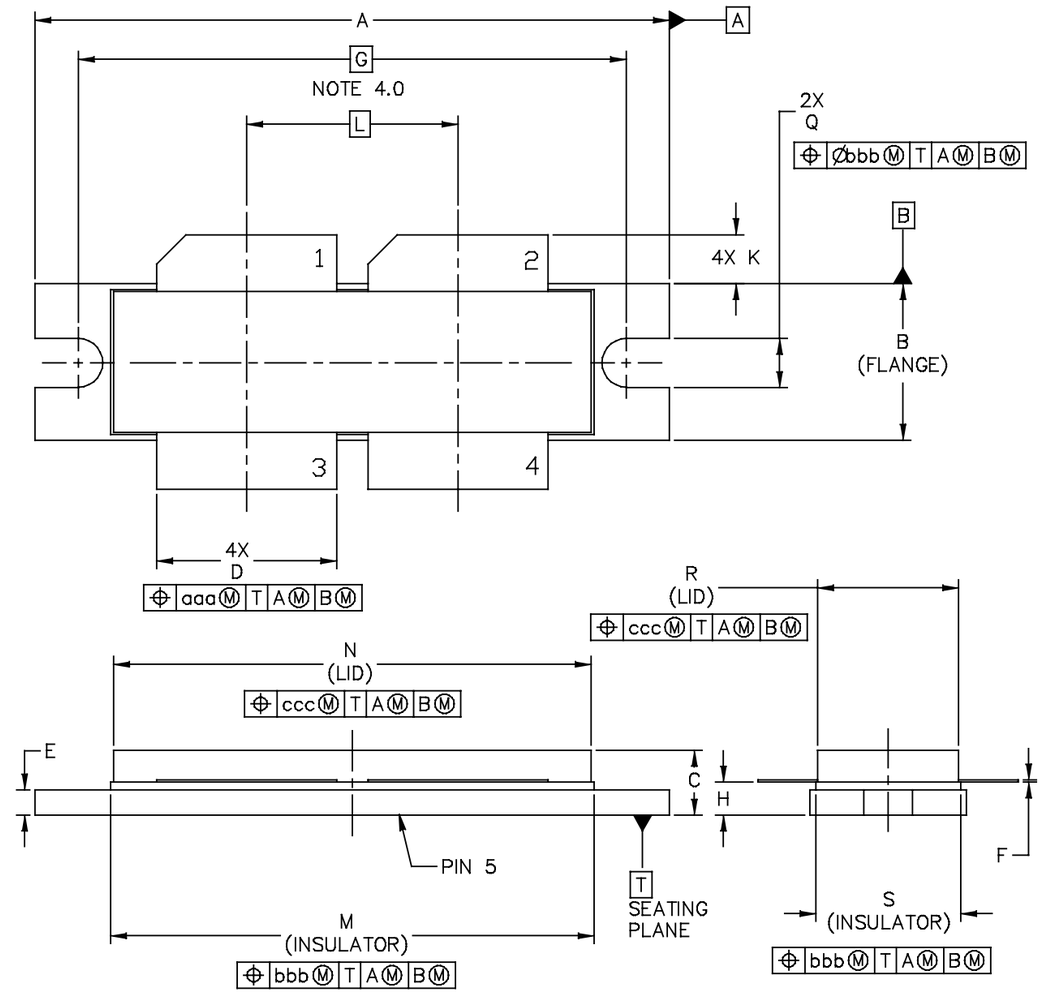

© FREESCALE SEMICONDUCTOR, INC. ALL RIGHTS RESERVED.	MECHANICAL OUTLINE	PRINT VERSION NOT TO SCALE
TITLE: NI−1230	DOCUMENT NO: 98ASB16977C	REV: E
	CASE NUMBER: 375D−05	31 MAR 2005
	STANDARD: NON−JEDEC	

NOTES:

1. 0 INTERPRET DIMENSIONS AND TOLERANCES PER ASME Y14. 5M–1994.

2. 0 CONTROLLING DIMENSION: INCH

3. 0 DIMENSION H IS MEASURED . 030 (0. 762) AWAY FROM PACKAGE BODY.

4. 0 RECOMMENDED BOLT CENTER DIMENSION OF 1. 52 (38. 61) BASED ON M3 SCREW.

STYLE 1:
PIN 1 – DRAIN
2 – DRAIN
3 – GATE
4 – GATE
5 – SOURCE

DIM	INCH MIN	INCH MAX	MILLIMETER MIN	MILLIMETER MAX	DIM	INCH MIN	INCH MAX	MILLIMETER MIN	MILLIMETER MAX
A	1.615	1.625	41.02	41.28	N	1.218	1.242	30.94	31.55
B	.395	.405	10.03	10.29	Q	.120	.130	3.05	3.3
C	.150	.200	3.81	5.08	R	.355	.365	9.01	9.27
D	.455	.465	11.56	11.81	S	.365	.375	9.27	9.53
E	.062	.066	1.57	1.68					
F	.004	.007	0.1	0.18					
G	1.400 BSC		35.56 BSC		aaa	.013		0.33	
H	.082	.090	2.08	2.29	bbb	.010		0.25	
K	.117	.137	2.97	3.48	ccc	.020		0.51	
L	.540 BSC		13.72 BSC						
M	1.219	1.241	30.96	31.52					

© FREESCALE SEMICONDUCTOR, INC. ALL RIGHTS RESERVED.

MECHANICAL OUTLINE	PRINT VERSION NOT TO SCALE

TITLE:	DOCUMENT NO: 98ASB16977C	REV: E
NI–1230	CASE NUMBER: 375D–05	31 MAR 2005
	STANDARD: NON–JEDEC	

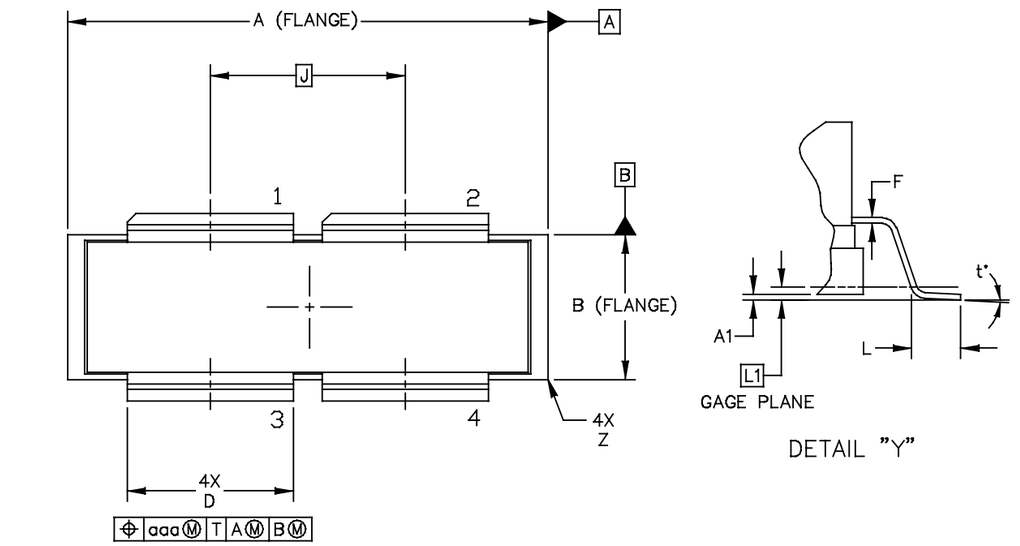

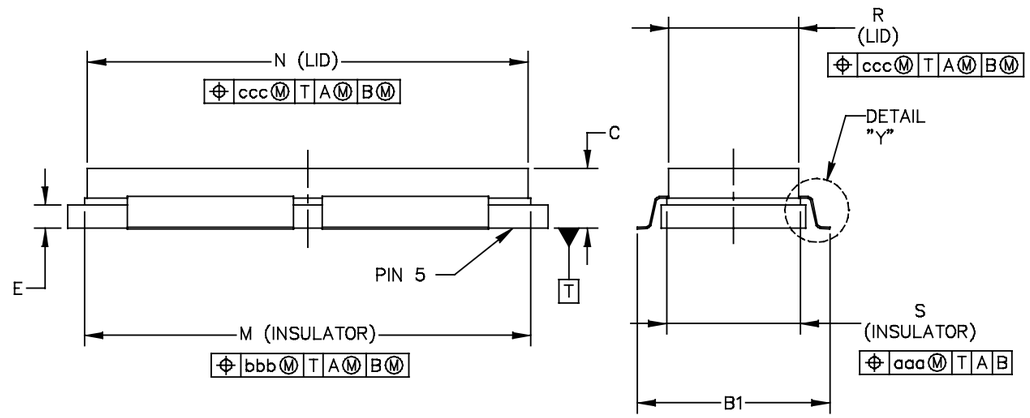

© FREESCALE SEMICONDUCTOR, INC. ALL RIGHTS RESERVED.

MECHANICAL OUTLINE	PRINT VERSION NOT TO SCALE

TITLE:	DOCUMENT NO: 98ASA00459D	REV: O
NI–1230S–4 GULL	CASE NUMBER: 2282–02	10 AUG 2012
	STANDARD: NON–JEDEC	

NOTES:

1. INTERPRET DIMENSIONS AND TOLERANCES PER ASME Y14.5M–1994.
2. CONTROLLING DIMENSION: INCH
3. DIMENSION A1 IS MEASURED WITH REFERENCE TO DATUM T. THE POSITIVE VALUE IMPLIES THAT THE PACKAGE BOTTOM IS HIGHER THAN THE LEAD BOTTOM.

DIM	INCHES MIN	INCHES MAX	MILLIMETERS MIN	MILLIMETERS MAX	DIM	INCHES MIN	INCHES MAX	MILLIMETERS MIN	MILLIMETERS MAX
A	1.265	1.275	32.13	32.39	R	.355	.365	9.02	9.27
A1	–.001	.011	–0.03	0.28	S	.365	.375	9.27	9.53
B	.395	.405	10.03	10.29	Z	R.000	R.040	R0.00	R1.02
B1	.564	.574	14.32	14.58	t°	0°	8°	0°	8°
C	.150	.200	3.81	5.08					
D	.455	.465	11.56	11.81	aaa	.013		0.33	
E	.062	.066	1.57	1.68	bbb	.010		0.25	
F	.004	.007	0.10	0.18	ccc	.020		0.51	
J	.540 BSC		13.72 BSC						
L	.038	.046	0.97	1.17					
L1	.01 BSC		0.25 BSC						
M	1.219	1.241	30.96	31.52					
N	1.218	1.242	30.94	31.55					

© FREESCALE SEMICONDUCTOR, INC. ALL RIGHTS RESERVED.

MECHANICAL OUTLINE	PRINT VERSION NOT TO SCALE	
TITLE: NI–1230S–4 GULL	DOCUMENT NO: 98ASA00459D	REV: O
	CASE NUMBER: 2282–02	10 AUG 2012
	STANDARD: NON–JEDEC	

PRODUCT DOCUMENTATION AND SOFTWARE

Refer to the following documents to aid your design process.

Application Notes

- AN1955: Thermal Measurement Methodology of RF Power Amplifiers

Engineering Bulletins

- EB212: Using Data Sheet Impedances for RF LDMOS Devices

Software

- Electromigration MTTF Calculator
- RF High Power Model

For Software, do a Part Number search at http://www.freescale.com, and select the “Part Number” link. Go to the Software & Tools tab on the part’s Product Summary page to download the respective tool.

REVISION HISTORY

The following table summarizes revisions to this document.

Revision	Date	Description
0	Jan. 2008	• Initial Release of Data Sheet
1	Apr. 2008	• Corrected description and part number for the R1 resistor and updated R2 resistor to latest RoHS compliant part number in Table 5, Test Circuit Component Designations and Values, p. 3. • Added Fig. 12, Maximum Transient Thermal Impedance, p. 6
2	July 2008	• Added MTTF CW graph, Fig. 13, MTTF versus Junction Temperature, p. 6
3	Sept. 2008	• Added Note to Fig. 4, Capacitance versus Drain–Source Voltage, to denote that each side of device is measured separately, p. 5 • Updated Fig. 5, DC Safe Operating Area, to clarify that measurement is on a per–side basis, p. 5 • Corrected Fig. 13, MTTF versus Junction Temperature – CW, to reflect the correct die size and increased the MTTF factor accordingly, p. 6 • Corrected Fig. 14, MTTF versus Junction Temperature – Pulsed, to reflect the correct die size and increased the MTTF factor accordingly, p. 6
4	Dec. 2008	• Fig. 15, Series Equivalent Source and Load Impedance, corrected Z_{source} copy to read “Test circuit impedance as measured from gate to gate, balanced configuration” and Z_{load} copy to read “Test circuit impedance as measured from drain to drain, balanced configuration”, p. 7
5	July 2009	• Added 1000 W CW thermal data at 100 MHz to Thermal Characteristics table, p. 1 • Changed “EKME630ELL471MK25S” part number to “MCGPR63V477M13X26–RH”, changed R1 Description from “1 KΩ, 1/4 W Axial Leaded Resistor” to “1 KΩ, 1/4 W Carbon Leaded Resistor” and “CMF601000R0FKEK” part number to “MCCFR0W4J0102A50”, Table 5, Test Circuit Component Designations and Values, p. 3 • Corrected Fig. 13, MTTF versus Junction Temperature – CW, to reflect change in Drain Efficiency from 70% to 72%, p. 6 • Added Electromigration MTTF Calculator and RF High Power Model availability to Product Documentation, Tools and Software, p. 20
6	Dec. 2009	• Device frequency range improved from 10–150 MHz to 1.8–150 MHz, p. 1 • Reporting of pulsed thermal data now shown using the $Z_{\theta JC}$ symbol, Table 2. Thermal Characteristics, p. 1
7	Apr. 2010	• Operating Junction Temperature increased from 200°C to 225°C in Maximum Ratings table and related “Continuous use at maximum temperature will affect MTTF” footnote added, p. 1
8	Sept. 2012	• Added part number MRF6VP11KGSR5, p. 1 • Added 2282–02 (NI–1230S–4 Gull) package isometric, p. 1, and Mechanical Outline, p. 10, 11 • Table 3, ESD Protection Characteristics: added the device’s ESD passing level as applicable to each ESD class, p. 2 • Modified figure titles and/or graph axes labels to clarify application use, p. 5, 6 • Fig. 12, Transient Thermal Impedance: graph updated to show correct CW operation, p. 6 • Fig. 13, MTTF versus Junction Temperature – CW: MTTF end temperature on graph changed to match maximum operating junction temperature, p. 6 • Fig. 14, MTTF versus Junction Temperature – Pulsed removed, p. 6. Refer to the device’s MTTF Calculator available at freescale.com/RFpower. Select Software & Tools/Development Tools/Calculators to access MTTF calculators by product.

8.20.2 Datasheet of MRFE6VP61K25H

Freescale Semiconductor
Technical Data

Document Number: MRFE6VP61K25H
Rev. 4.1, 3/2014

RoHS

RF Power LDMOS Transistors

High Ruggedness N-Channel Enhancement-Mode Lateral MOSFETs

These high ruggedness devices are designed for use in high VSWR industrial (including laser and plasma exciters), broadcast (analog and digital), aerospace and radio/land mobile applications. They are unmatched input and output designs allowing wide frequency range utilization, between 1.8 and 600 MHz.

- Typical Performance: V_{DD} = 50 Volts, I_{DQ} = 100 mA

Signal Type	P_{out} (W)	f (MHz)	G_{ps} (dB)	η_D (%)
Pulse (100 µsec, 20% Duty Cycle)	1250 Peak	230	24.0	74.0
CW	1250 CW	230	22.9	74.6

Application Circuits (1) — Typical Performance

Frequency (MHz)	Signal Type	P_{out} (W)	G_{ps} (dB)	η_D (%)
27	CW	1300	27	81
40	CW	1300	26	85
81.36	CW	1250	27	84
87.5–108	CW	1100	24	80
144–148	CW	1250	26	78
170–230	DVB-T	225	25	30
352	Pulse (200 µsec, 20% Duty Cycle)	1250	21.5	66
352	CW	1150	20.5	68
500	CW	1000	18	58

1. Contact your local Freescale sales office for additional information on specific circuit designs.

Load Mismatch/Ruggedness

Frequency (MHz)	Signal Type	VSWR	P_{out} (W)	Test Voltage	Result
230	Pulse (100 µsec, 20% Duty Cycle)	> 65:1 at all Phase Angles	1500 Peak (3 dB Overdrive)	50	No Device Degradation

Features

- Unmatched Input and Output Allowing Wide Frequency Range Utilization
- Device can be used Single-Ended or in a Push-Pull Configuration
- Qualified Up to a Maximum of 50 V_{DD} Operation
- Characterized from 30 V to 50 V for Extended Power Range
- Suitable for Linear Application with Appropriate Biasing
- Integrated ESD Protection with Greater Negative Gate-Source Voltage Range for Improved Class C Operation
- Characterized with Series Equivalent Large-Signal Impedance Parameters
- In Tape and Reel. R6 Suffix = 150 Units, 56 mm Tape Width, 13-inch Reel. R5 Suffix = 50 Units, 56 mm Tape Width, 13-inch Reel.

MRFE6VP61K25HR6
MRFE6VP61K25HR5
MRFE6VP61K25HSR5
MRFE6VP61K25GSR5

1.8–600 MHz, 1250 W CW, 50 V
WIDEBAND
RF POWER LDMOS TRANSISTORS

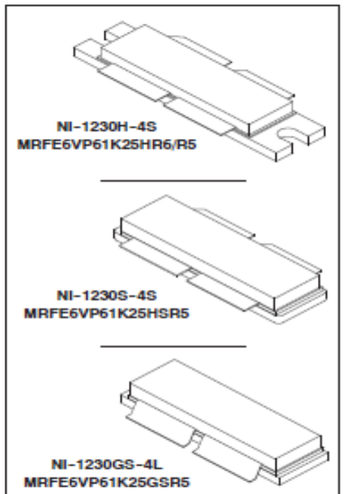

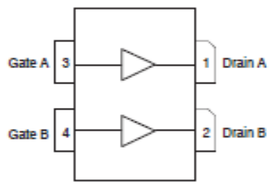

(Top View)

Note: The backside of the package is the source terminal for the transistors.

Figure 1. Pin Connections

© Freescale Semiconductor, Inc., 2010-2014. All rights reserved.

freescale

Table 1. Maximum Ratings

Rating	Symbol	Value	Unit
Drain-Source Voltage	V_{DSS}	-0.5, +133	Vdc
Gate-Source Voltage	V_{GS}	-6.0, +10	Vdc
Storage Temperature Range	T_{stg}	-65 to +150	°C
Case Operating Temperature	T_C	150	°C
Operating Junction Temperature (1,2)	T_J	225	°C
Total Device Dissipation @ T_C = 25°C Derate above 25°C	P_D	1333 6.67	W W/°C

Table 2. Thermal Characteristics

Characteristic	Symbol	Value (2,3)	Unit
Thermal Resistance, Junction to Case CW: Case Temperature 63°C, 1250 W CW, I_{DQ} = 100 mA, 230 MHz	$R_{\theta JC}$	0.15	°C/W
Thermal Impedance, Junction to Case Pulse: Case Temperature 66°C, 1250 W Pulse, 100 µsec Pulse Width, 20% Duty Cycle, I_{DQ} = 100 mA, 230 MHz	$Z_{\theta JC}$	0.03	°C/W

Table 3. ESD Protection Characteristics

Test Methodology	Class
Human Body Model (per JESD22-A114)	2, passes 3500 V
Machine Model (per EIA/JESD22-A115)	B, passes 250 V
Charge Device Model (per JESD22-C101)	IV, passes 4000 V

Table 4. Electrical Characteristics (T_A = 25°C unless otherwise noted)

Characteristic	Symbol	Min	Typ	Max	Unit
Off Characteristics (4)					
Gate-Source Leakage Current (V_{GS} = 5 Vdc, V_{DS} = 0 Vdc)	I_{GSS}	—	—	1	µAdc
Drain-Source Breakdown Voltage (V_{GS} = 0 Vdc, I_D = 100 mA)	$V_{(BR)DSS}$	133	—	—	Vdc
Zero Gate Voltage Drain Leakage Current (V_{DS} = 50 Vdc, V_{GS} = 0 Vdc)	I_{DSS}	—	—	10	µAdc
Zero Gate Voltage Drain Leakage Current (V_{DS} = 100 Vdc, V_{GS} = 0 Vdc)	I_{DSS}	—	—	20	µAdc
On Characteristics					
Gate Threshold Voltage (4) (V_{DS} = 10 Vdc, I_D = 1776 µAdc)	$V_{GS(th)}$	1.7	2.2	2.7	Vdc
Gate Quiescent Voltage (V_{DD} = 50 Vdc, I_D = 100 mAdc, Measured in Functional Test)	$V_{GS(Q)}$	1.9	2.2	2.9	Vdc
Drain-Source On-Voltage (4) (V_{GS} = 10 Vdc, I_D = 2 Adc)	$V_{DS(on)}$	—	0.15	—	Vdc
Forward Transconductance (V_{DS} = 10 Vdc, I_D = 30 Adc)	g_{fs}	—	28.0	—	S
Dynamic Characteristics (4)					
Reverse Transfer Capacitance (V_{DS} = 50 Vdc ± 30 mV(rms)ac @ 1 MHz, V_{GS} = 0 Vdc)	C_{rss}	—	2.8	—	pF
Output Capacitance (V_{DS} = 50 Vdc ± 30 mV(rms)ac @ 1 MHz, V_{GS} = 0 Vdc)	C_{oss}	—	185	—	pF
Input Capacitance (V_{DS} = 50 Vdc, V_{GS} = 0 Vdc ± 30 mV(rms)ac @ 1 MHz)	C_{iss}	—	582	—	pF

1. Continuous use at maximum temperature will affect MTTF.
2. MTTF calculator available at http://www.freescale.com/rf. Select Software & Tools/Development Tools/Calculators to access MTTF calculators by product.
3. Refer to AN1955, *Thermal Measurement Methodology of RF Power Amplifiers*. Go to http://www.freescale.com/rf. Select Documentation/Application Notes - AN1955.
4. Each side of device measured separately.

(continued)

Table 4. Electrical Characteristics (T_A = 25°C unless otherwise noted) (continued)

Characteristic	Symbol	Min	Typ	Max	Unit
Functional Tests (1) (In Freescale Test Fixture, 50 ohm system) V_{DD} = 50 Vdc, I_{DQ} = 100 mA, P_{out} = 1250 W Peak (250 W Avg.), f = 230 MHz, 100 µsec Pulse Width, 20% Duty Cycle					
Power Gain	G_{ps}	23.0	24.0	26.0	dB
Drain Efficiency	η_D	72.5	74.0	—	%
Input Return Loss	IRL	—	-14	-10	dB

Table 5. Load Mismatch/Ruggedness (In Freescale Test Fixture, 50 ohm system) I_{DQ} = 100 mA

Frequency (MHz)	Signal Type	VSWR	P_{out} (W)	Test Voltage, V_{DD}	Result
230	Pulse (100 µsec, 20% Duty Cycle)	> 65:1 at all Phase Angles	1500 Peak (3 dB Overdrive)	50	No Device Degradation

1. Measurements made with device in straight lead configuration before any lead forming operation is applied. Lead forming is used for gull wing (GS) parts.

TYPICAL CHARACTERISTICS

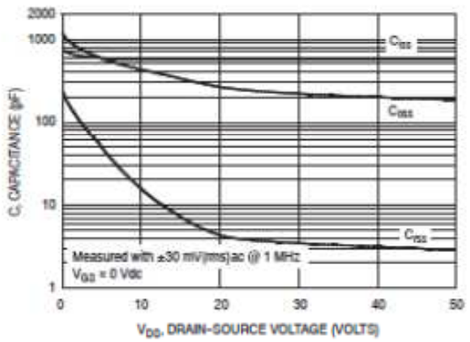

Note: Each side of device measured separately.

Figure 4. Capacitance versus Drain-Source Voltage

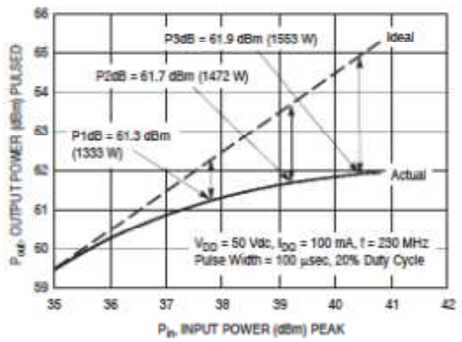

Figure 5. Output Power versus Input Power

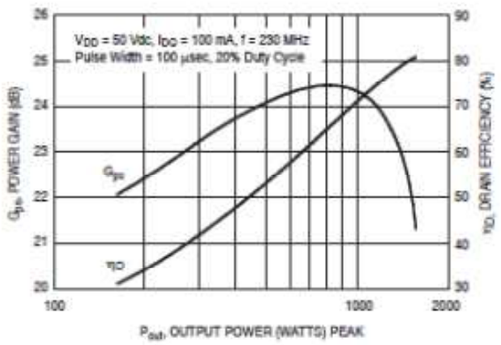

Figure 6. Power Gain and Drain Efficiency versus Output Power

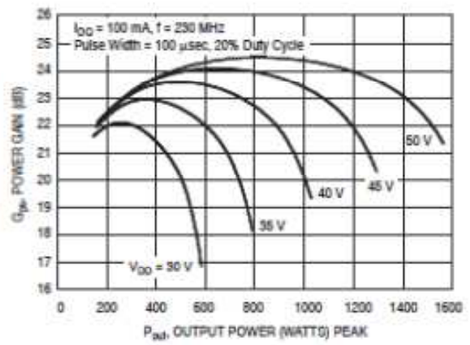

Figure 7. Power Gain versus Output Power

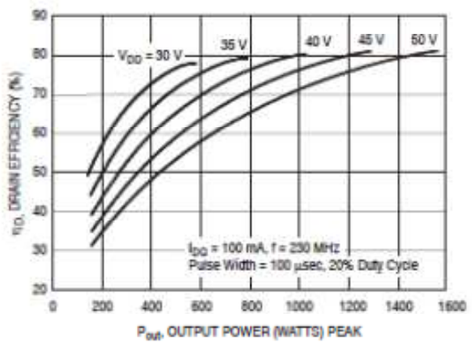

Figure 8. Drain Efficiency versus Output Power

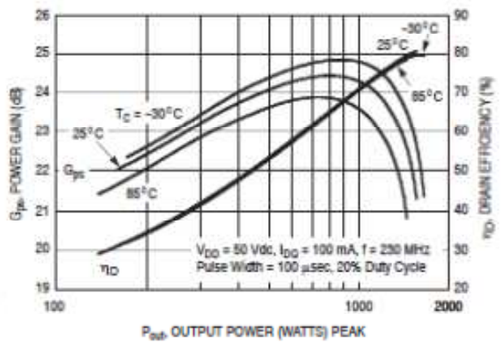

Figure 9. Power Gain and Drain Efficiency versus Output Power

TYPICAL CHARACTERISTICS — 87.5–108 MHz FM BROADCAST REFERENCE CIRCUIT

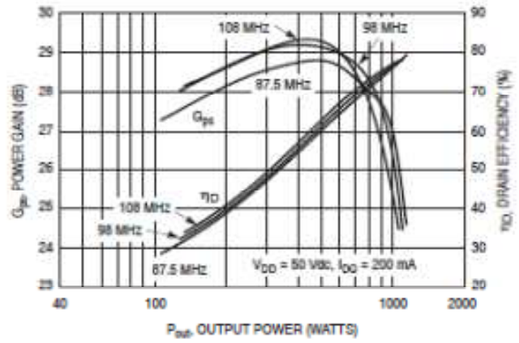

Figure 15. Power Gain and Drain Efficiency versus Output Power

V_{DD} = 50 Vdc, I_{DQ} = 200 mA, P_{out} = 1100 W CW

f MHz	Z_{source} Ω	Z_{load} Ω
87.5	2.20 + j6.70	4.90 + j2.90
98	2.30 + j6.90	4.10 + j2.50
108	2.30 + j7.00	4.40 + j3.60

Z_{source} = Test circuit impedance as measured from gate to gate, balanced configuration.

Z_{load} = Test circuit impedance as measured from drain to drain, balanced configuration.

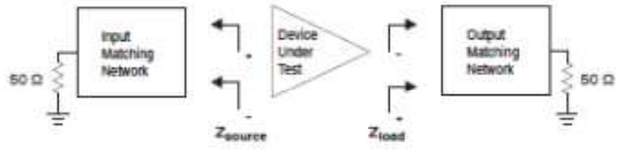

Figure 16. Series Equivalent 87.5–108 MHz FM Broadcast Reference Circuit Source and Load Impedance

PACKAGE DIMENSIONS

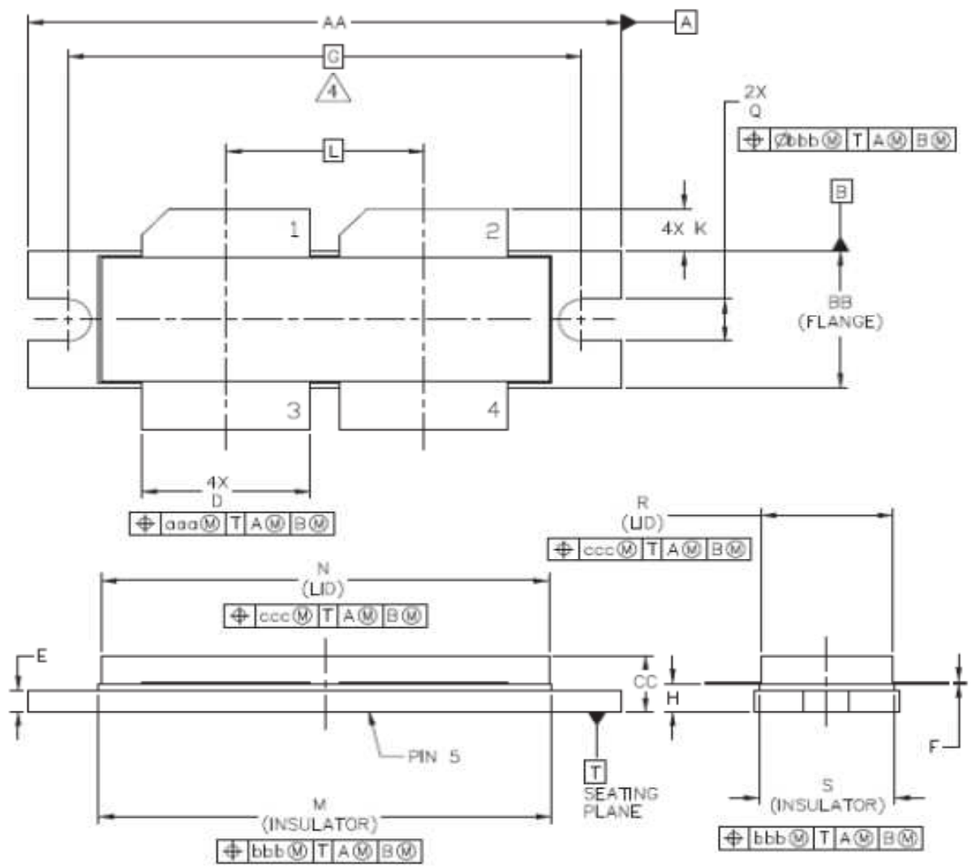

© FREESCALE SEMICONDUCTOR, INC. ALL RIGHTS RESERVED.	MECHANICAL OUTLINE	PRINT VERSION NOT TO SCALE
TITLE: NI−1230−4H	DOCUMENT NO: 98ASB16977C	REV: F
	STANDARD: NON−JEDEC	
	28 FEB 2013	

NOTES:

1. INTERPRET DIMENSIONS AND TOLERANCES PER ASME Y14.5M−1994.
2. CONTROLLING DIMENSION: INCH
3. DIMENSION H IS MEASURED .030 INCH (0.762 MM) AWAY FROM PACKAGE BODY.
4. RECOMMENDED BOLT CENTER DIMENSION OF 1.52 INCH (38.61 MM) BASED ON M3 SCREW.

DIM	INCH MIN	INCH MAX	MILLIMETER MIN	MILLIMETER MAX	DIM	INCH MIN	INCH MAX	MILLIMETER MIN	MILLIMETER MAX
AA	1.615	1.625	41.02	41.28	N	1.218	1.242	30.94	31.55
BB	.395	.405	10.03	10.29	Q	.120	.130	3.05	3.30
CC	.170	.190	4.32	4.83	R	.355	.365	9.02	9.27
D	.455	.465	11.56	11.81	S	.365	.375	9.27	9.53
E	.062	.066	1.57	1.68					
F	.004	.007	0.10	0.18					
G	1.400 BSC		35.56 BSC		aaa	.013		0.33	
H	.082	.090	2.08	2.29	bbb	.010		0.25	
K	.117	.137	2.97	3.48	ccc	.020		0.51	
L	.540 BSC		13.72 BSC						
M	1.219	1.241	30.96	31.52					

© FREESCALE SEMICONDUCTOR, INC. ALL RIGHTS RESERVED.	MECHANICAL OUTLINE	PRINT VERSION NOT TO SCALE
TITLE: NI−1230−4H	DOCUMENT NO: 98ASB16977C	REV: F
	STANDARD: NON−JEDEC	
	28 FEB 2013	

MRFE6VP61K25HR6 MRFE6VP61K25HR5 MRFE6VP61K25HSR5 MRFE6VP61K25GSR5
RF Device Data

8.21 Harmonics Pick-Up (CSFI0350R1)

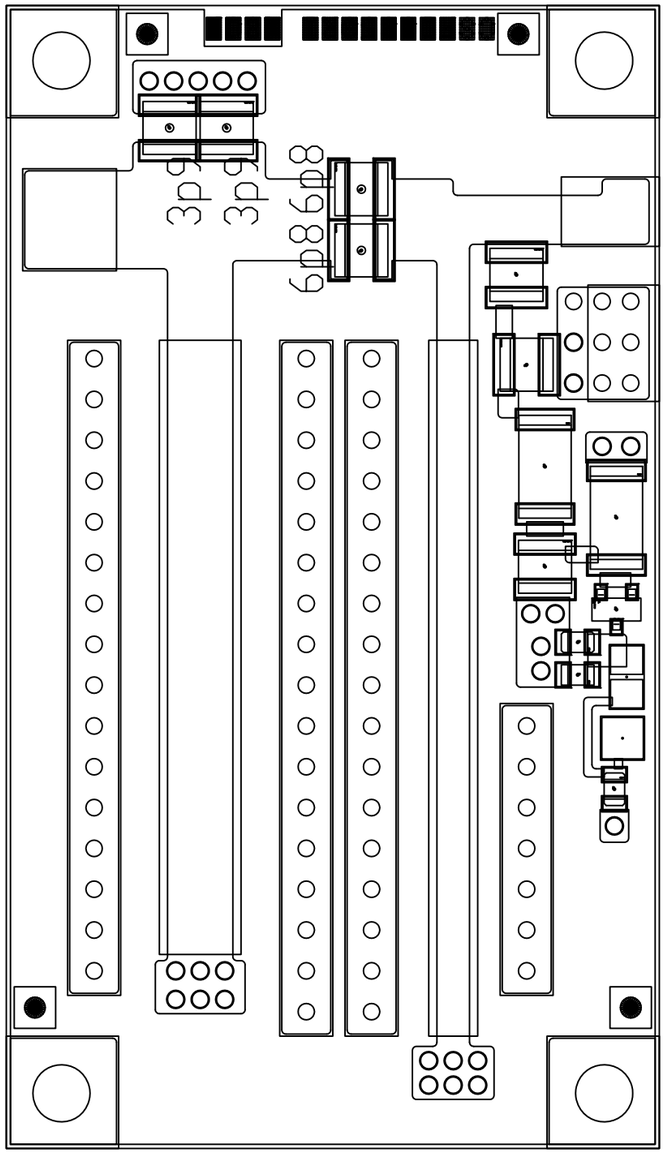

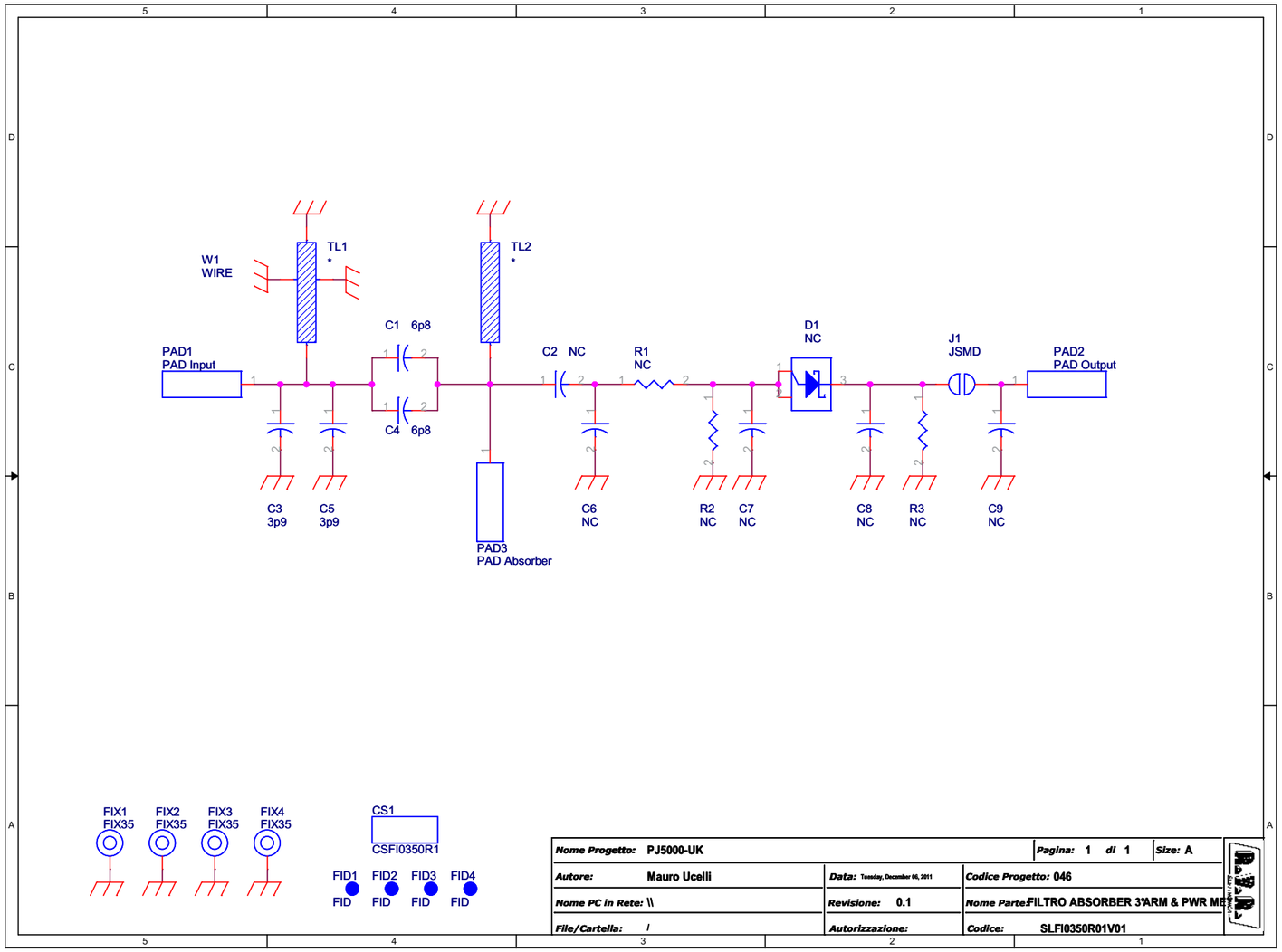

FILTRO ABSORBER 3°ARM & PWR MET
SLFI0350R01V01
Revision: 0.1

Item	Quantity	Reference	Part	Description
1	1	CS1	CSFI0350R1	Circuito stampato
2	2	C1,C4	6p8	Cond. SMD 1212 HQ
3	3	C2,C6,C7	NC	Cond. SMD 1212 HQ
4	2	C3,C5	3p9	Cond. SMD 1212 HQ
5	2	C8,C9	NC	Cond. SMD 0805 COG
6	1	D1	NC	
7	4	FID1,FID2,FID3,FID4	FID	Fiducial CS
8	4	FIX1,FIX2,FIX3,FIX4	FIX35	Foro fissaggio 3.5mm
9	1	J1	JSMD	Pad SMD a saldare
10	1	PAD1	PAD Input	Pad SMD saldare
11	1	PAD2	PAD Output	Pad SMD saldare
12	1	PAD3	PAD Absorber	Pad SMD saldare
13	2	R1,R2	NC	Res. SMD 2512 1%
14	1	R3	NC	Res. SMD 0805
15	2	TL1,TL2	*	Linea strip CS
16	1	W1	WIRE	Filo a saldare diam 1mm

9. Replacement parts

9.1 Replacement Pallet mosfet

From the drawing you can see the layout of the pallet.

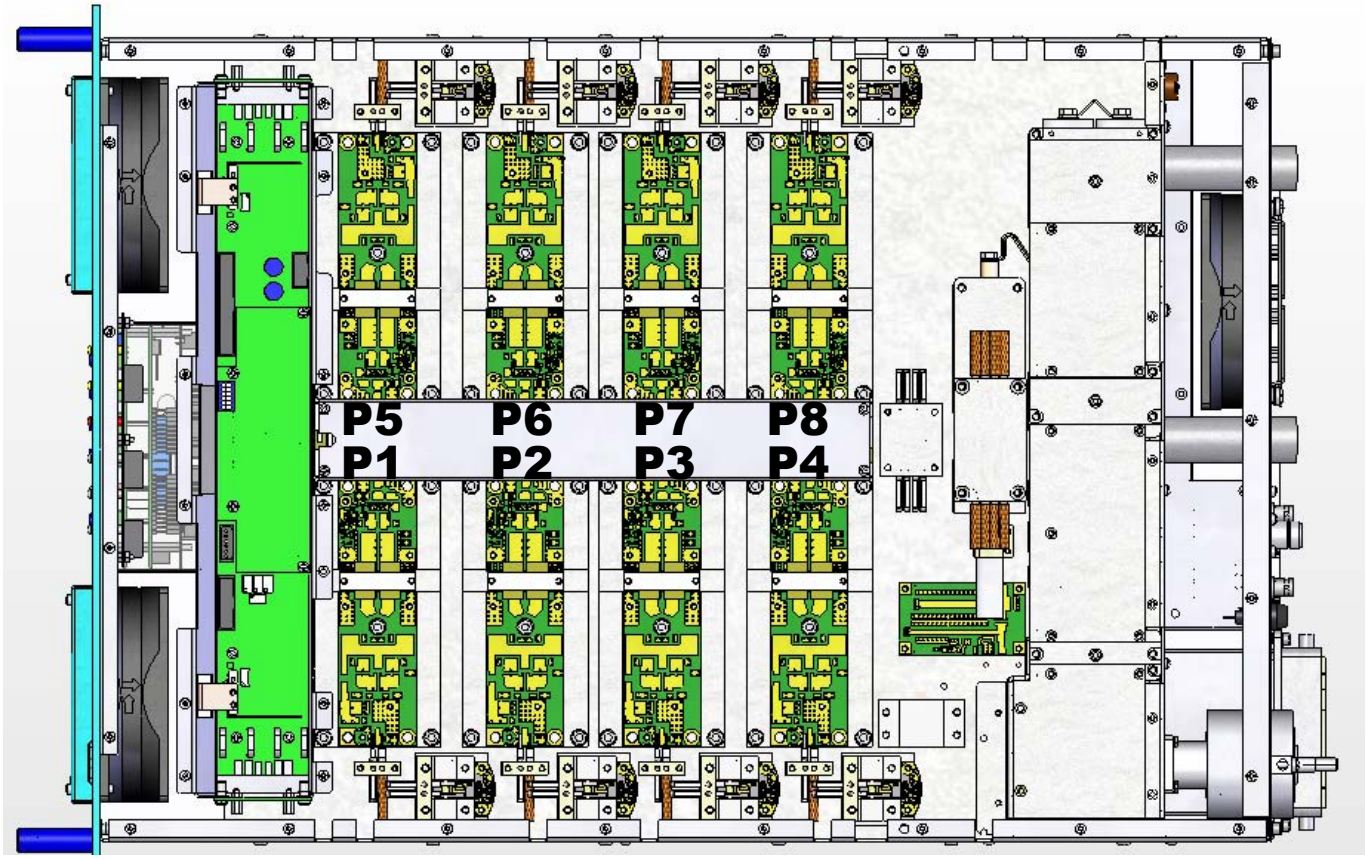

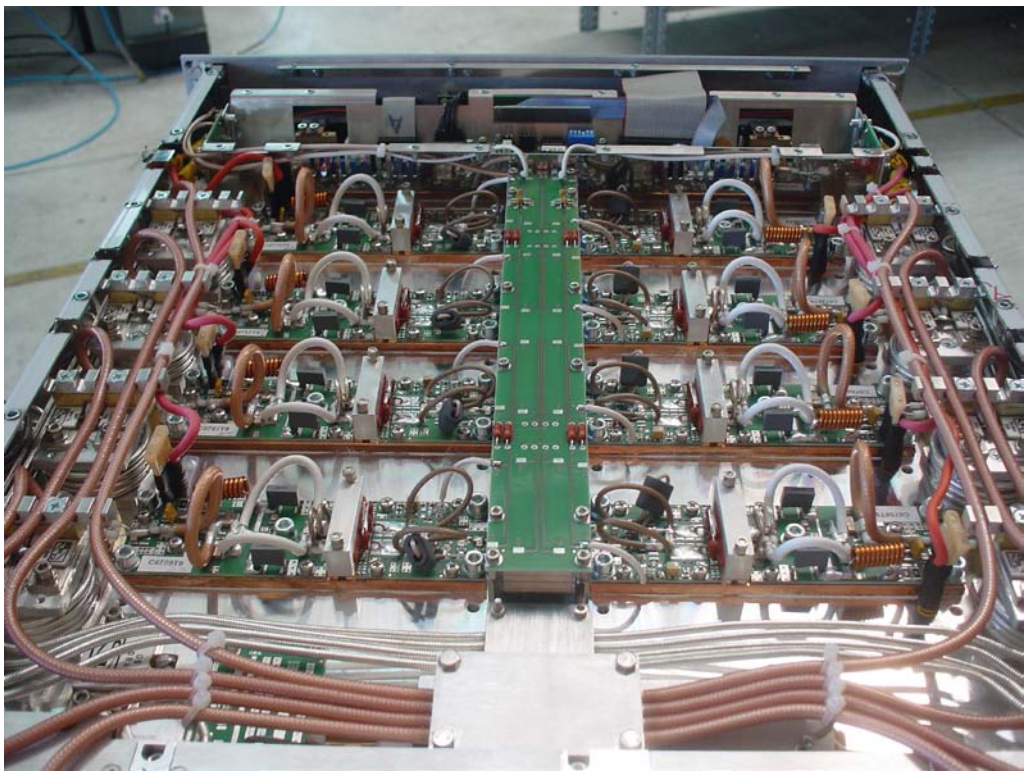

Remove two welded jumpers to the end, one connected to the splitter and the other connected to the RF combiner and unsolder the bias wire.

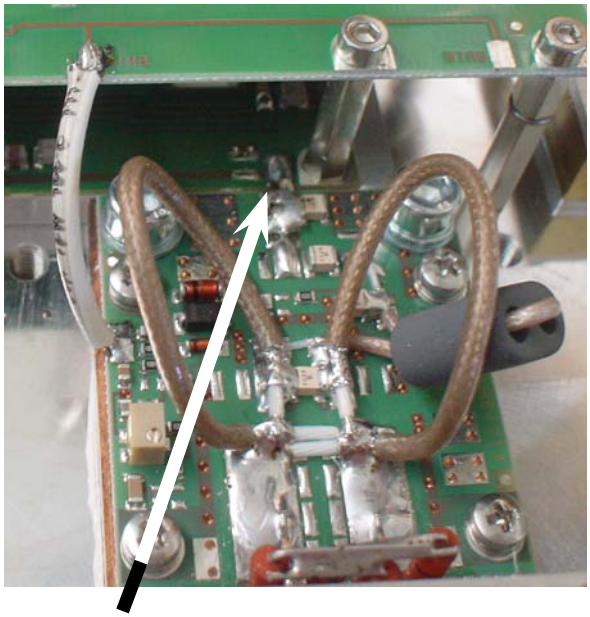

Jumper side
splitter (input)

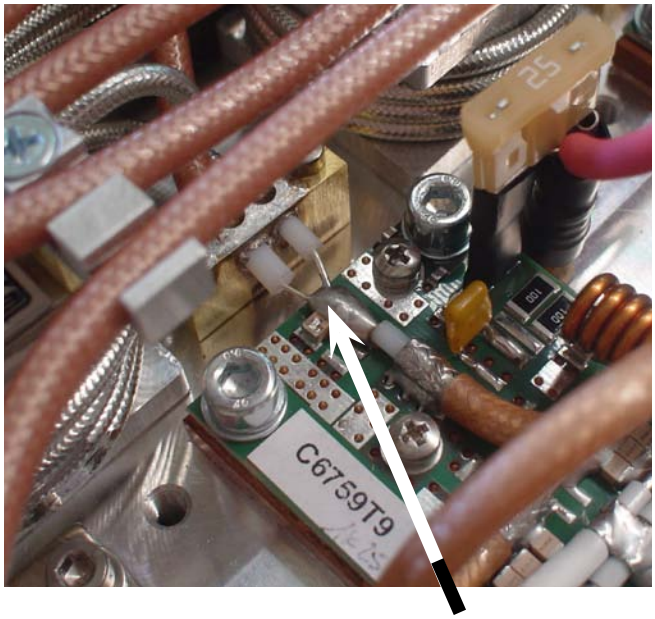

Jumper side
combiner (output)

Unsolder the bias wire and remove the fuse.

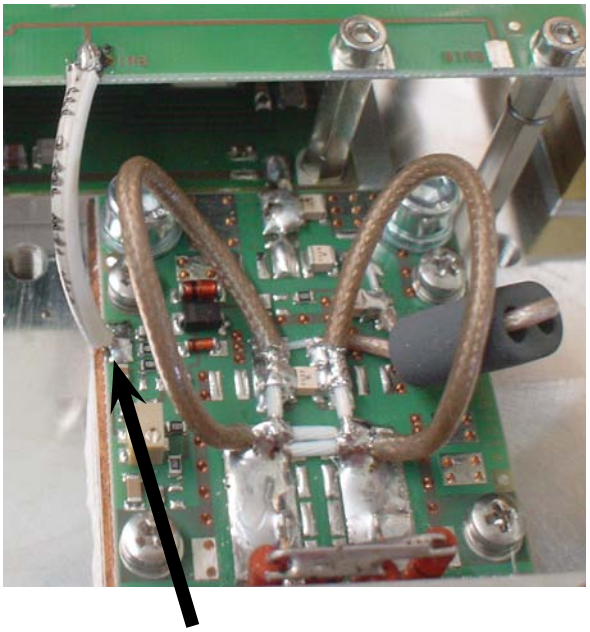

Bias wire

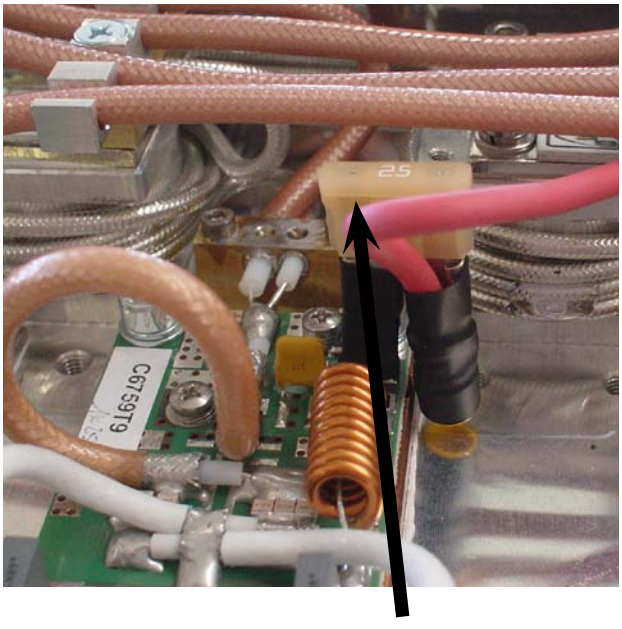

Fuse

Remove the M5 socket head screws with setscrew wrench to 4.Make sure the wrench is in good conditions and damaged there may be a risk to run the seat of the wrench can be problematic to disassemble the pallet.

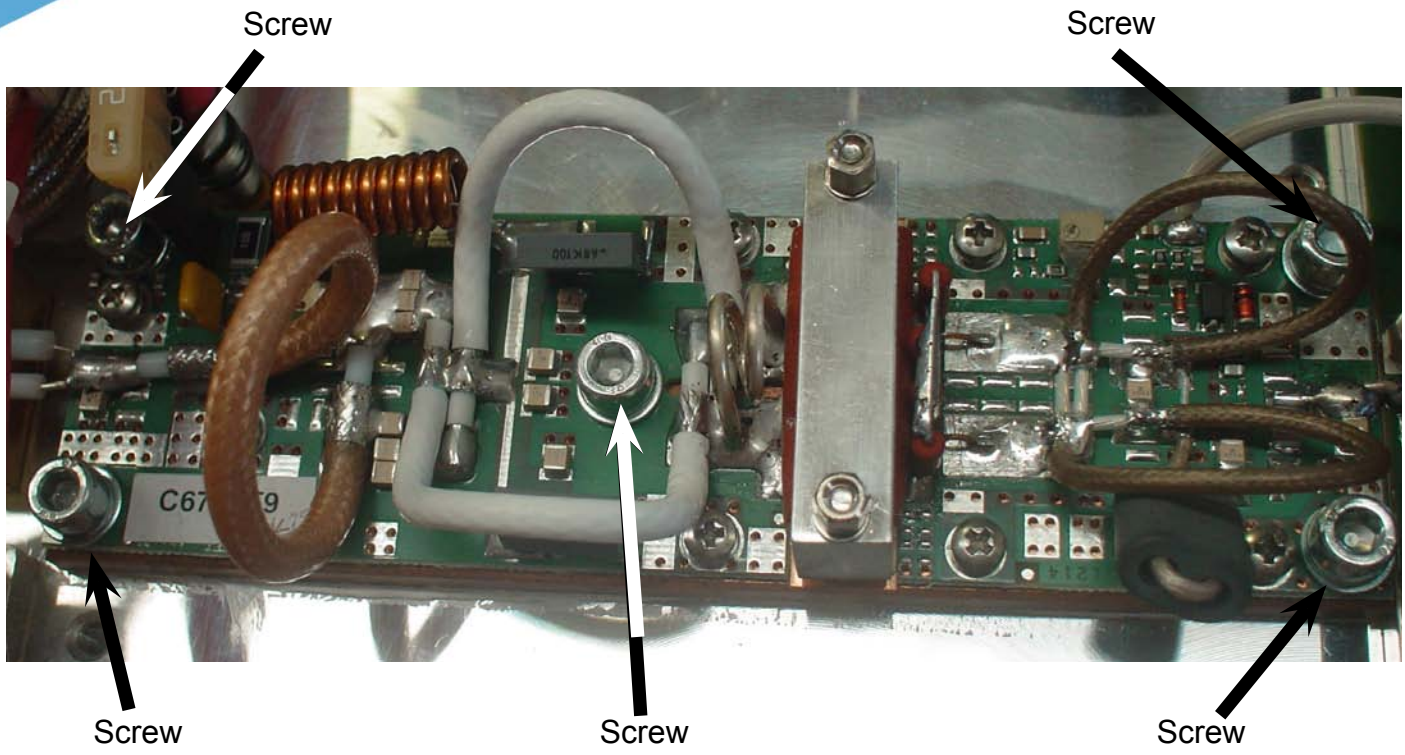

Once removed the old pallet clean fine the complete area from old conductive paste and remove superfluous tin from the board of combinator and splitter.
Take a new pallet, stretch uniformly the conductive paste, do not exagerate with the pasta because it can escape when the screws are tightened.
Place pallet in its seat, place screws and tighten in crossed mode, so as tighten evenly.
Once done,reisert the jumpers on splitter and RF combiner.

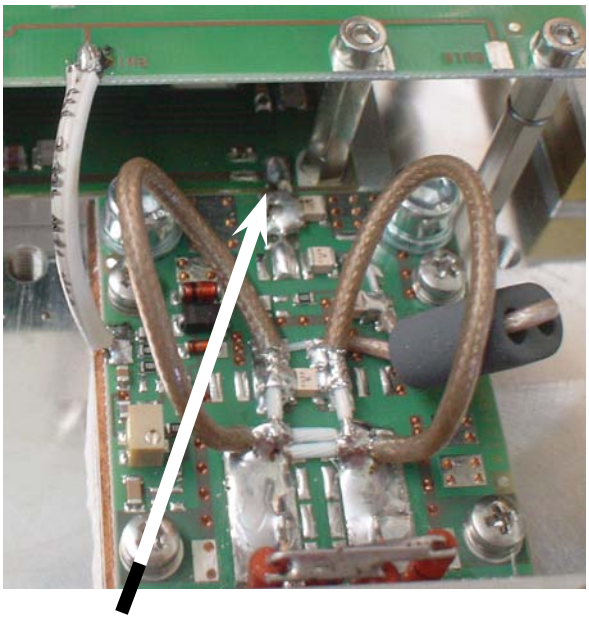

Jumper side
splitter (input)

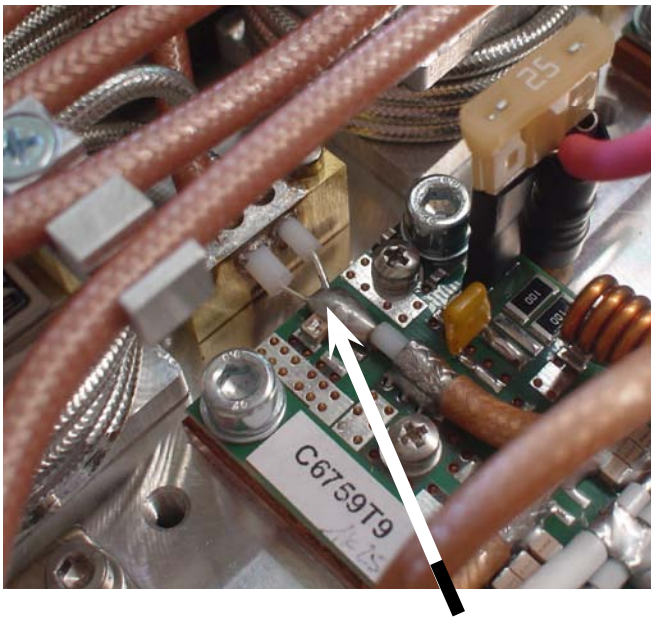

Jumper side
combiner (output)

Reconnect the bias wire.

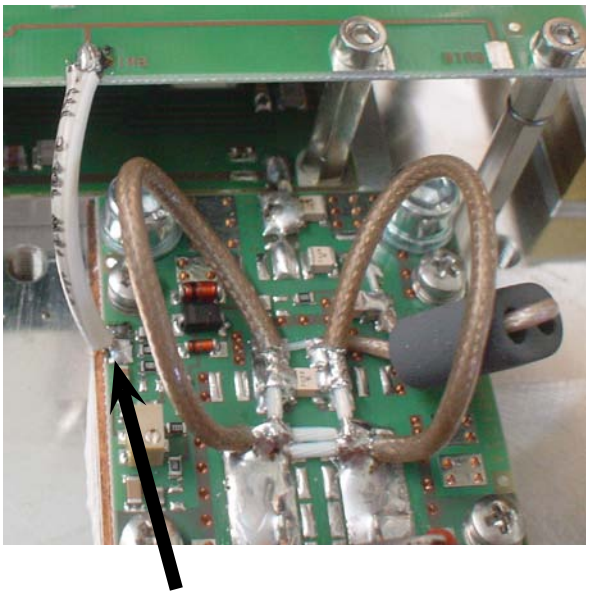

Bias wire

When completed assembly connect the module to a dummy load at 5 Kw if possible next to the CCU of the transmitter 10 Kw (or higher).Then we'll see why.
Feed the module (400Vac o 230Vac).
Take a multimeter by setting for measure DC current and point the ferrule to testing, in place of the fuse and setting with trimmer the Bias current. The value is 1 A at rest.

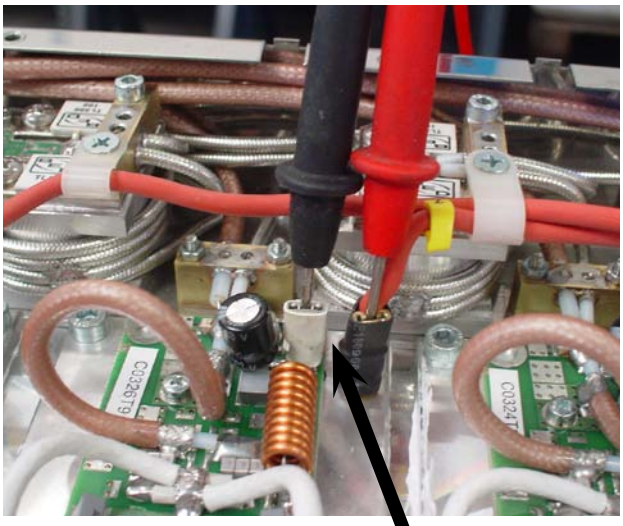

Multimeter to the place of the fuse

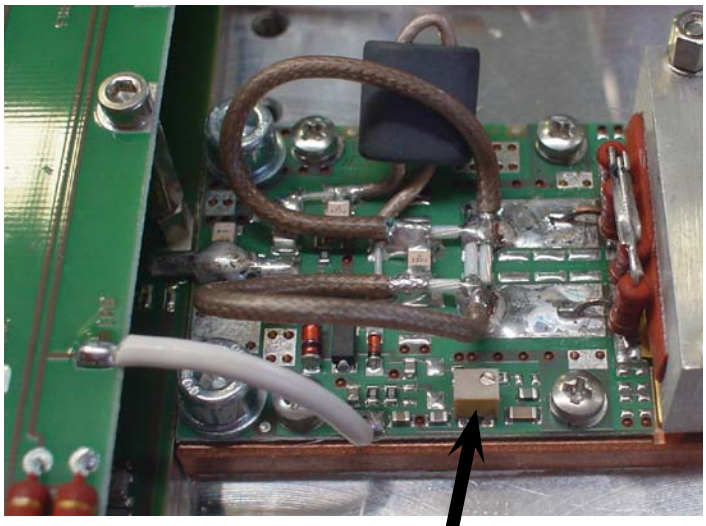

Trimmer

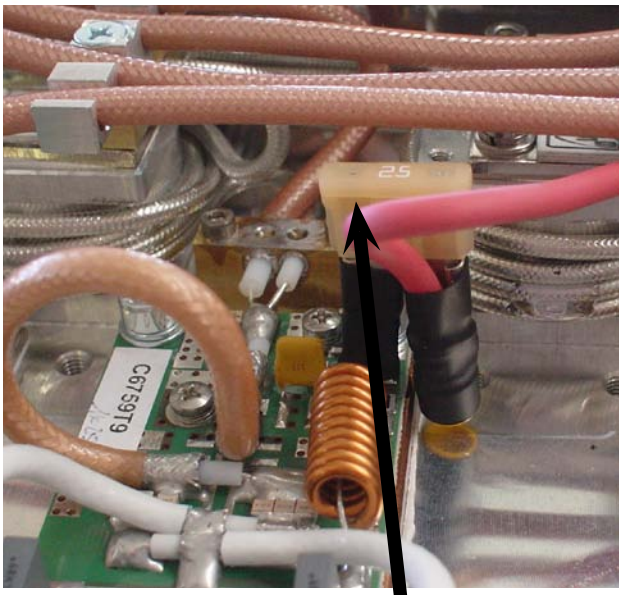

Fuse

Once calibrated the current, turn off the module, reinsert the fuse, connected the DB-15 cable of “Common Bus” relative at the module you have removed, on the rear panel of same.
Take an “Exciter”, possibly with attenuator 6dB in series and up gradually with the power, checking in the menù R.F. Unit xx (xx is the number of module we are calibrating) of CCU if all mosfet absorb same current and working properly.
The maximum difference of absorption beetwen one pallet and the other one must be 2A at the power of 3 Kw. If this difference is greater verify the reason.
Possible causes may be:

- n°1 mosfet who does not work properly;
- pilotage from splitter not correct;
- fuse is not inserted properly.

10. Electrical and mechanical parts

This chapter is an overview of the machine, so you can identify quickly the location of the various electrical and mechanical parts.

10.1 General view

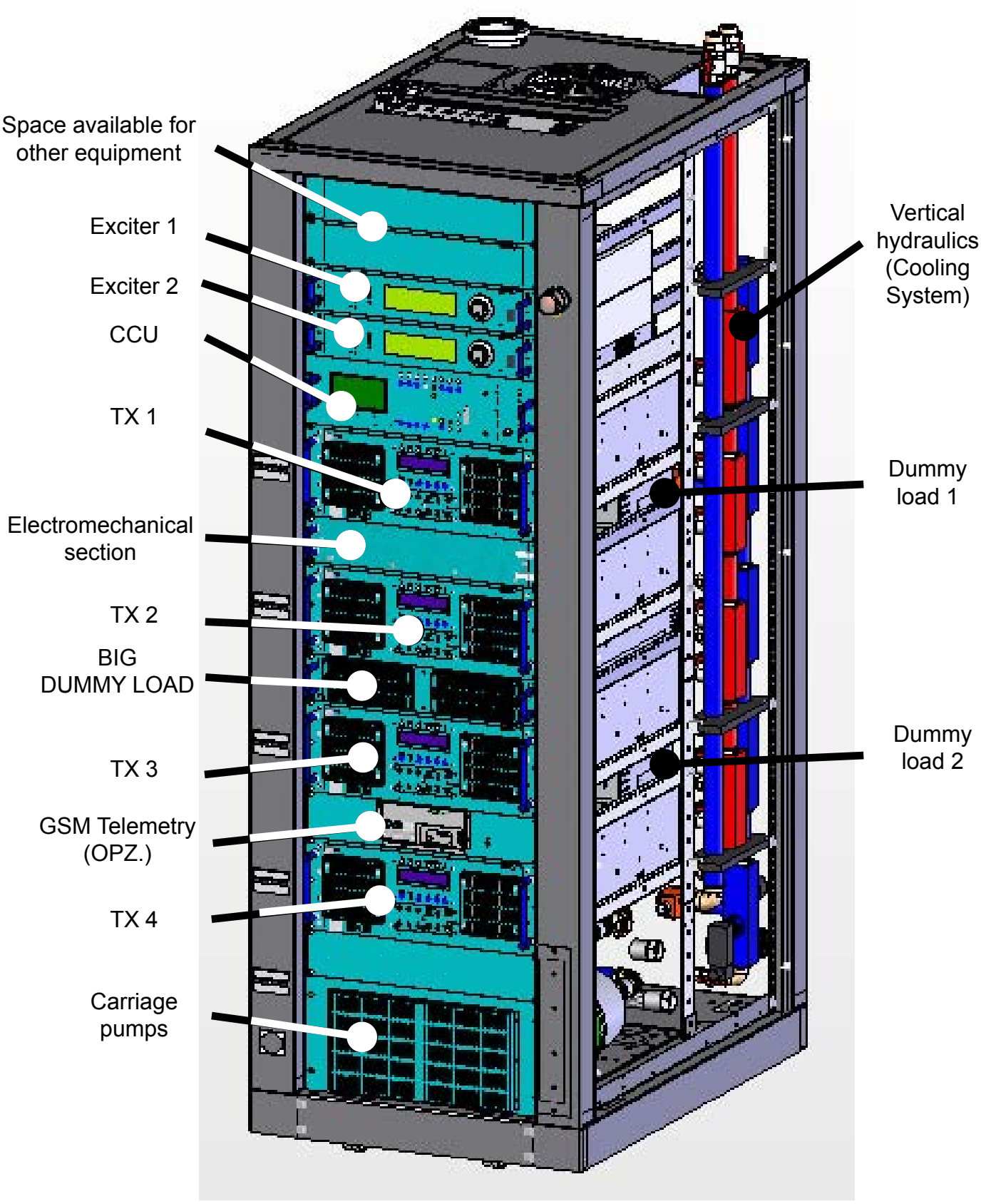

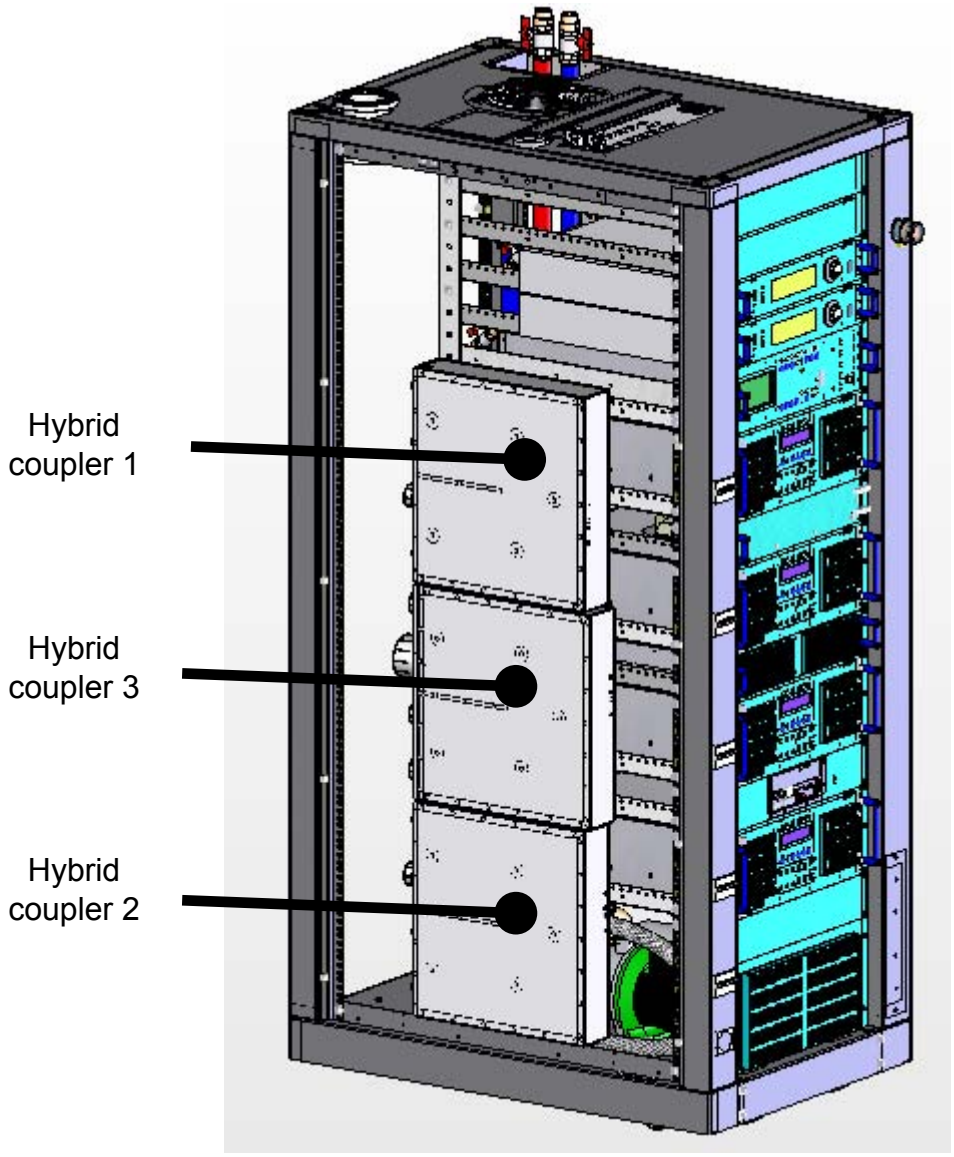
Hybrid coupler 1
Hybrid coupler 3
Hybrid coupler 2

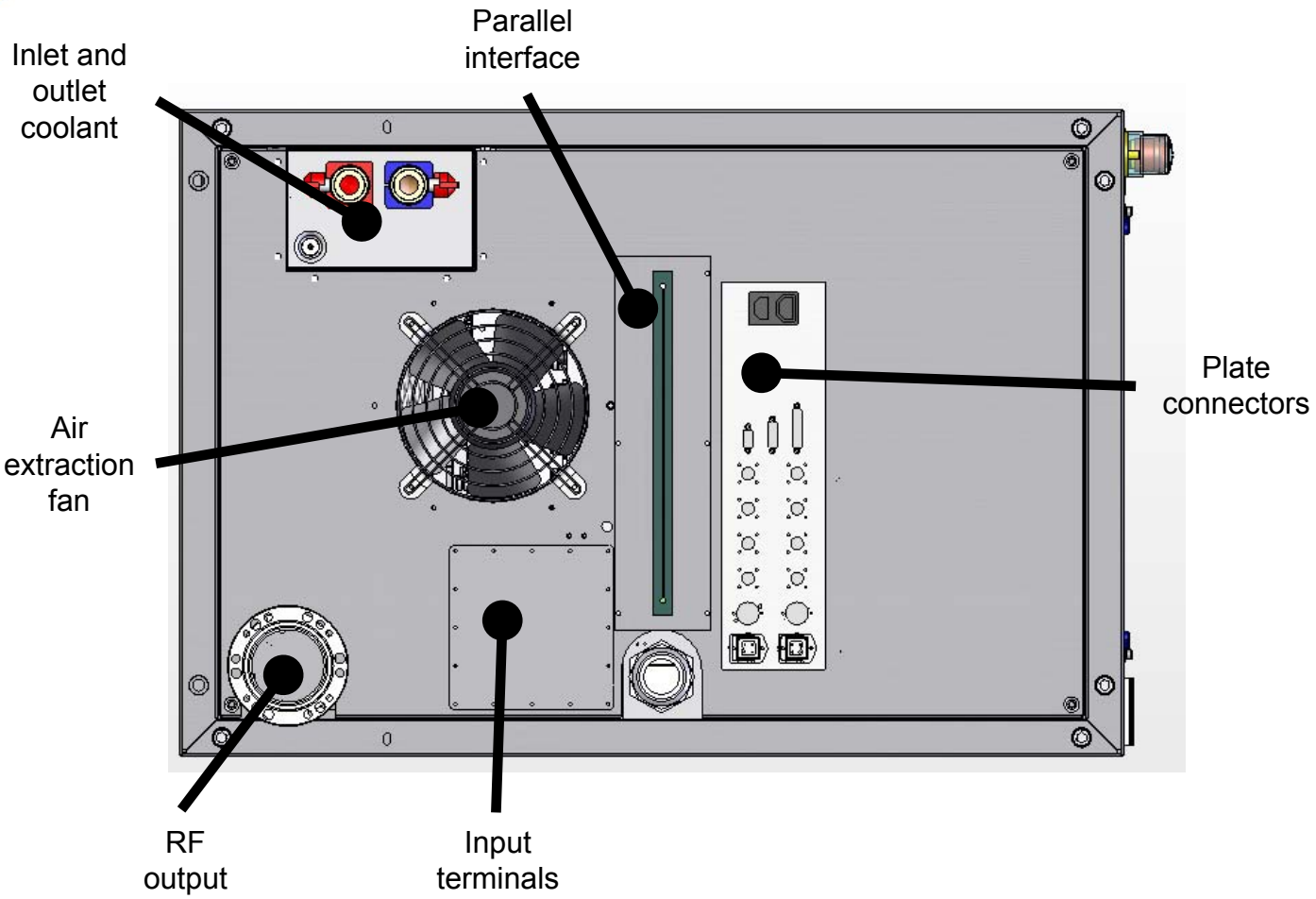
Inlet and outlet coolant
Parallel interface
Plate connectors
Air extraction fan
RF output
Input terminals

10.2 Electromechanical section

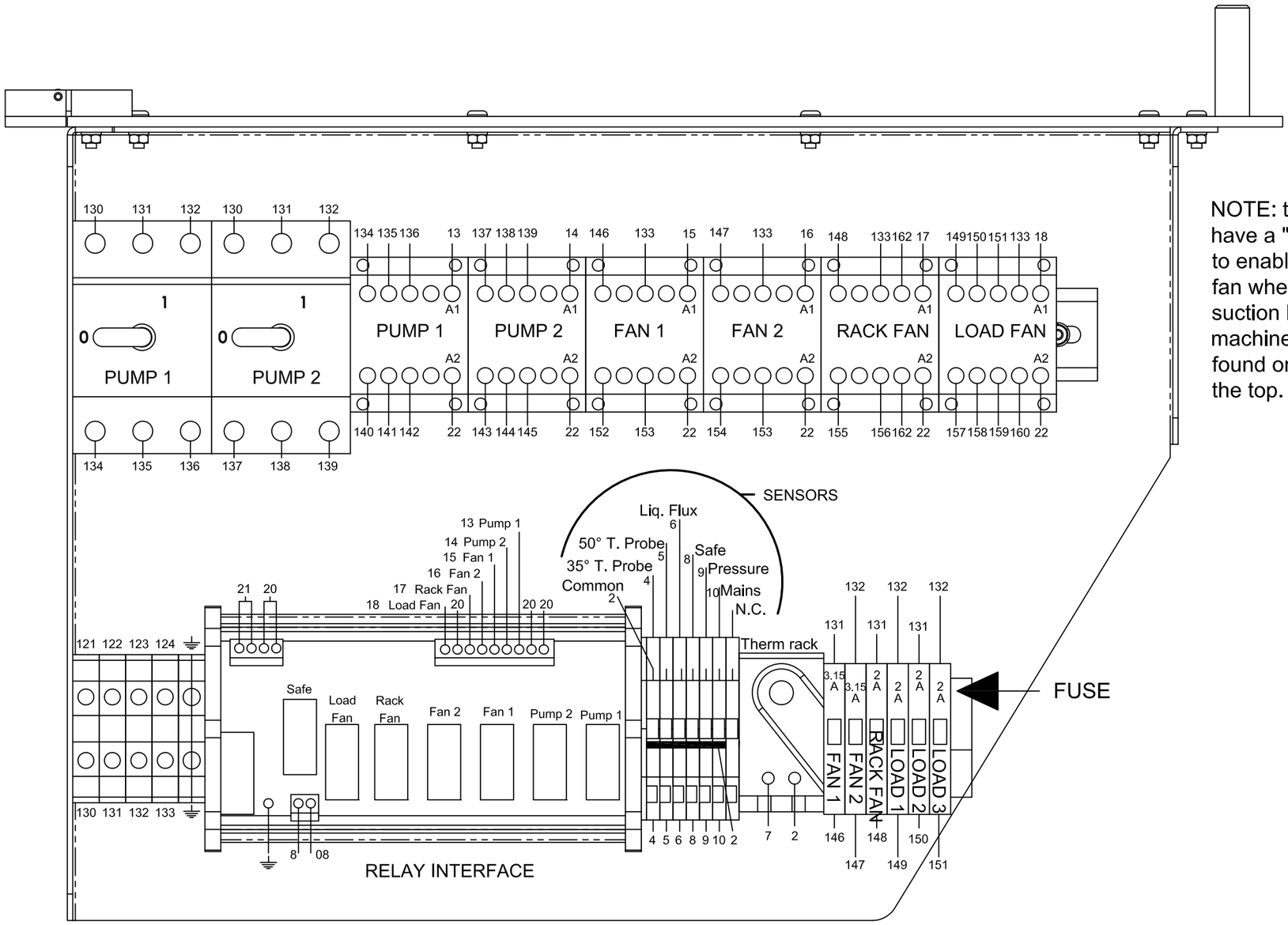

NOTE: terminals 161 and 162 have a "free contact" and serves to enable an external exhaust fan when starts working the suction blower inside the machine.This contact can be found on the input terminal on the top.

Telecomitalia®	DENOMINAZIONE: Electromechanical section for 20Kw H20		
	N° PROGRAMMA: --		MACCHINA: --
SEMILAVORATO: --	PESO GREZZO: --	AUTORE: Nicolini Daniele	CODICE DISEGNO: PELRCK20KWH20
MATERIALE: --	PESO [KG]: --	SCALA: 1:1 / REVISIONE: 01	CODICE AS400: -
TRATTAMENTO: --	DATA: 24/04/2012		
TOLLERANZA GENERALE SECONDO UNI ISO 2768-f		FORMATO: A3	( )

10.3 230/400 V wiring diagram

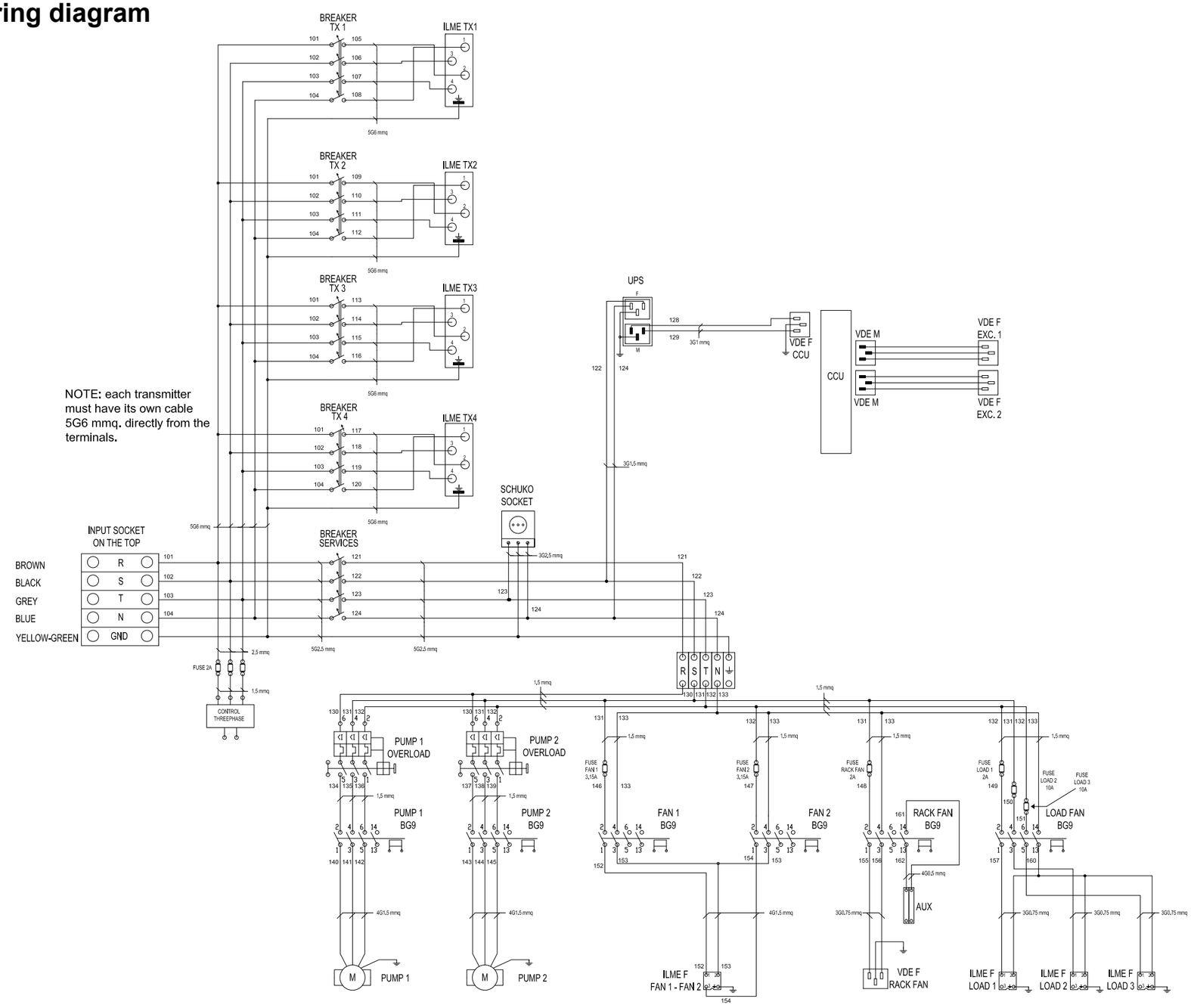

Telecomitalia®	DENOMINAZIONE: Circuito a 220/380 Volt		
	DISPOSITIVO: TX20000U-KLC (Sezione cablaggio)		
	PEZZI PER MACCHINA: 1	N° PROGRAMMA: 0000.TLC	CODICE AS400:
SEMILAVORATO	DISEGNATO: Nicolini D. 16/04/12		CODICE DISEGNO: 3FRCK20UKLC
MATERIALE	SCALA: 1:1	REVISIONE: 01	TAVOLA: 1 di 1 / TOLLERANZA: +/- 0.1mm
TRATTAMENTO			

10.4 Low tension and signals wiring diagrams

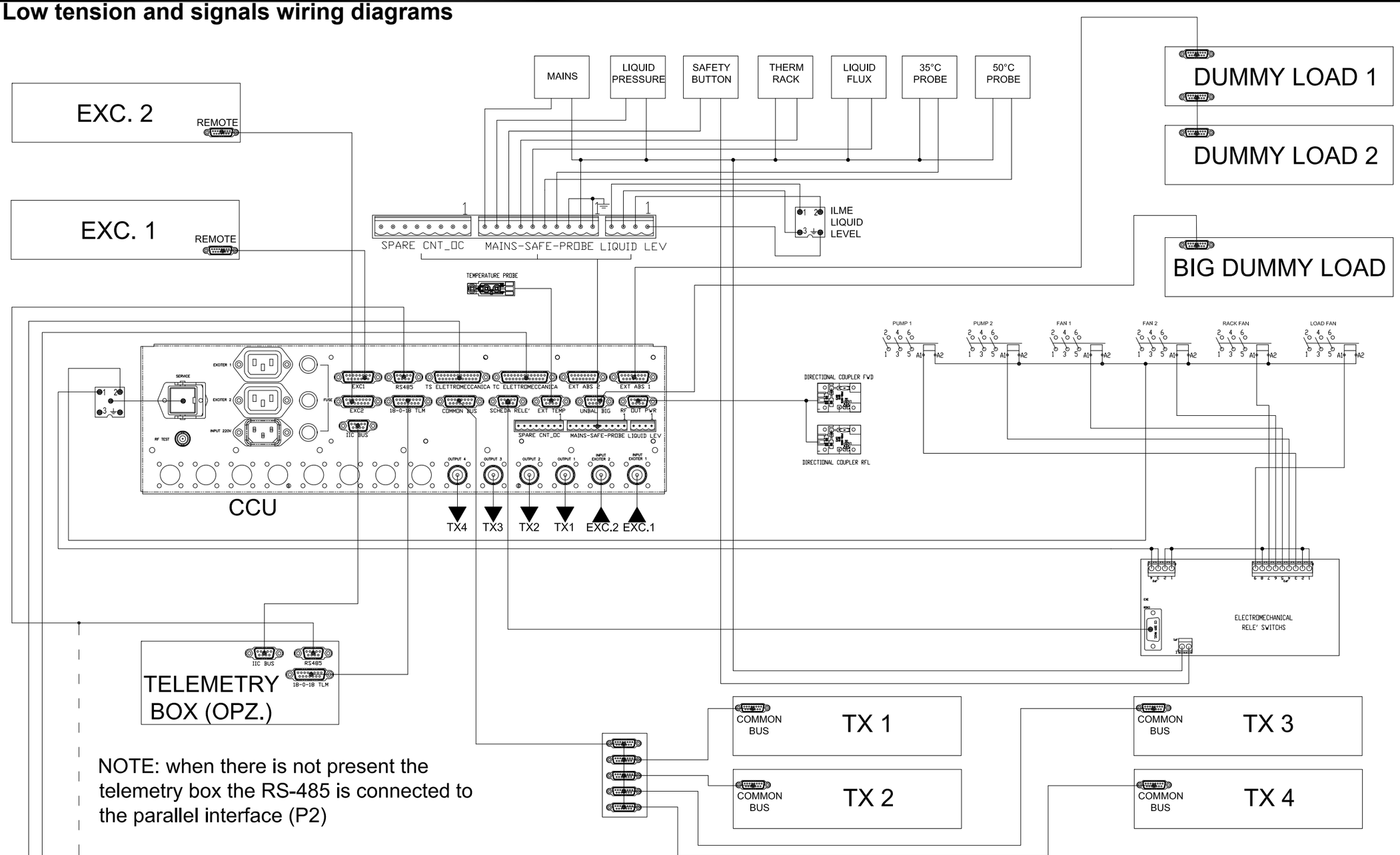

Telecomitalia®	DENOMINAZIONE: Circuito Bassa Tensione e segnale		
	DISPOSITIVO: TX20000U-KLC (Sezione Cablaggio)		
	PEZZI PER MACCHINA: 1	N° PROGRAMMA: 0000.TLC	CODICE AS400:
SEMILAVORATO	DISEGNATO: Nicolini D. 24/04/12		CODICE DISEGNO: LOWTEN20UKLC
MATERIALE	SCALA: 1:1	REVISIONE: 01	TAVOLA: 1 di 1 / TOLLERANZA: +/- 0.1mm
TRATTAMENTO			

10.5 Relay interface board (CSRLYCPROTVJ)

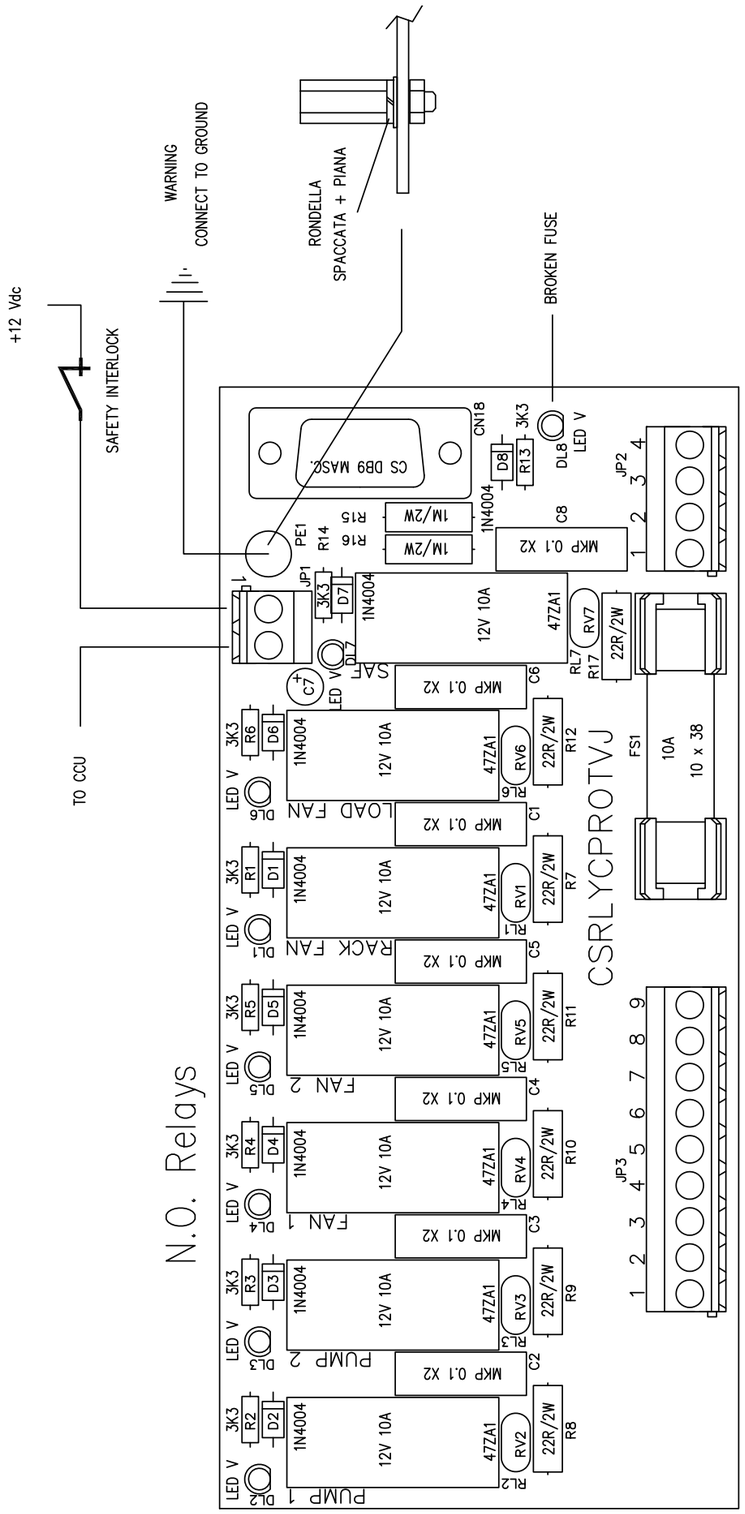

Nome Progetto:	PJ5KPS			Pagina: 1 di 1	Size: A4
Autore:	Griptech - Rev.: Canazza	Data:	17/10/02	Codice Progetto:	
Nome PC in Rete:	\\UT_SRV	Revisione:	1.0 (DC)	Nome Parte:	Relay interface
File/Cartella:	VAL_PWR.DWG	Autorizzazione:		Codice:	CSRLYCPROTVJ
Scala: ◇	Materiale: ◇	Trattamento: ◇			Profilo: ◇

JP3	Contactor	Relay	JP3	Contactor	Relay
1	COMMON	/	6	FAN 2	RL5
2	COMMON	/	7	RACK FAN	RL1
3	PUMP 1	RL2	8	COMMON	/
4	PUMP 2	RL3	9	LOAD FAN	RL6
5	FAN 1	RL4			

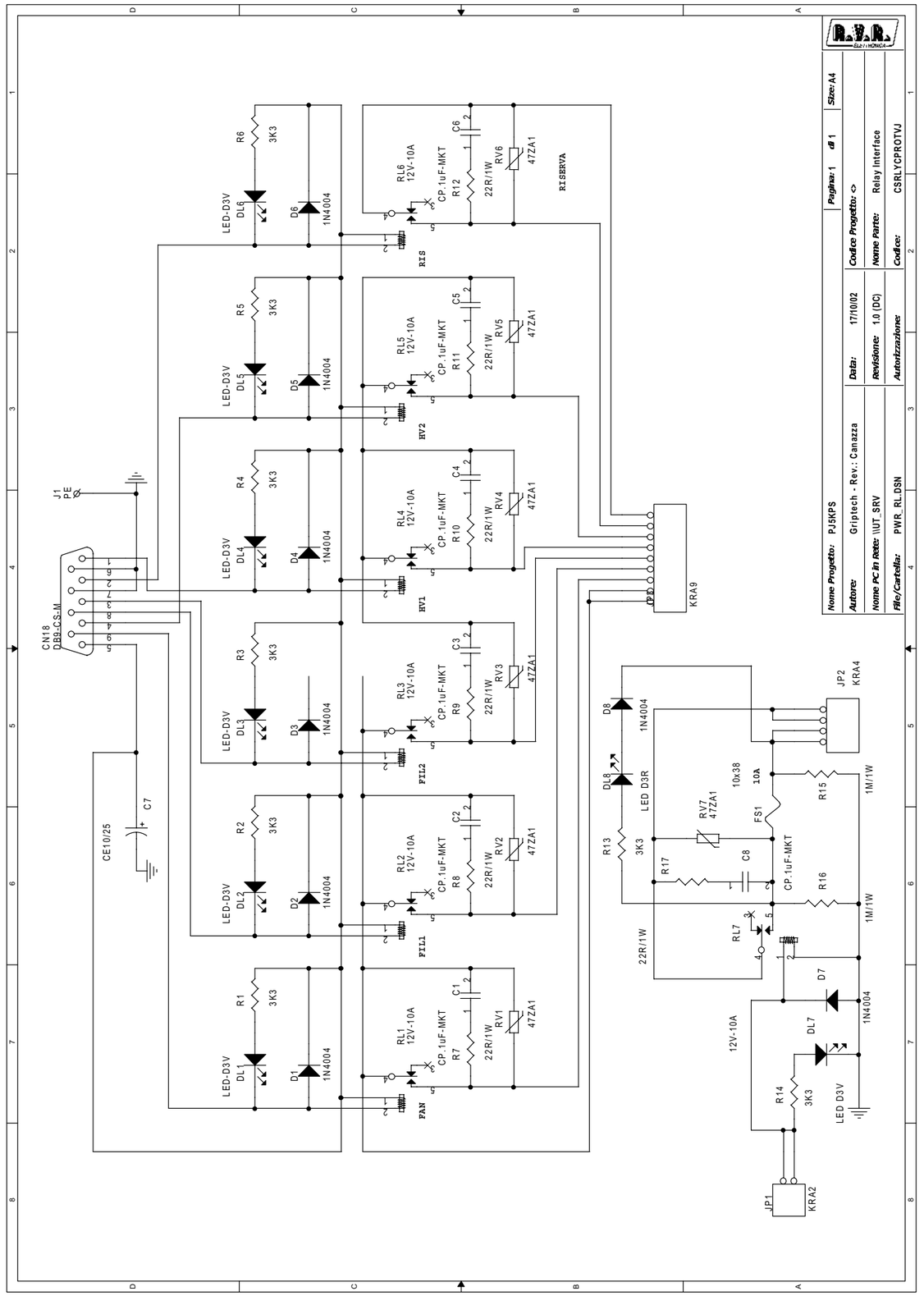

10.6 Input terminals

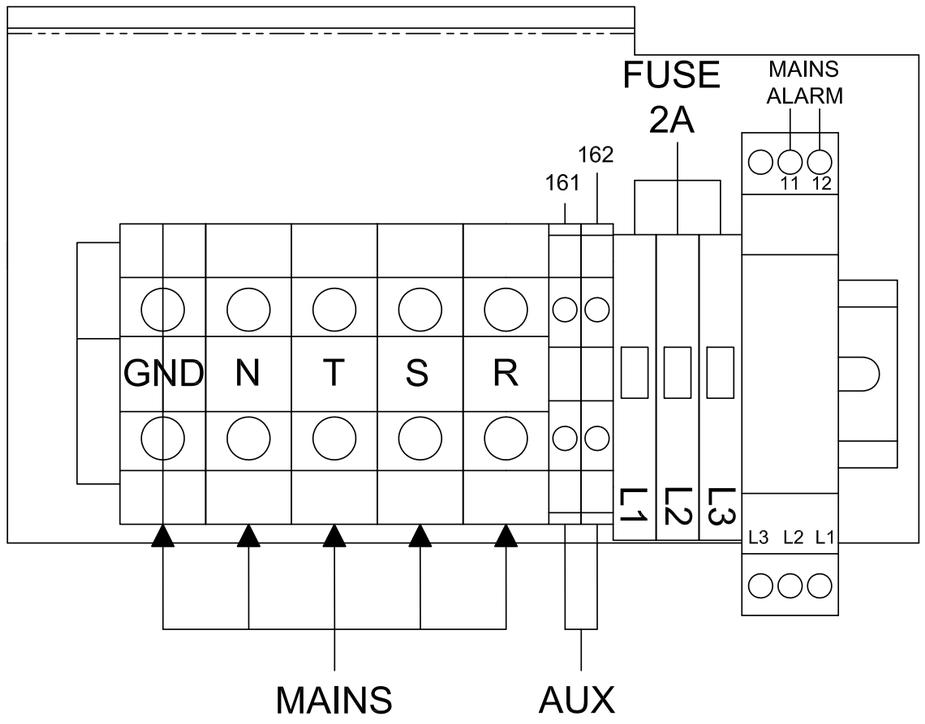

NOTE: NOTE: terminals 161 and 162 have a "free contact" and serves to enable an external exhaust fan when starts working the suction blower inside the machine.
This contact is activated by the contactors that activates the internal fan (RACK FAN)
FAN OFF - OPEN CONTACT
FAN ON - CLOSE CONTACT

Telecomitalia®	DENOMINAZIONE: Morsettiera di alimentazione Rack H20		
	N° PROGRAMMA: --		MACCHINA: --
SEMILAVORATO: --		AUTORE: Nicolini Daniele	CODICE DISEGNO: MORINGRCKH20
MATERIALE: --	PESO [KG]: 0.65	SCALA: 1:5	REVISIONE: 0
TRATTAMENTO: --	DATA: 10/06/2011		CODICE AS400: –
TOLLERANZA GENERALE SECONDO UNI ISO 2768–f		FORMATO: A4	

10.7 Parallel interface (CSINTREMPJ5K)

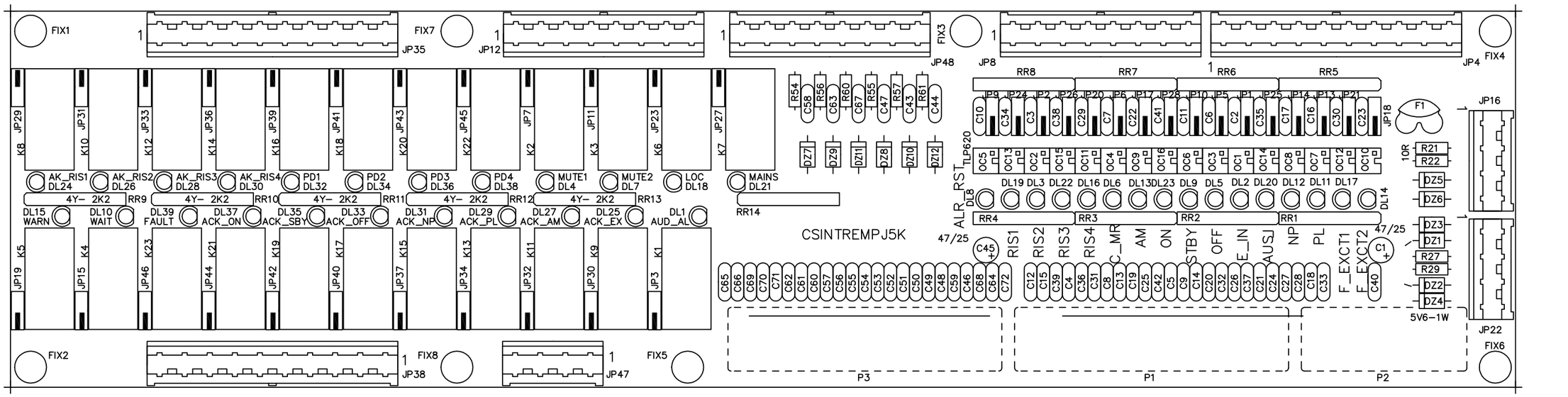

Nome Progetto:	PK5KPS – Interfaccia parallela			Pagina: 1 di 1	Size: A3
Autore:	Griptech – Rev.: Canazza	Data:	08/10/2002	Codice Progetto:	<>
Nome PC in Rete:	\\UT_SRV	Revisione:	1.0 (DC)	Nome Parte:	Interfaccia parallela
File/Cartella:	PJ5_REM_MNT.DWG	Autorizzazione:		Codice:	SLINTREMPJ5K
Scala: <>	Materiale: <>	Trattamento:	<>	Profilo:	<>

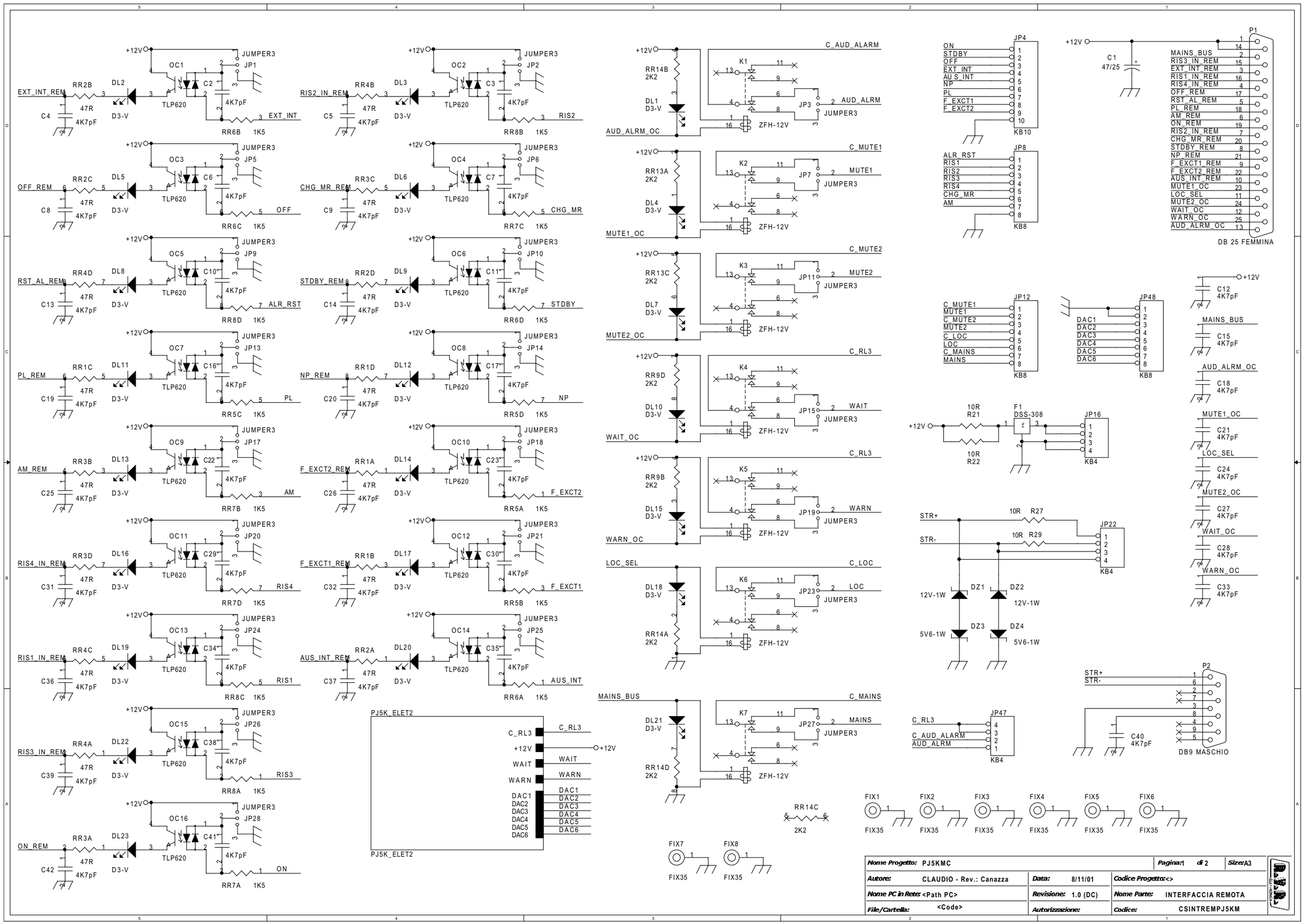

Nome Progetto: PJ5KMC		**Pagina:** 1 di 2	**Size:** A3
Autore: CLAUDIO - Rev.: Canazza	**Data:** 8/11/01	**Codice Progetto:** <>	
Nome PC in Rete: <Path PC>	**Revisione:** 1.0 (DC)	**Nome Parte:** INTERFACCIA REMOTA	
File/Cartella: <Code>	**Autorizzazione:**	**Codice:** CSINTREMPJ5KM	

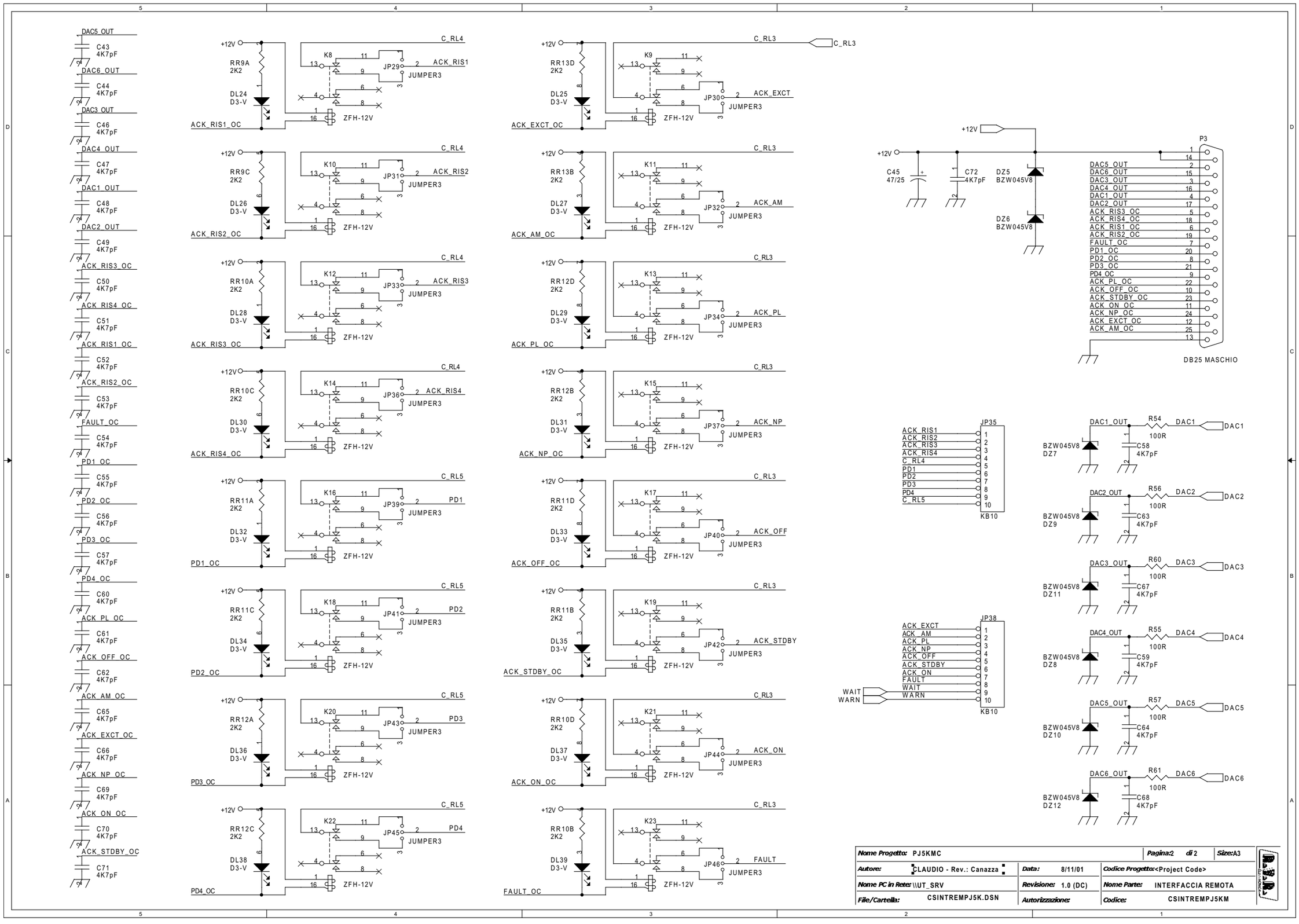
DAC5_OUT
C43 4K7pF
DAC6_OUT
C44 4K7pF
DAC3_OUT
C46 4K7pF
DAC4_OUT
C47 4K7pF
DAC1_OUT
C48 4K7pF
DAC2_OUT
C49 4K7pF
ACK_RIS3_OC
C50 4K7pF
ACK_RIS4_OC
C51 4K7pF
ACK_RIS1_OC
C52 4K7pF
ACK_RIS2_OC
C53 4K7pF
FAULT_OC
C54 4K7pF
PD1_OC
C55 4K7pF
PD2_OC
C56 4K7pF
PD3_OC
C57 4K7pF
PD4_OC
C60 4K7pF
ACK_PL_OC
C61 4K7pF
ACK_OFF_OC
C62 4K7pF
ACK_AM_OC
C65 4K7pF
ACK_EXCT_OC
C66 4K7pF
ACK_NP_OC
C69 4K7pF
ACK_ON_OC
C70 4K7pF
ACK_STDBY_OC
C71 4K7pF
+12V
RR9A 2K2
DL24 D3-V
ACK_RIS1_OC
K8
JP29
JUMPER3
ACK_RIS1
C_RL4
ZFH-12V
RR9C 2K2
DL26 D3-V
ACK_RIS2_OC
K10
JP31
ACK_RIS2
RR10A 2K2
DL28 D3-V
ACK_RIS3_OC
K12
JP33
ACK_RIS3
RR10C 2K2
DL30 D3-V
ACK_RIS4_OC
K14
JP36
ACK_RIS4
RR11A 2K2
DL32 D3-V
PD1_OC
K16
JP39
PD1
C_RL5
RR11C 2K2
DL34 D3-V
PD2_OC
K18
JP41
PD2
RR12A 2K2
DL36 D3-V
PD3_OC
K20
JP43
PD3
RR12C 2K2
DL38 D3-V
PD4_OC
K22
JP45
PD4
RR13D 2K2
DL25 D3-V
ACK_EXCT_OC
K9
JP30
ACK_EXCT
C_RL3
RR13B 2K2
DL27 D3-V
ACK_AM_OC
K11
JP32
ACK_AM
RR12D 2K2
DL29 D3-V
ACK_PL_OC
K13
JP34
ACK_PL
RR12B 2K2
DL31 D3-V
ACK_NP_OC
K15
JP37
ACK_NP
RR11D 2K2
DL33 D3-V
ACK_OFF_OC
K17
JP40
ACK_OFF
RR11B 2K2
DL35 D3-V
ACK_STDBY_OC
K19
JP42
ACK_STDBY
RR10D 2K2
DL37 D3-V
ACK_ON_OC
K21
JP44
ACK_ON
RR10B 2K2
DL39 D3-V
FAULT_OC
K23
JP46
FAULT
ZFH-12V
JUMPER3
C45 47/25
C72 4K7pF
DZ5 BZW045V8
DZ6 BZW045V8
P3
DB25 MASCHIO
JP35
KB10
JP38
WAIT
WARN
DAC1_OUT
R54 100R
DAC1
BZW045V8 DZ7
C58 4K7pF
DAC2_OUT
R56 100R
DAC2
BZW045V8 DZ9
C63 4K7pF
DAC3_OUT
R60 100R
DAC3
BZW045V8 DZ11
C67 4K7pF
DAC4_OUT
R55 100R
DAC4
BZW045V8 DZ8
C59 4K7pF
DAC5_OUT
R57 100R
DAC5
BZW045V8 DZ10
C64 4K7pF
DAC6_OUT
R61 100R
DAC6
BZW045V8 DZ12
C68 4K7pF
Nome Progetto: PJ5KMC
Pagina: 2 di 2
Size: A3
Autore: CLAUDIO - Rev.: Canazza
Data: 8/11/01
Codice Progetto: <Project Code>
Nome PC in Rete: \\UT_SRV
Revisione: 1.0 (DC)
Nome Parte: INTERFACCIA REMOTA
File/Cartella: CSINTREMPJ5K.DSN
Autorizzazione:
Codice: CSINTREMPJ5KM

10.7.1 Description

A parallel-type interface is mounted on the top of the TX20000U-KLC, in which the different signals are available through terminal blocks (Figure 10-7-1). This interface is connected to the CCU from which it receives the different signals and to which the eventual commands are forwarded.
The card contains digital inputs, digital outputs and analog outputs. Among the digital inputs, a “copy” of all the possible orders that can be given locally to the unit by using the buttons of the control unit are displayed.

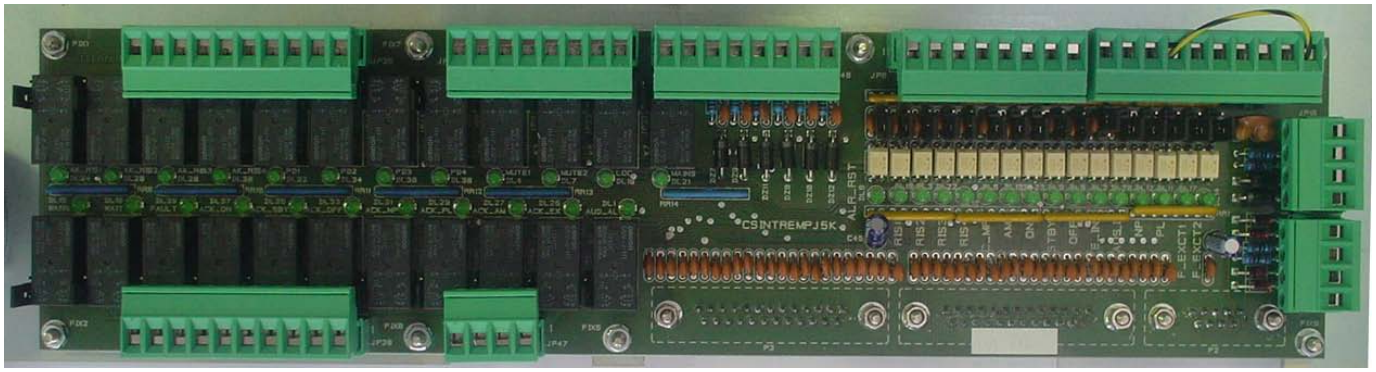

Figure 10-7-1

The digital outputs supply information concerning the status of the TX20000U-KLC.
The analogue outputs enable the remote control of the most important parameters, for example the forward and reflected power.
This interface was designed for a maximum configurability and adaptability to the tel metry systems to which it may be connected. For example, each digital input can be configured through a jumper in order to be “active” when grounded or when connected to a supply source between +12V and +24V.
The scheme of one generic digital input is shown in Figure 10-7-2 b). Please pay attention to the anti-parallel type optocouplers, so that if the jumper is closed between the pins 1 and 2, by grounding the DIGITAL INPUT, the input is active. On the contrary by closing 2 and 3, the input is active when the DIGITAL INPUT is connected to a positive voltage.
Each digital output can be configured individually as “Normally open “ or “Normally closed “ (NO or NC). In Figure 10-7-2 a) the scheme of a generic digital output is shown. Please note that when the jumper is closed between 1 and 2, the output is normally short-circuited with the common pin, while in the other case the circuit is normally open.
It is important to remember that the different commands can be given to the unit through the parallel interface only if the Local/Remote selector situated on the front panel is on the “Remote” position.

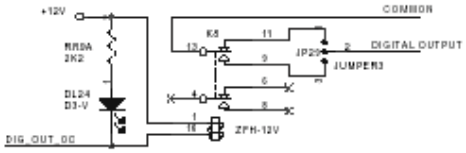

a)

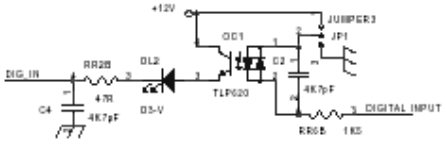

b)

Figure 10-7-2

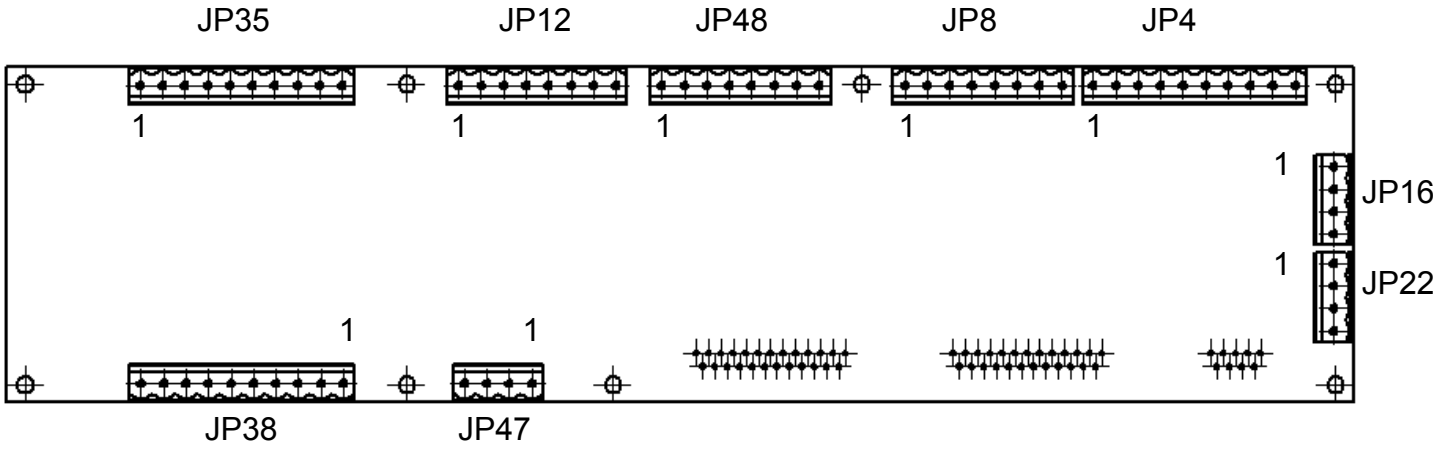

Figure 10-7-3

The following table describes the function of each jumper of the parallel interface. The first column indicates the identifying number of the jumper as shown on Figure 10-7-3, the second indicates the name of the signal and the third column describes its function.

Clamp	Type	Name	Description
JP4/1	In	ON	Corresponds to the ON button of the control unit
JP4/2	In	STDBY	Corresponds to the STDBY button of the control unit
JP4/3	In	OFF	Corresponds to the OFF button of the control unit
JP4/4	In	EXT INH	External inhibition jumper. It is a “N.C.” type jumper, which means that it must be active for the TX20000U-KLC to work. Upon delivery, this terminal is closed to ground by a jumper.
JP4/5	In	AUX INH	Auxiliary external inhibition jumper. It is a “N.O.” type jumper,which means that it must be not active for the TX20000U-KLC to work. It is “auxiliary” because even if nothing is connected to it the TX20000U-KLC works normally.
JP4/6	In	NOM PWR	Corresponds to the NOMINAL POWER button of the control unit

JP4/7	In	LOW PWR	Corresponds to the REDUCED POWER button of the control unit
JP4/8	In	AUDIO ALARM EXC. 1	Audio alarm of exciter 1. This input, when active, indicates an alarm on exciter 1. If the TX20000U-KLC is in automatic changeover modality, if the exciter 1 is on air and if this signal remains active for a time lag equivalent to the time setted in the Settings menu at line Exc. Wait time, the changeover procedure between the exciters will be started.
JP4/9	In	AUDIO ALARM EXC. 2	Same as AUDIO ALARM EXC. 1 for exciter 2.
JP4/10	/	GND	Grounding contact.
JP8/1	In	ALARM RESET	Corresponds to the ALARM RESET button on the control unit
JP8/2	In	RESRV. 1	Reserve 1 input. When this input is active, the failure is registered by the software in the Alarms menu. For example it can be connected to a switch that indicates that the door of the station is open or to a sensor of a power reserve of an electric generator. In this way, by consulting the menus of the unit, it is possible to trace the moment at which (time and date) the failure occurred.
JP8/3	In	RESRV. 2	Same as JP8/2
JP8/4	In	RESRV. 3	Same as JP8/2
JP8/5	In	RESRV. 4	Same as JP8/2
JP8/6	In	EXCITER CHANGEOVER CMD	This command launches the changeover procedure between the exciters. It has the same function as when you press the OK button when selecting line On air exciter in the menu Exciters. In order to launch the changeover between the exciters through this command, the manual changeover modality should be formerly selected through the correspondent button on the control unit or through the JP8/7 jumper, having however the unit in “Remote” modality.
JP8/7	In	EXCITER CHANGEOVER	Corresponds to ther EXCITER CHANGEOVER button of the control unit
JP8/8	/	GND	Ground
JP16/1	Out	+12V dc	Power source. A maximum of 100 mA can be absorbed between this jumper and JP16/2. This power source can be used if the user wants to enter the comands following a positive logic (high voltage - active comand)
JP16/2	Out	+12V dc	Same as JP16/1
JP16/3	/	GND	Ground
JP16/4	/	GND	Ground
JP22/1	I/O	TX/RX +	Bus RS 485. Please note that this serial port is operational only when the unit is in “Remote” modality.

JP22/2	I/O	TX/RX -	Bus RS 485
JP22/3	/	LINE TRM	Line termination for bus RS 485
JP22/4	/	LINE TRM	Line termination for bus RS 485
JP48/1	/	GND	Ground
JP48/2	/	GND	Ground
JP48/3	Out	FWD PWR	Forward power. Analogical output, 3.9V for 5000W
JP48/4	Out	RFL PWR	Reflect power. Analogical output, 3.9V for 1200W
JP48/5	Out	OUT AIR TEMP	Temperature of the air at the output of the chimney. Analogical output, 0V for -50°C, 3.9V for 100°C
JP48/6	Out	/	Not used
JP48/7	Out	EFF.	General efficiency. Analogical output, 3.9V for 100%, 0V for 0%.
JP48/8	Out	OUT DAC 6	Reserved for future applications.
JP12/1	Out	CMN MUTE 1	Common contact MUTE 1 (see JP12/2).
JP12/2	Out	MUTE 1	MUTE excitater 1. Digital output, active when exciter 1 is inhibited by the control unit. Like all the digital outputs on the parallele interface, it can be configurated through jumper as normally open or normally closed. This output has a common contact dedicated to this function (JP12/1).
JP12/3	Out	CMN MUTE 2	Common contact MUTE 2 (see JP12/4).
JP12/4	Out	MUTE 2	MUTE exciter 2. Digital output, active when exciter 2 is inhibited by the control unit. This output has a common contact dedicated to this function (JP12/3).
JP12/5	Out	CMN LOCAL	Common contact LOCAL (see JP12/6).
JP12/6	Out	LOCAL	LOCAL/REMOTE status. Digital output, active when the TX20000U-KLC is setted in local modality. This output has a common contact dedicated to this function (JP12/5).
JP12/7	Out	CMN MAINS	Common contact MAINS (see JP12/8).
JP12/8	Out	MAINS	MAINS alarm, active when are present problems on the alimentation
JP47/1	Out	AUDIO ALARM	“AUDIO” alarm (see JP4/8 and JP4/9). This output is active when the on air exciter is in audio alarm status. This output has a common contact dedicated to this function (JP47/2).
JP47/2	Out	CMN AUDIO ALARM	Common contact AUDIO ALARM (see JP47/1).
JP47/3	Out	CMN RL3	Common contact shared from the outputs JP38/1-10.
JP47/4	Out	CMN RL3	Parallel contact with JP47/3.
JP35/1	Out	RESRV. 1	Reserve 1. Digitale output, active when the INPUT RESERVE 1 input (JP8/2) is active. The common contact of this output is RL4 (JP35/5)
JP35/2	Out	ON PROTF	Pulse output, every minute is activated when the ProtF is ON. The common contact of this output is RL4 (JP35 / 5)
JP35/3	Out	OFF PROTF	Pulse output, every minute is activated when the ProtF is OFF. The common contact of this output is RL4 (JP35 / 5)

JP35/4	Out	RESRV. 4	Same as JP35/1, corresponds to INPUT RESERVE 4. The common contact of this output RL4 (JP35/5)
JP35/5	Out	CMN RL4	Common contact shared between different digital outputs (JP35/1-4)
JP35/6	Out	SET1.	Digital output, active when the parameter SET1 is active (see menu Settings). The common contact of this output RL5 (JP35/10).
JP35/7	Out	SET2.	Same as JP36/6, corresponds to SET2. The common contact of this output is RL5 (JP35/10).
JP35/8	Out	SET3.	Same as JP36/6, corresponds to SET3. The common contact of this output is RL5 (JP35/10).
JP35/9	Out	SET4.	Similar to JP36/6, related to SET4. The common contact of this output is the RL5 (JP35/10).
JP35/10	Out	CMN RL5	Common contact shared between the different digital output (JP35/6-9)
JP38/1	Out	EXC. ON AIR	Digital output, active when the exciter 1 is on air, and not active when the exciter 2 is on air. common contact of this output is the RL3 (JP47/3).
JP38/2	Out	AUTO/MAN	Digital output, active when the TX20000U-KLC is in changeover mode as regards the exciters. The common contact of this output is RL3 (JP47/3).
JP38/3	Out	LOWER POWER	Digital output, active when the TX20000U-KLC is set for the lower power level. Common contact of this output is the RL3 (JP47/3).
JP38/4	Out	NOMINAL POWER	Digital output, active when the TX20000U-KLC is set for the nominal power level. common contact of this output is the RL3 (JP47/3).
JP38/5	Out	OFF	Digital output, active when the TX20000U-KLC is set for the lower power level. The common contact of this output is the RL3 (JP47/3).
JP38/6	Out	STDBY	Digital output, active when the TX20000U-KLC is set for the lower power level. The common contact of this output is the RL3 (JP47/3).
JP38/7	Out	ON	Digital output, active when the TX20000U-KLC is set on ON mode. The common contact of this output is the RL3 (JP47/3).
JP38/8	Out	FAULT	Digital output, active when the TX20000U-KLC is set on FAULT mode. The common contact of this output is the RL3 (JP47/3).
JP38/9	Out	WAIT	Digital output, active when the TX20000U-KLC is set on WAIT mode. The common contact of this output is the RL3 (JP47/3).
JP38/10	Out	WARNING	Digital output, active when the TX20000U-KLC is set on WARNING mode. The common contact of this output is the RL3 (JP47/3).

10.8 Plate connectors

Ilme male connector, input liquid level alarm of the external unit

N female connector GSM antenna (opz.)

VDE pan for UPS connection.
If you do not have a UPS, make a bridge.

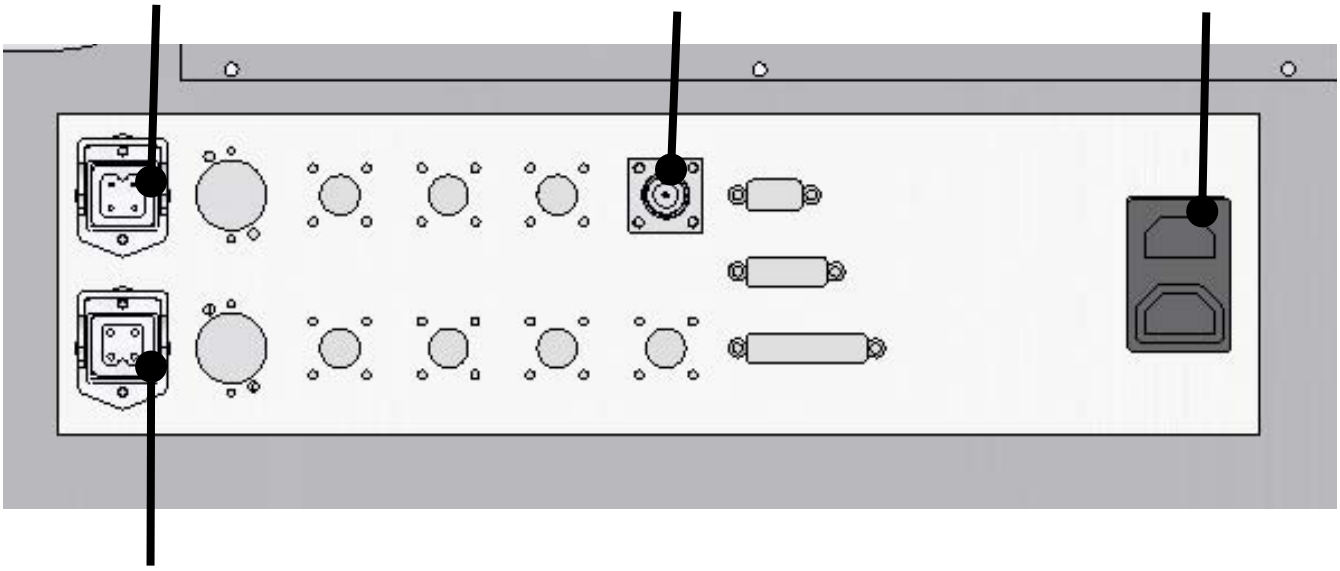

Ilme female connector for power supply fan/s of the external unit

Pinout ilme male alarm input

Pin	Cable color	Description
1	Brown	Minimum level of liquid in the tank
2	Yellow	Common +12V
3	White	Empty tank
GND	Green	Common ground

Pinout ilme female power supply fan/s

Pin	Cable color	Description
1	Black	Fan 1 phase
2	Blue	Common neutral
3	Gray	Fan 2 phase
GND	Yellow-green	Common ground

10.9 Hybrid coupler 1 and 2 (COUP3DB5KT)

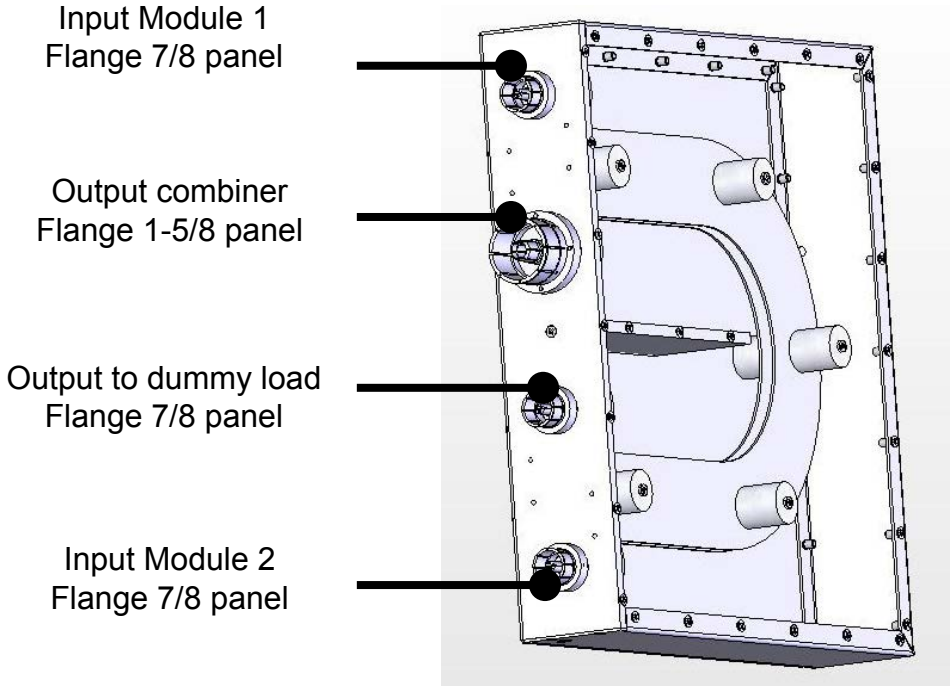

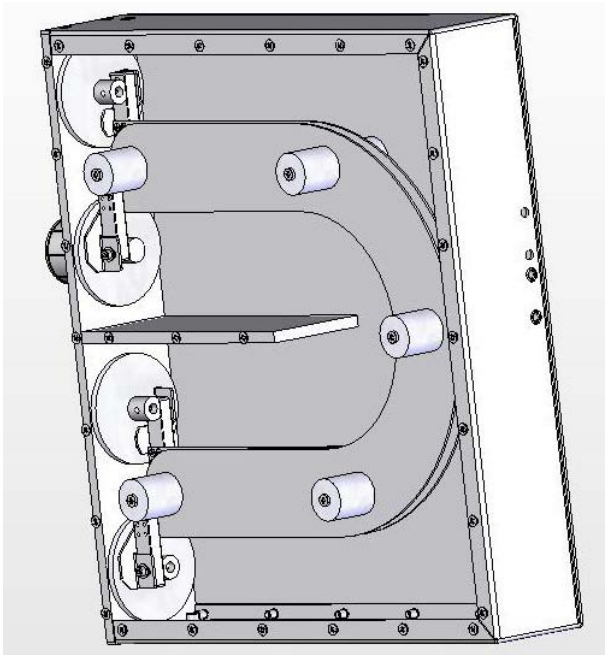

Inside view

10.10 Hybrid coupler 3 (COUP3DB20KM)

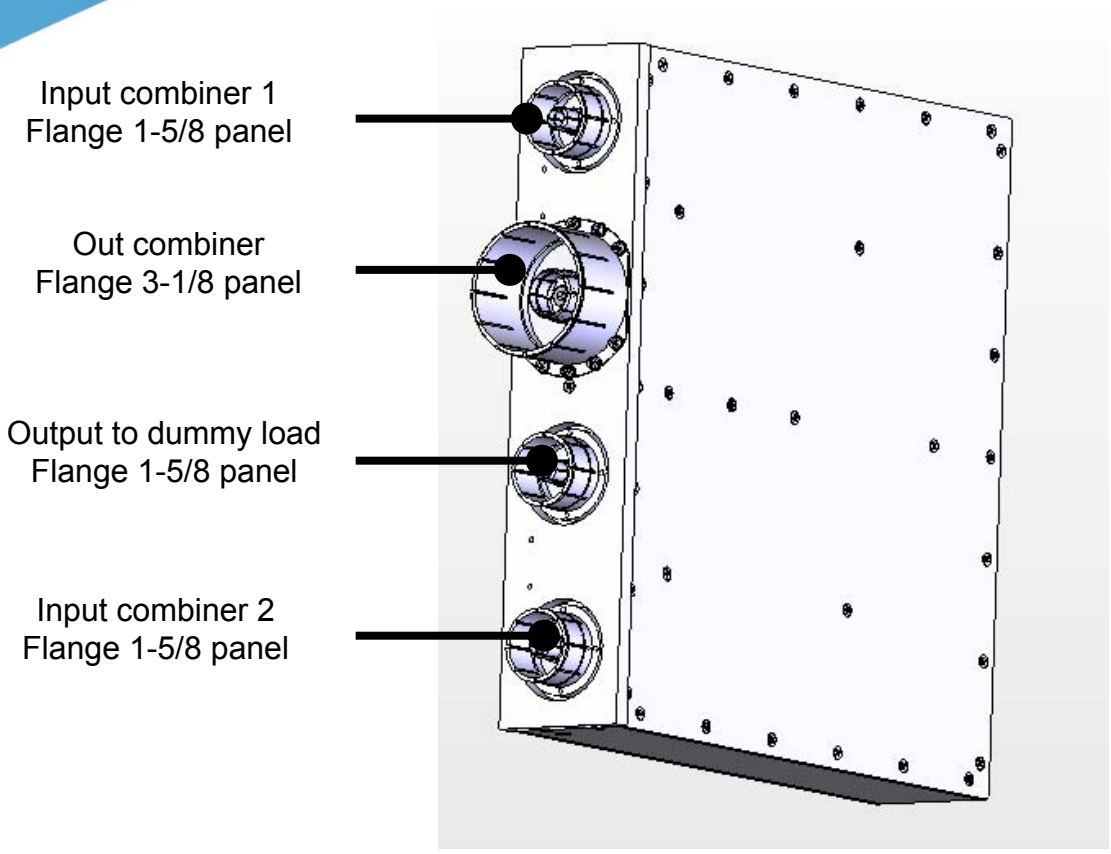

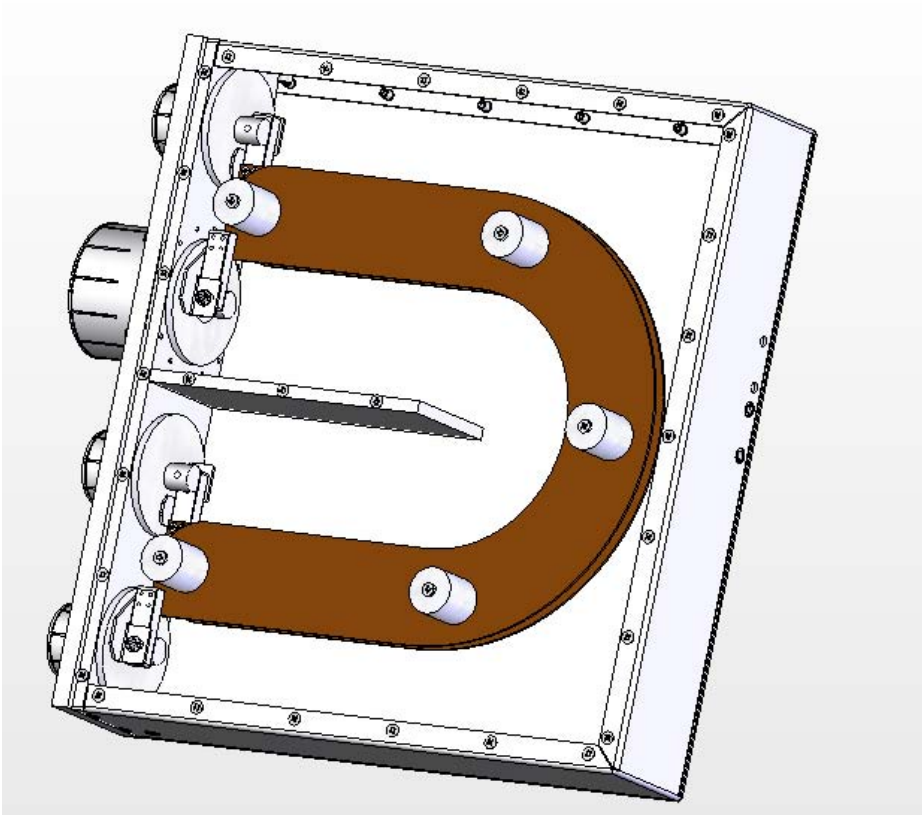

Inside view

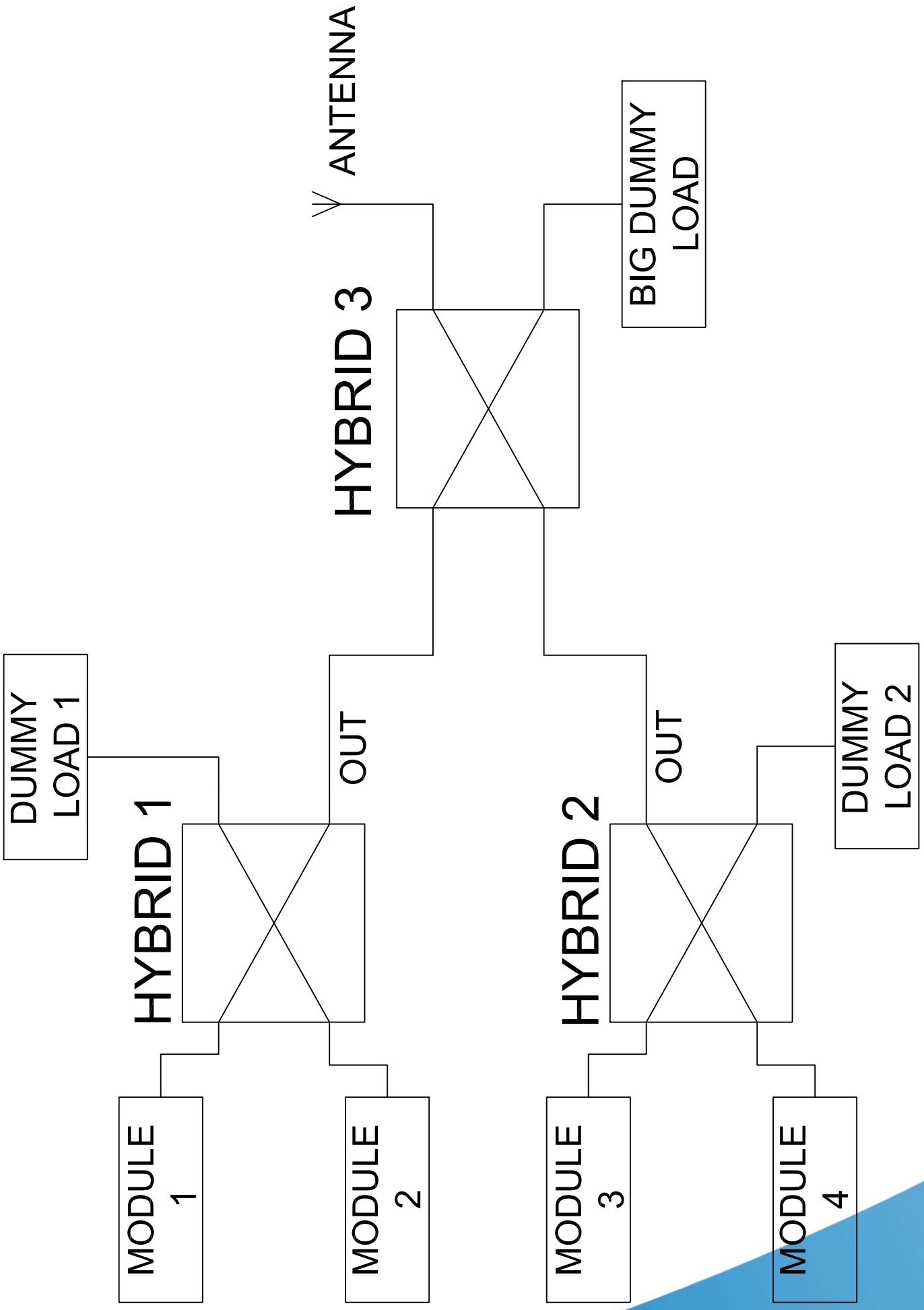
ANTENNA
BIG DUMMY LOAD
HYBRID 3
DUMMY LOAD 1
OUT
OUT
DUMMY LOAD 2
HYBRID 1
HYBRID 2
MODULE 1
MODULE 2
MODULE 3
MODULE 4

10.11 Dummy load 1 and 2 (PF1KDI5KWH2O)

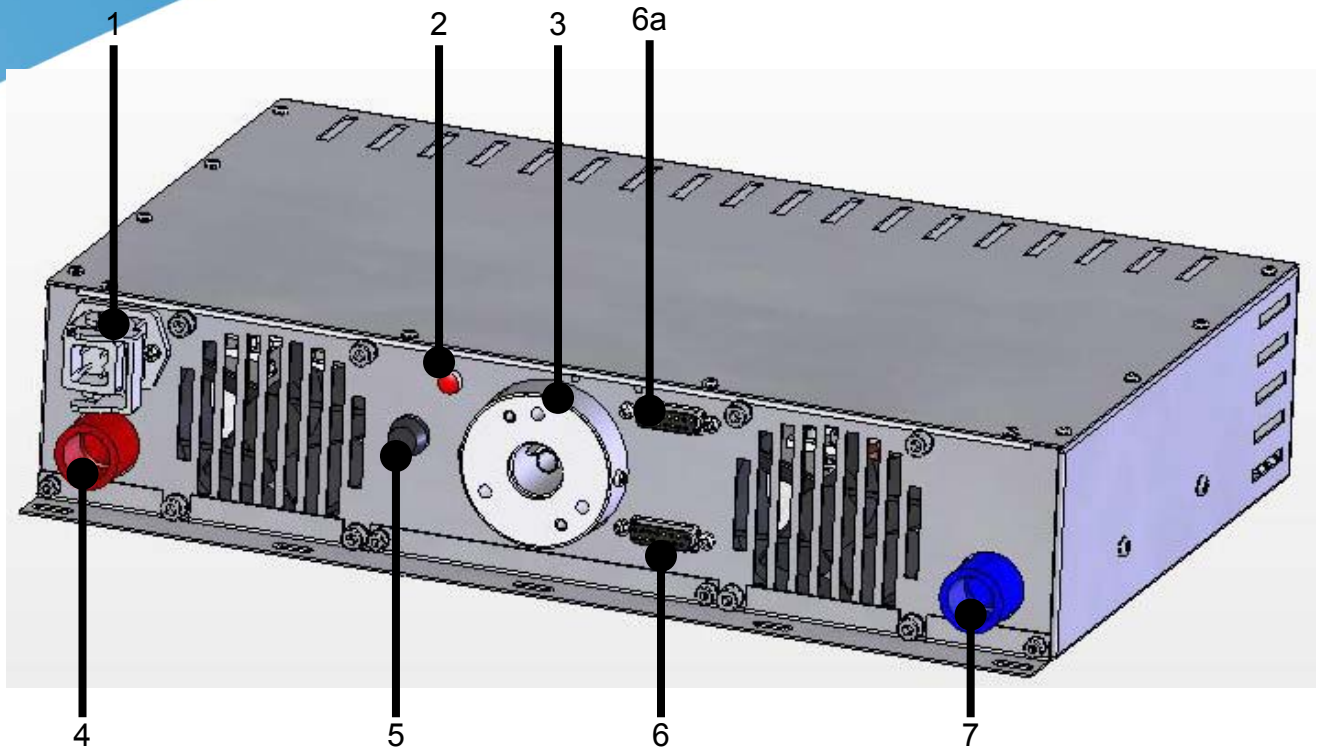

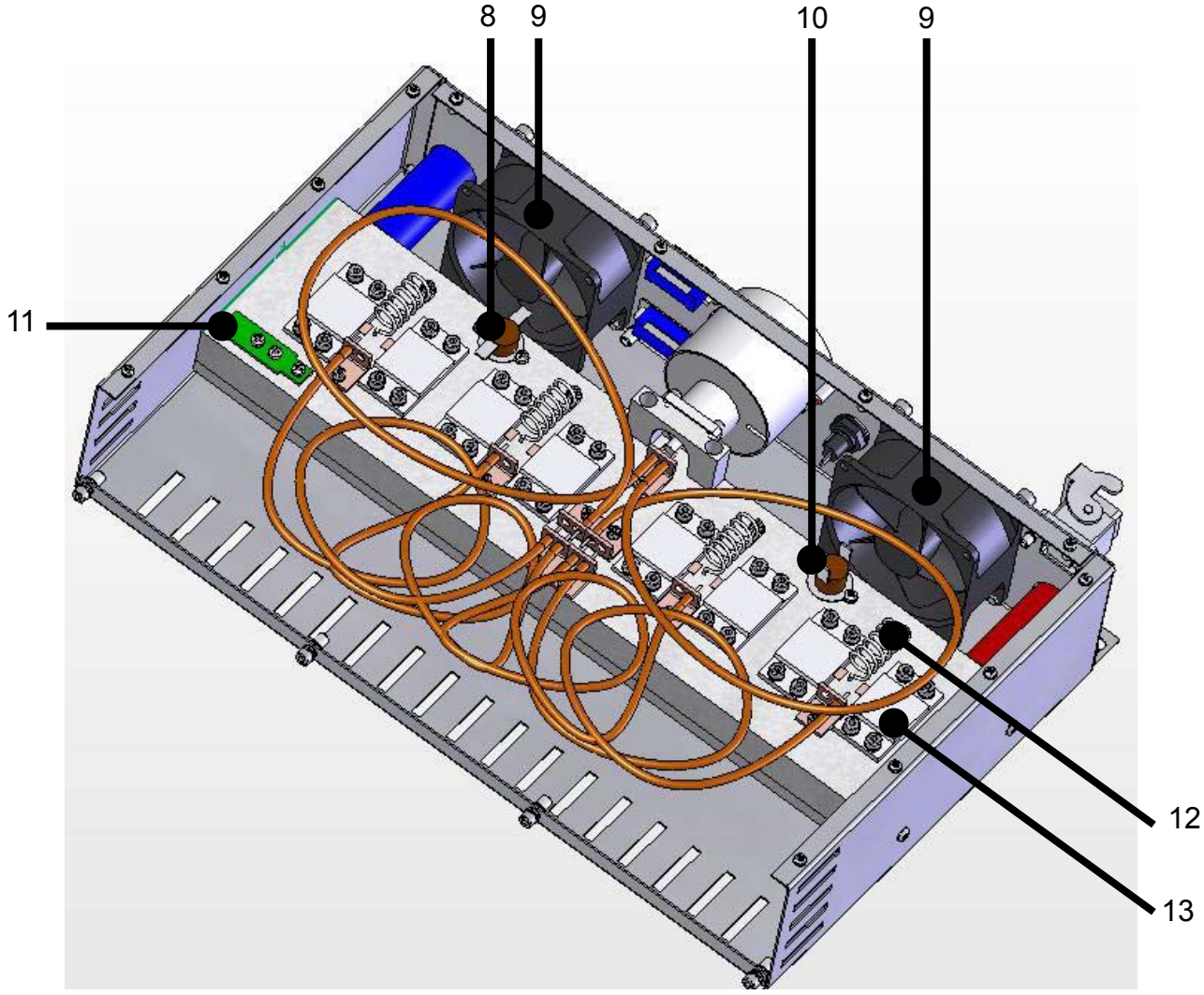

1	Plug for mains power supply	/
2	Voltage presence indicator lamp	/
3	RF input connector (7/8” EIA flange)	/
4	Hydraulic connector for the input of liquid cooling (1/2 “)	/
5	Protection fuse fans	2A
6	DB-15 connector for reading power / temperature	/
6a	DB-15 connector for reading power / temperature of the other dummy loads*	*[Only available in LOAD 2]
7	Hydraulic connector for the output of liquid cooling (1/2 “)	/
8	Temperature sensor 120° NC	SETBIMET120NC
9	Fans for ventilation load	VTL8550N
10	Temperature sensor 50° NA	SETBIMET50NA
11	Temperature probe	SLSNDTMPJ5K
12	Compensation coil	BOB01020033A-1
13	KDI resistor 100 Ω 800 W (termination)	RDT800J0100

10.12 Dummy Load 3 - Big Dummy Load (EDL5000-FMLC)

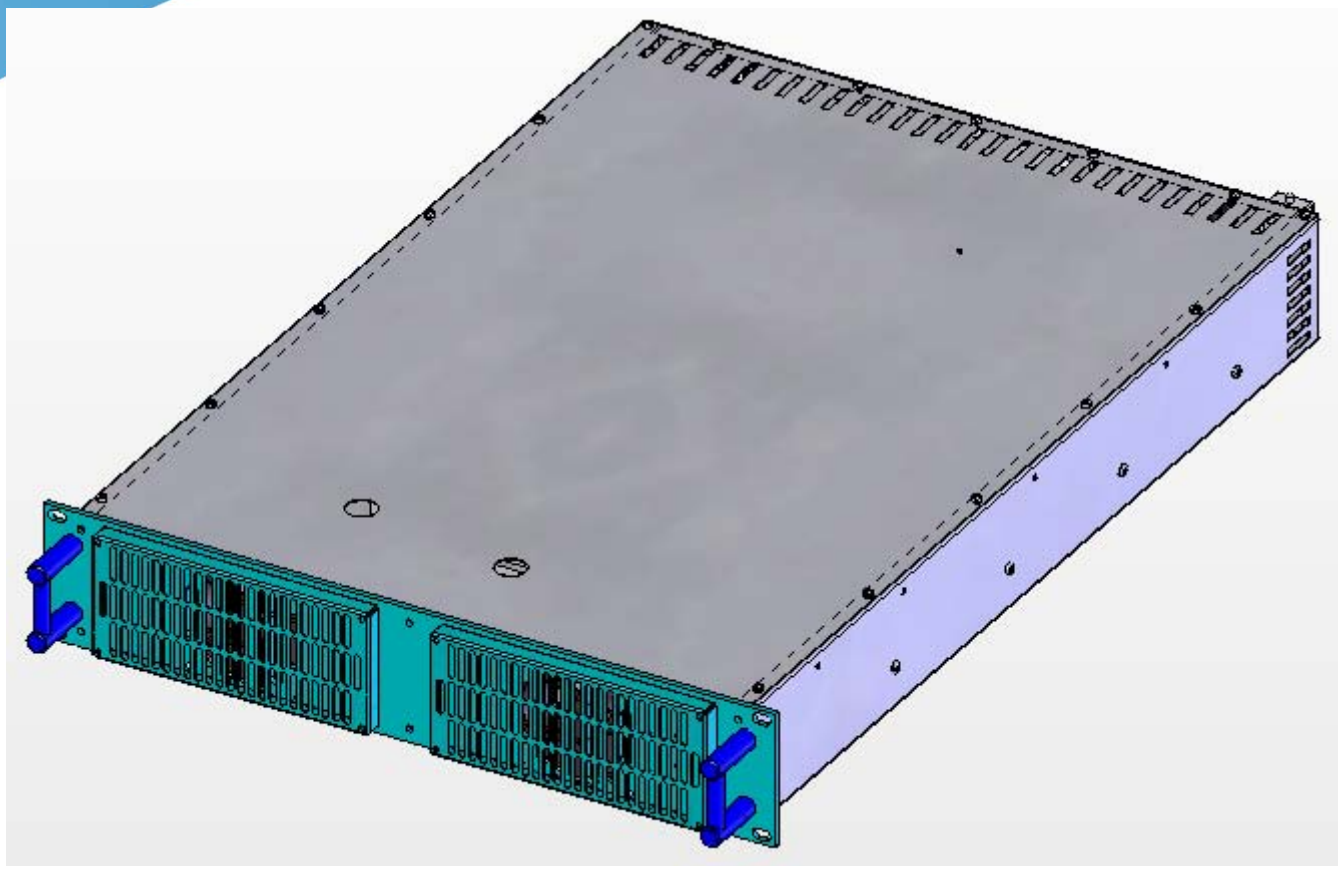

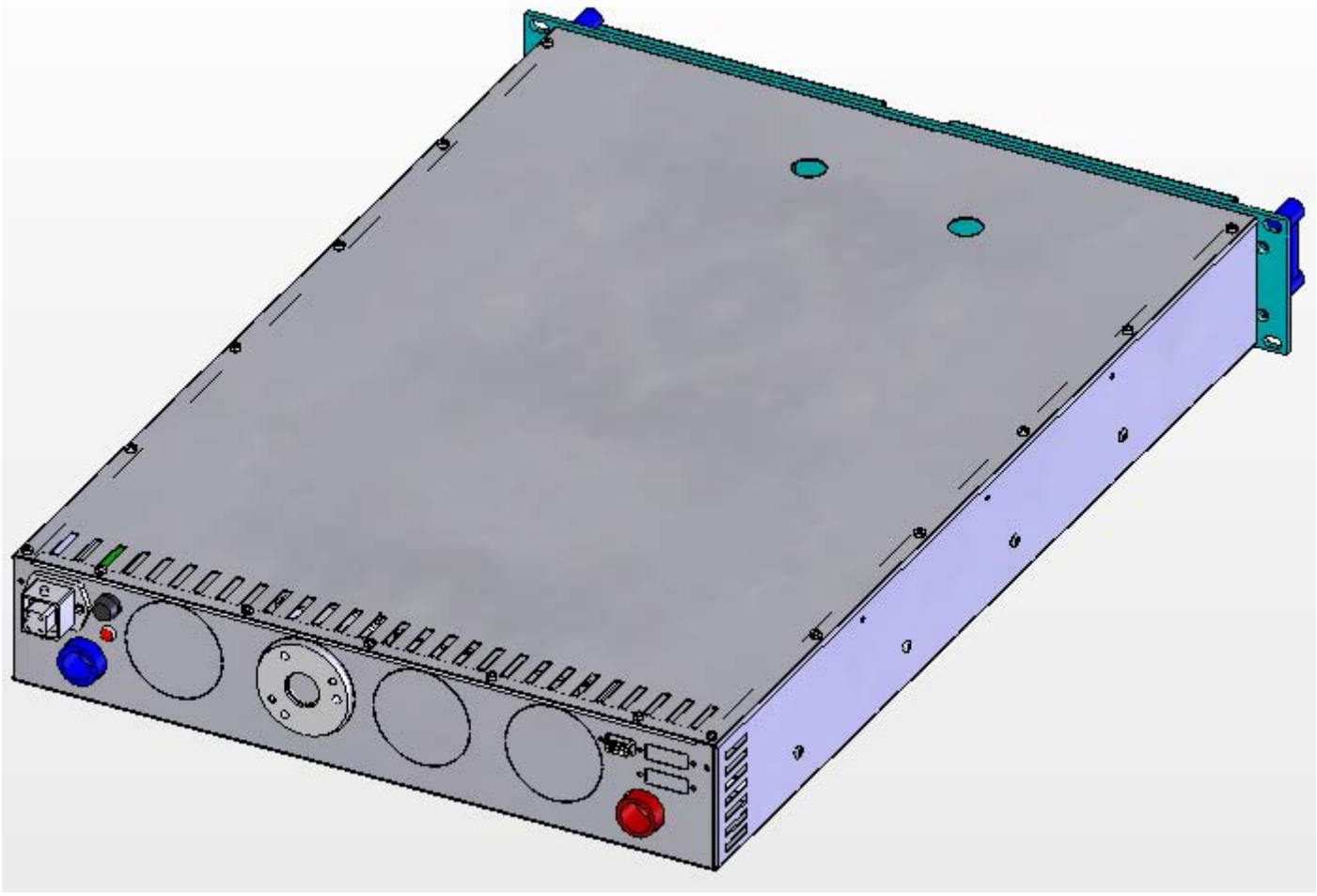

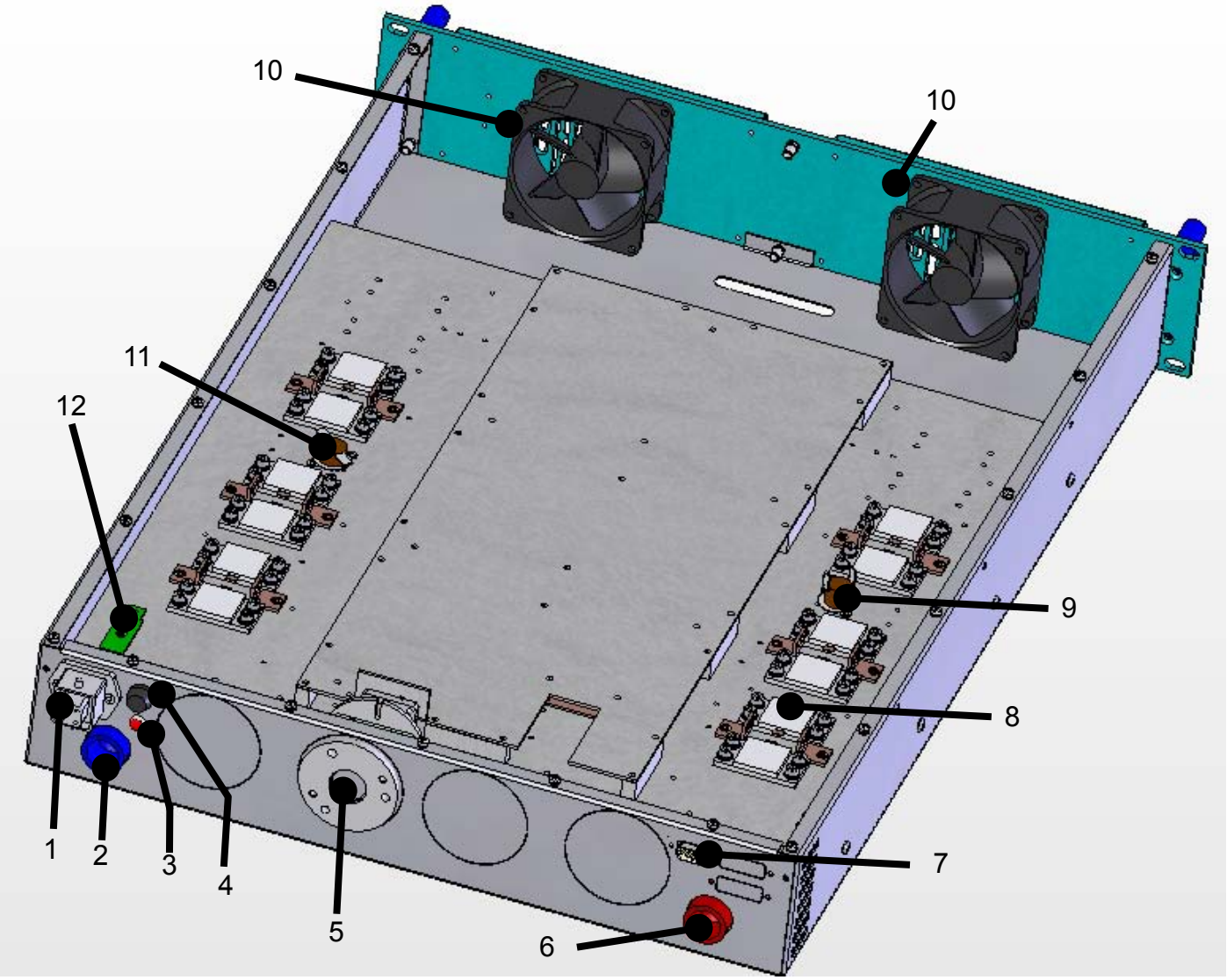

1	Plug for mains power supply	/
2	Hydraulic connector for the input of liquid cooling (1/2 “)	/
3	Voltage presence indicator lamp	/
4	Protection fuse fans	2A
5	RF input connector (1-5/8” EIA flange)	/
6	Hydraulic connector for the output of liquid cooling (1/2 “)	/
7	DB-9 connector for reading power / temperature	/
8	KDI resistor 100 Ω 800 W (termination)	RDT800J0100
9	Temperature sensor 120° NC	SETBIMET120NC
10	Fans for ventilation load	VTL8550N
11	Temperature sensor 50° NA	SETBIMET50NA
12	Temperature probe	SLSNDTMPJ5K

10.13 Vertical hydraulics

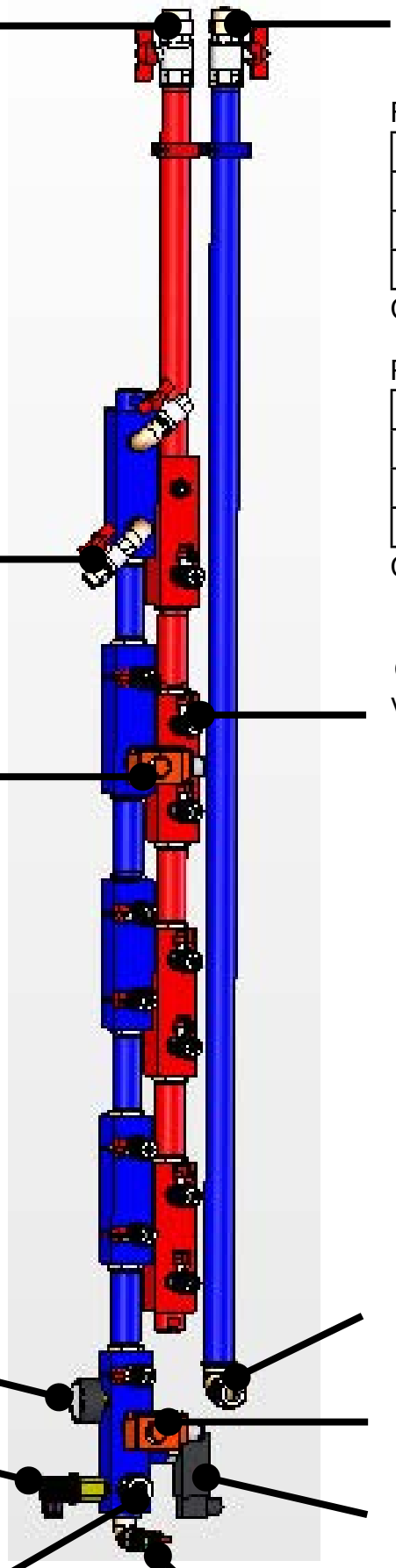

Thermostat 35°- 50° pinout

1	/
2	Blue
C	Brown
GND	Yellow-green

Cod: TERIDRTC2012

Flow switch pinout

1	Brown
2	Blue
3	/
GND	Yellow-green

Cod: FLUIDRMP1002

Pressure switch pinout

1	Brown
2	/
3	Blue
GND	Yellow-green

Cod: PRESPSM10R14

10.14 Carriage pumps (CARPOMP04)

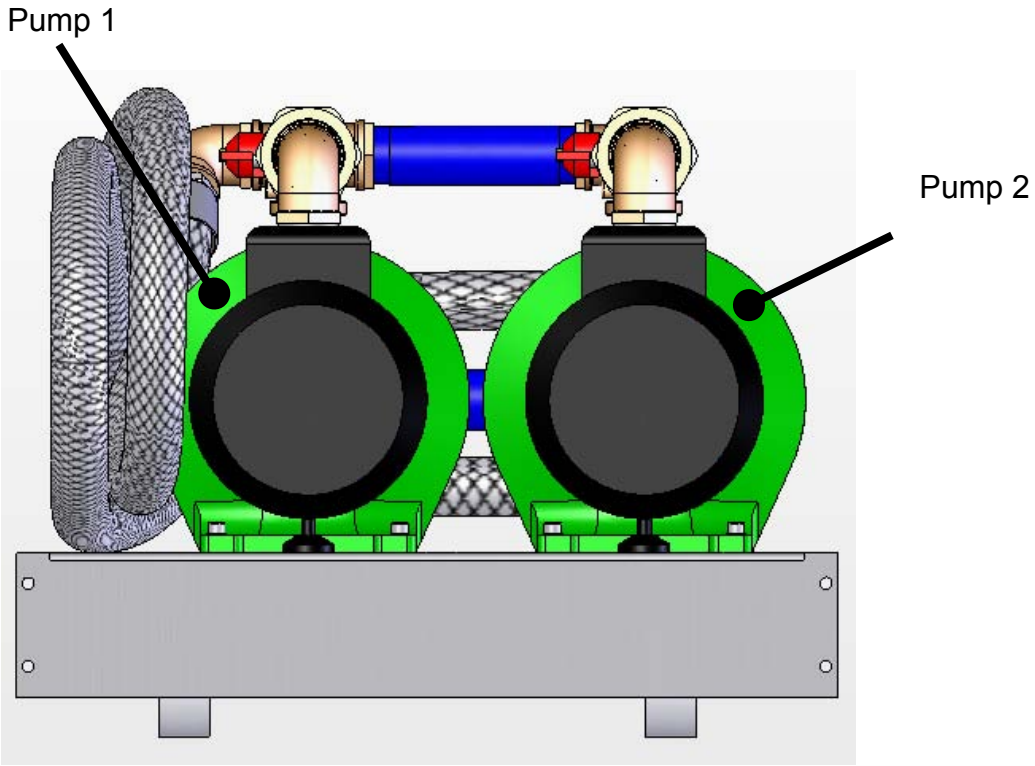

Single pump	POMMHI205DM
Complete carriage	CARPOMP04

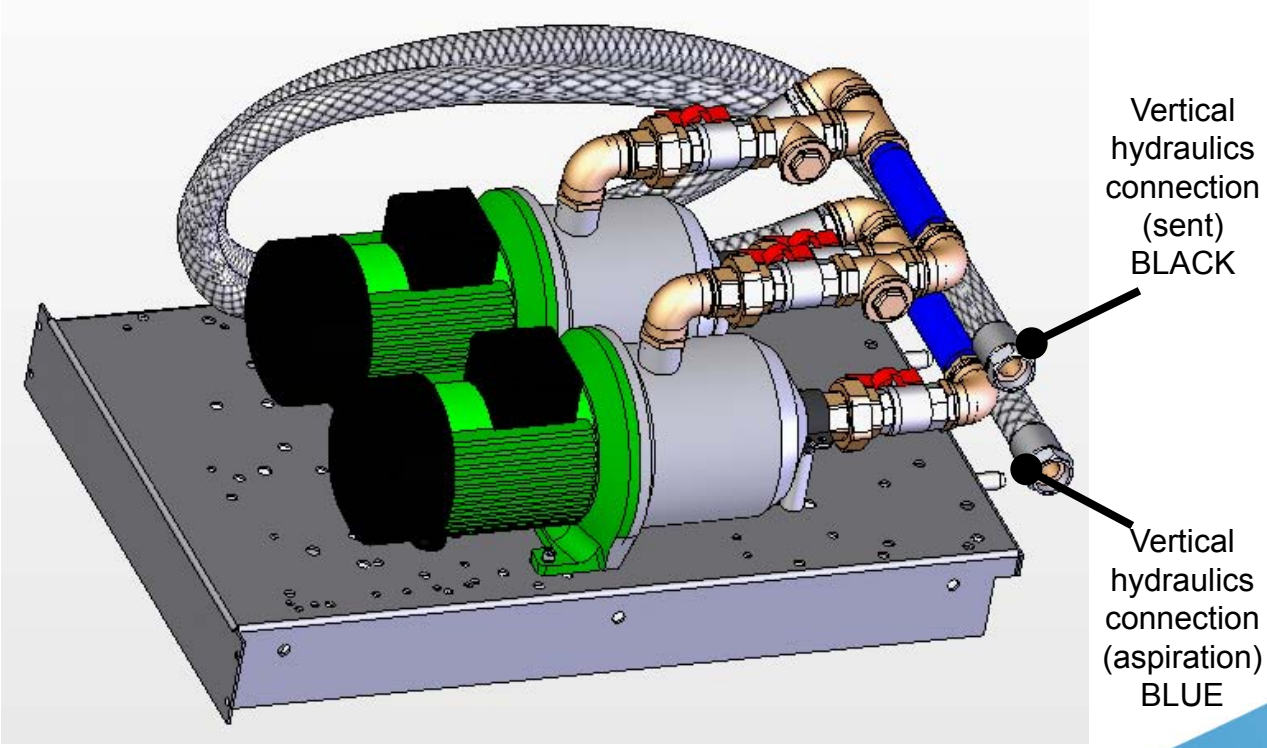

10.15 External unit

Ilme female connector, liquid level alarm

Pin	Cable color	Description
1	Brown	Minimum level of liquid in the tank
2	Yellow	Common +12V
3	White	Empty tank
GND	Green	Common ground

Ilme male connector for power supply fan/s

Pin	Cable color	Description
1	Black	Fan 1 phase
2	Blue	Common neutral
3	Gray	Fan 2 phase
GND	Yellow-green	Common ground

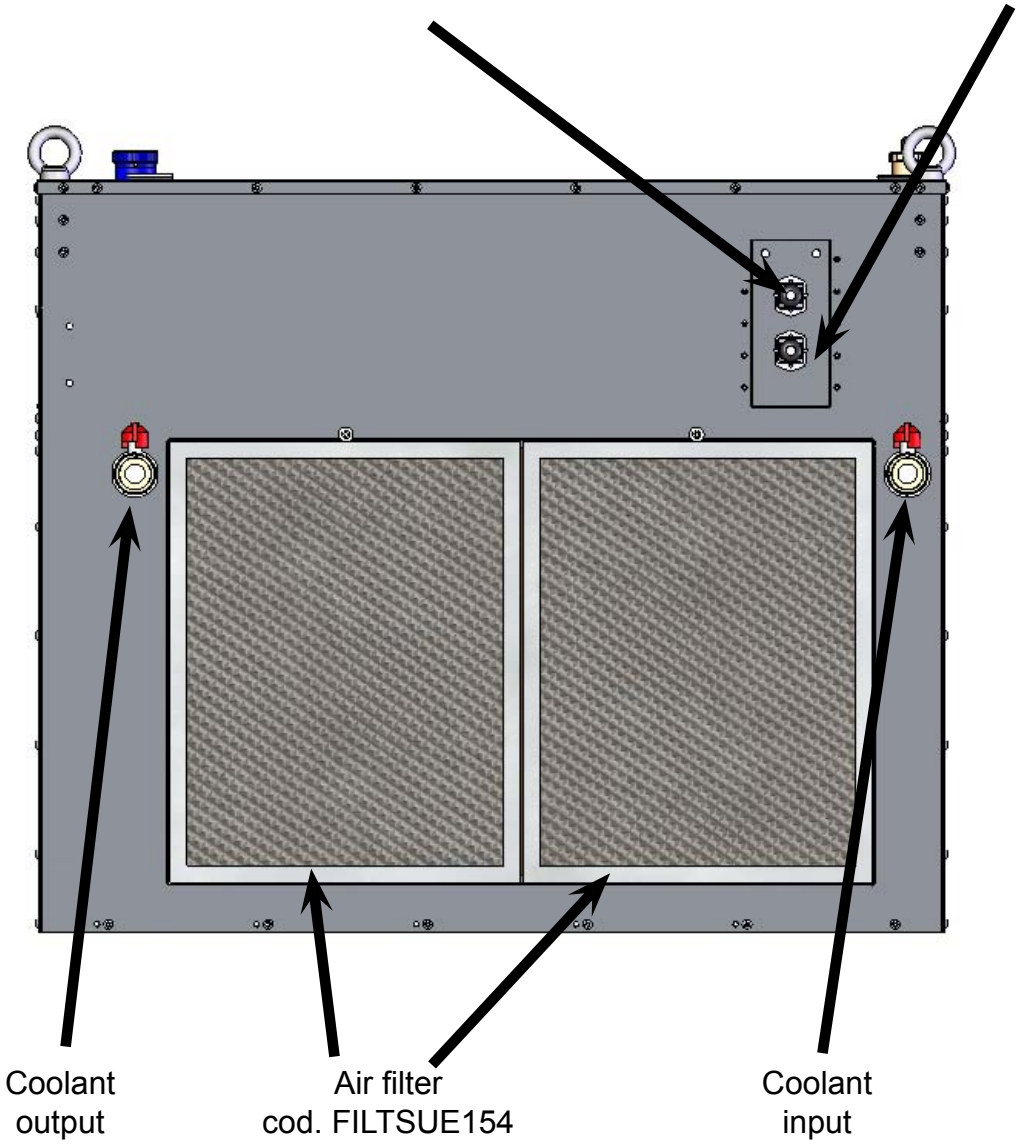

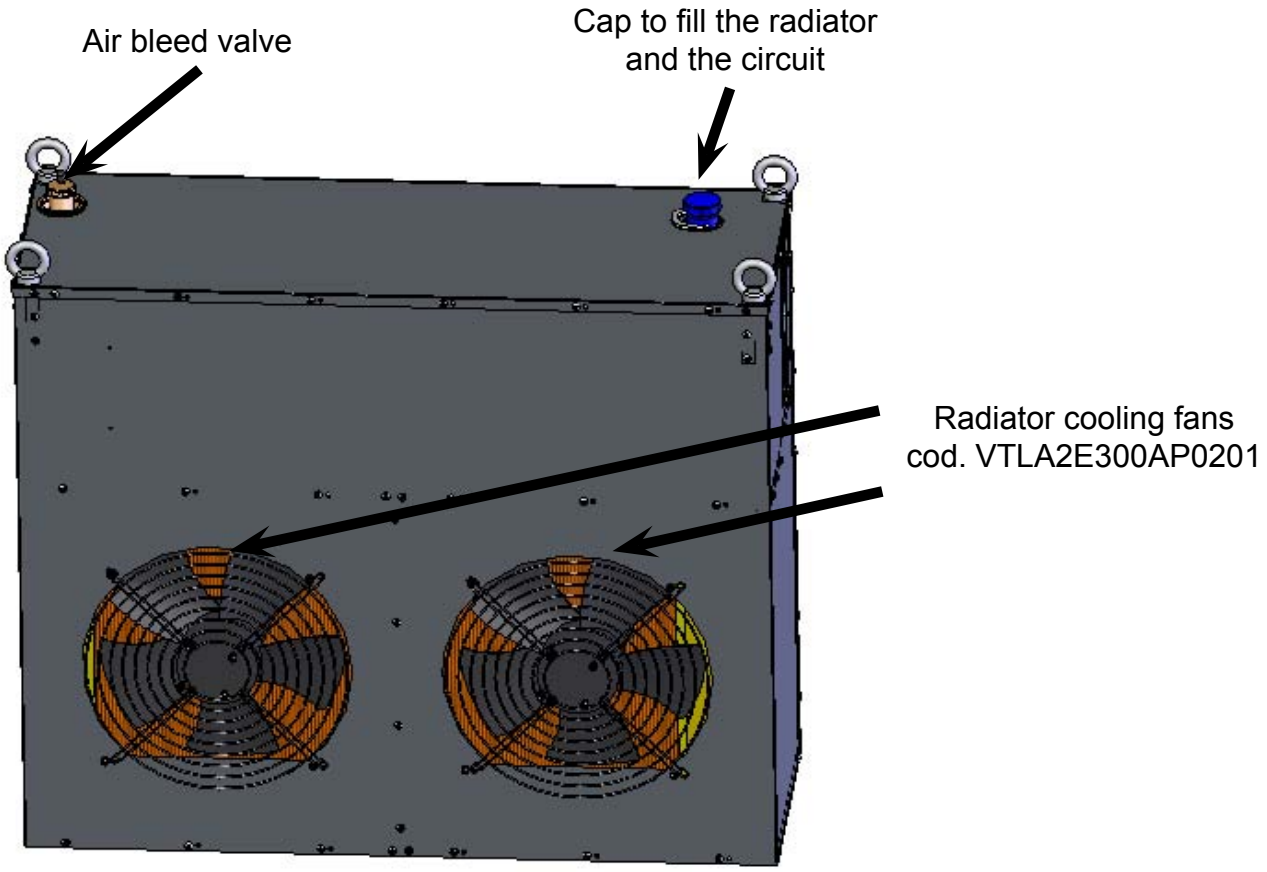
Air bleed valve
Cap to fill the radiator
and the circuit
Radiator cooling fans
cod. VTLA2E300AP0201

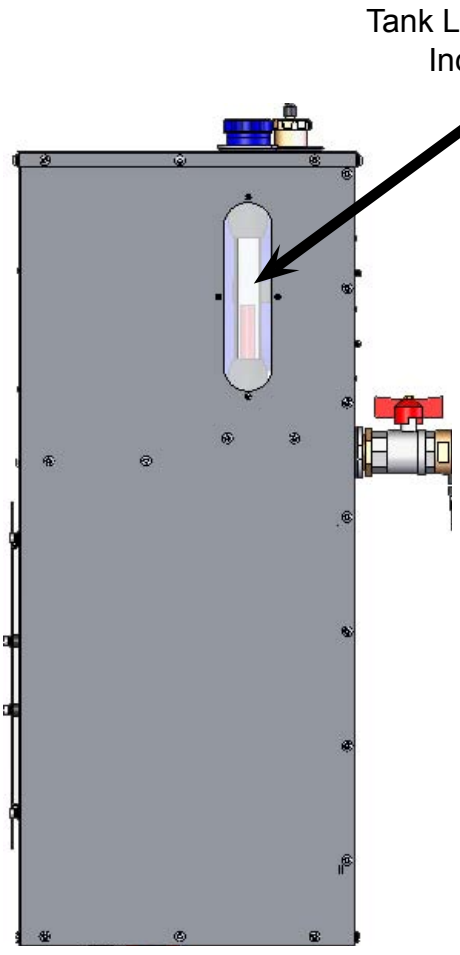
Tank Liquid Level
Indicator

10.16 GSM Telemetry (optional)

R.V.R. Elettronica's plug-in series transmitters, may be optionally fitted with the telemetry device that enables the user to remotely check all the machine's working parameters and control some of them, and provides the transmitter with the ability to trigger "alarms" when problems arise while the transmitter is on air, possibly sending GSM Short Messages (SMS) to the maintainer's cellular phone or to any other number stored in the machine's memory.
The telemetry is installed in front of the rack of the transmitter, between the module 3 and 4.
The input for the antenna is connected to a first band-pass filter 900Mhz, and is then reported on the roof in the plate connectors.

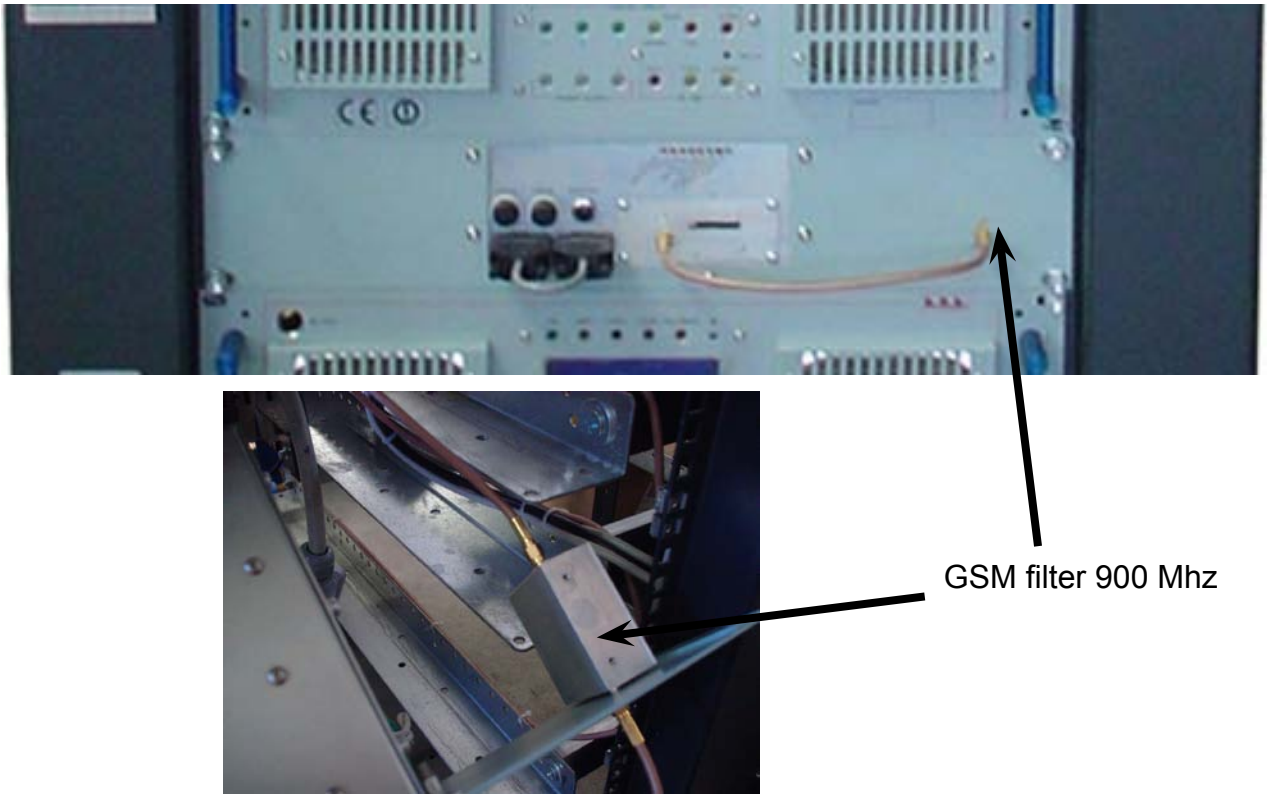

The bottom part of the telemetry contains the following connectors:

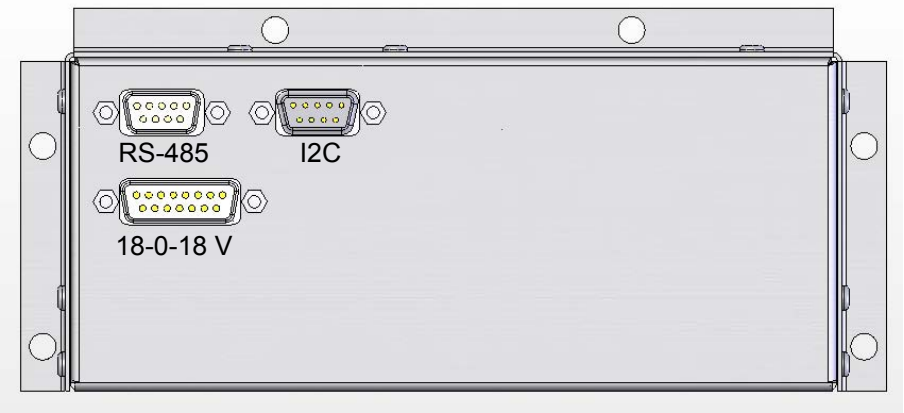

RS-485	DB9 male connector for connecting the RS-485 bus from the CCU
I2C	DB9 male connector for connecting the I2C bus from the CCU
18-0-18 V	DB15 male to connect power from the CCU

The top of the telemetry contains the following connectors:

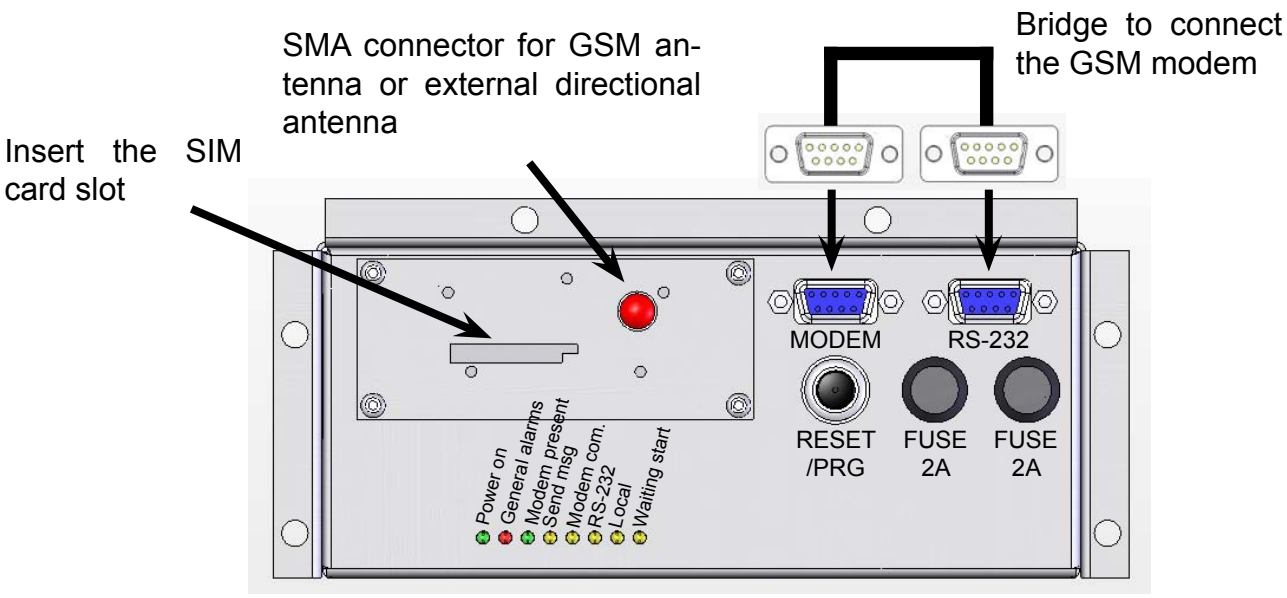

Modem	DB 9 female connector connected to the modem internal GSM
RS-232	DB 9 female connector to connect the GSM modem, with telemetry, or to connect with the PC via RS-232 to the transmitter
Reset/prg	Button to reset the telemetry or programming
Fuse 2A	Fuse protection
Fuse 2A	Fuse protection
Power on	The LED on indicates that the telemetry is powered
General alarms	The LED on indicates that the memory of the telemetry alarms are present
Modem present	The LED on indicates that the GSM modem is present and correctly detected by the telemetry
Send sms	The LED on indicates that the GSM modem is sending SMS messages
Modem com.	The LED on indicates that the modem is connected
RS-232	The LED blinks when you connect your PC to the RS-232 telemetry to communicate with the transmitter using the “Telecon 32bit”
Local	The LED on indicates that the transmitter is in LOCAL (via the selector switch on the CCU) and telemetry will not send alert messages or you can remotely connect to the transmitter
Waiting start	The LED blinks for about 45 on first boot. During this period, the telemetry, it analyzes the whole machine to check status and does not send alerts

Note: you need to enter the bridge supplied with the telemetry between the connector MODEM and RS-232 to connect the GSM modem, otherwise will not work

Nota: Please note that to fully deploy the features of this telemetry system, the you will need to sign a contract with a GSM service provider including DATA COMMUNICATIONS.

The use of the telemetry system requires the correct setting of the addresse in the connected pieces of equipment, since they communicate on a shared bus.
Set the Uart address of exciter 1 to “1”, exciter 2 to “2”.
To make this adjustment, from the main menu of the exciter place the cursor light on the “Admin” and click on it.

Scroll down the menu next to the item “GenSt”, click on it and select “Uart Adr.” and set it to 1 on the first exciter (the lower) and 2 on the second (if present).

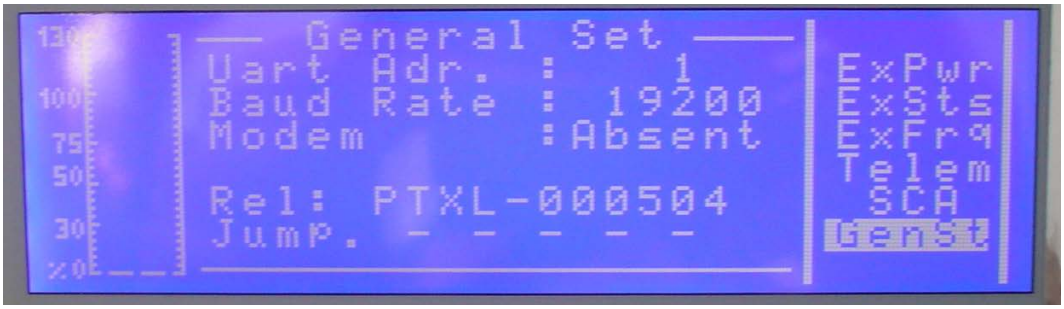

We must now set the address on the CCU, which must be absolutely 3 (this address is already set to factory).
From the main menu (the one that shows the direct and reflected power), press the ESC key and then OK and move the cursor bright, on the “Settings” menu and press OK. Select the line “Talk Address” and press OK, with the UP ‘and DOWN keys’ set the parameter 3.

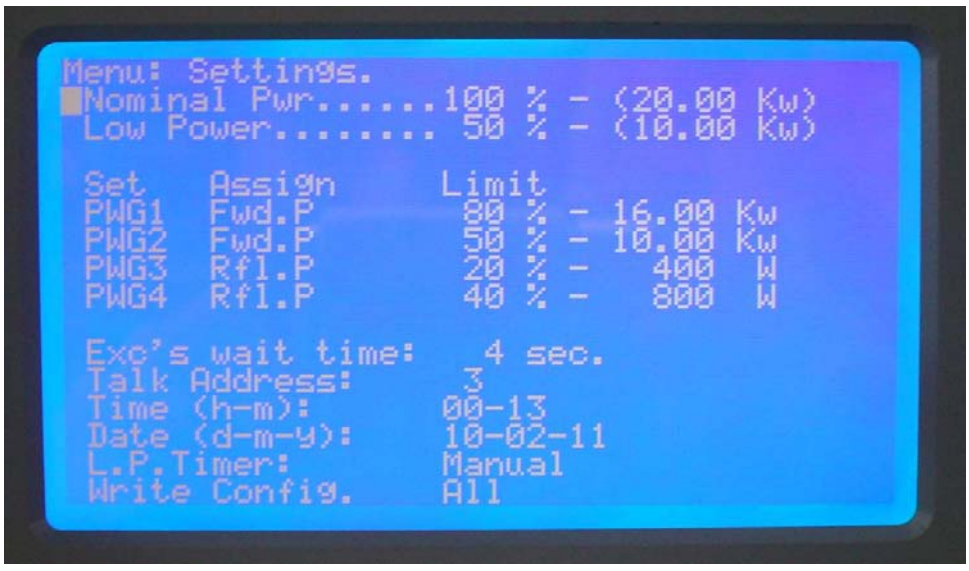

10.16.1 Installing and configuring the PC software

You will need:

• A PC running on Windows 98 or newer (the software has been tested with 98, NT, 2000 and XP)

• The “Telecon 32bit” CD ROM, provided with the machine

• DB9 pin-to-pin cable long enough to link the PC to the TLC5KPS

Insert the CDROM in the PC, browse and executethe program setup_telecon.exe.

Follow the instructions on screen to install the software on your PC.

Then run the program Station_upgrade.exe, which will update the list of stations.

Follow the instructions on screen to install the update.

Please note that if you already have an installed version of the Telecon32bit software, the new software will just upgrade it and will not affect you installed station database.

WARNING: The transmitter must be in REMOTE otherwise there can’t be connected to the telemetry.

Launch the Telecon program: Start -> Programs -> Telecon 32bit

You will be presented with the database selection screen.

On the Database combobox (the top line), selet the PLUGIN_AMP.MDB database.

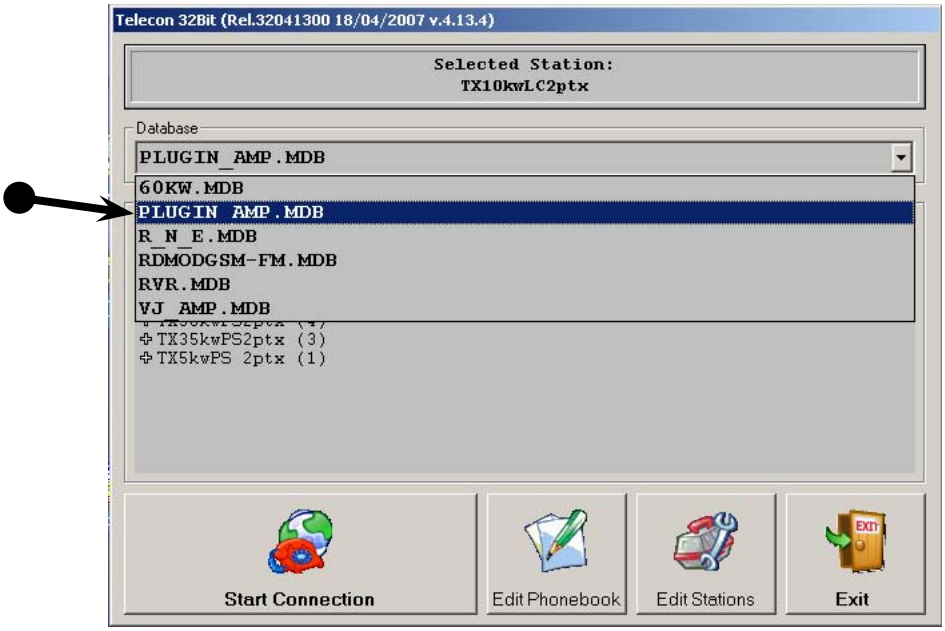

Then select the station TX20KwLC2ptx station and click on “Edit Phonebook”.

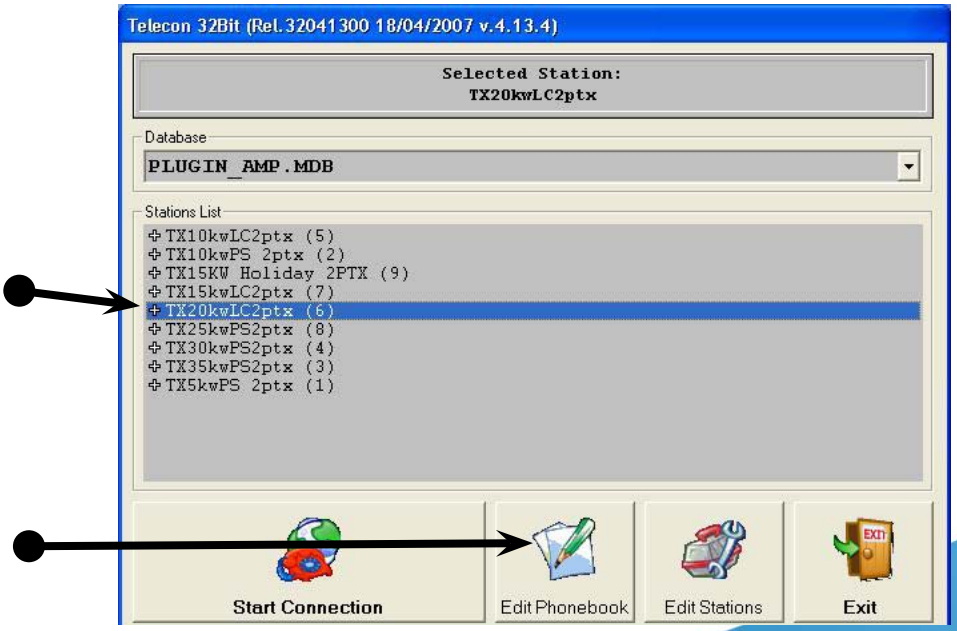

This will open the following screen

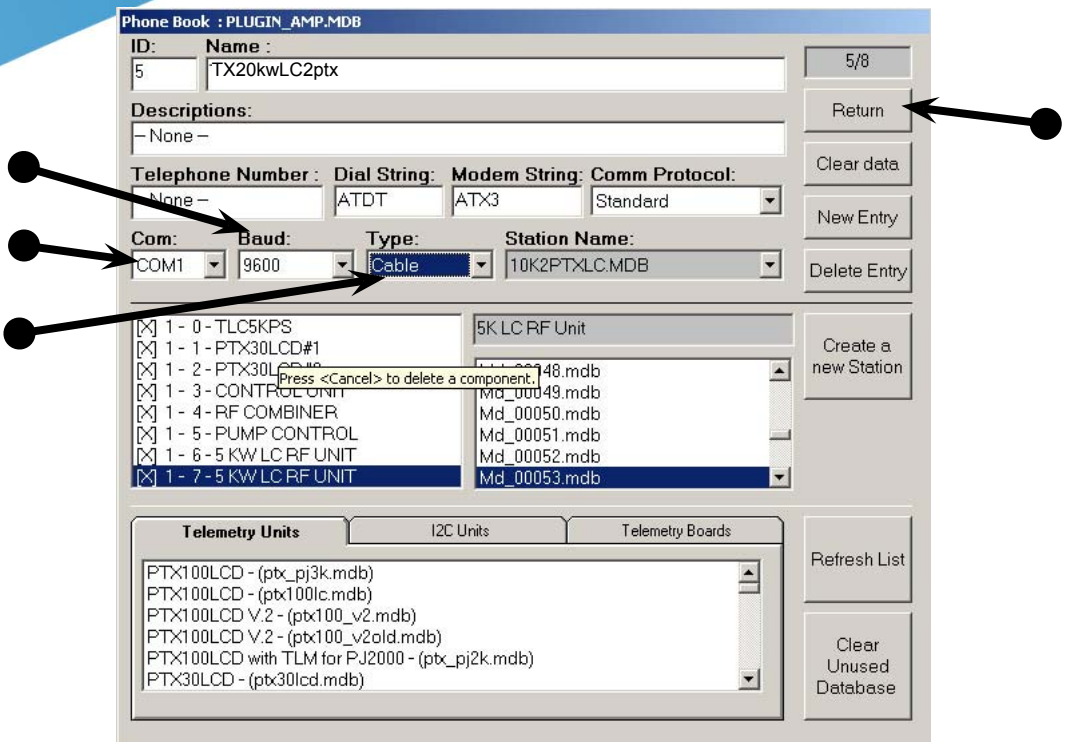

The first time will need access to the telemetry via the DB9 cable, so you can set the details of the station and telephone numbers to which messages will be sent.
Plug the cable into a PC serial port (for those who no longer have the serial port you can use a USB - RS-232 converter, not supplied), and the other end is connected to the RS232 port of the telemetry (if it has already been added to the bridge between the modem and RS-232 remove)
Set the following parameters:
Com: select the serial port in use on the PC (COM1,COM2,ecc...)
Baud: is the speed of the serial port, should always be 9600 otherwise it will you communicate
Type: is the type of connection between PC and telemetry, in this case, select “Cable”
Press the button “Return” at the top right and return to the main screen.

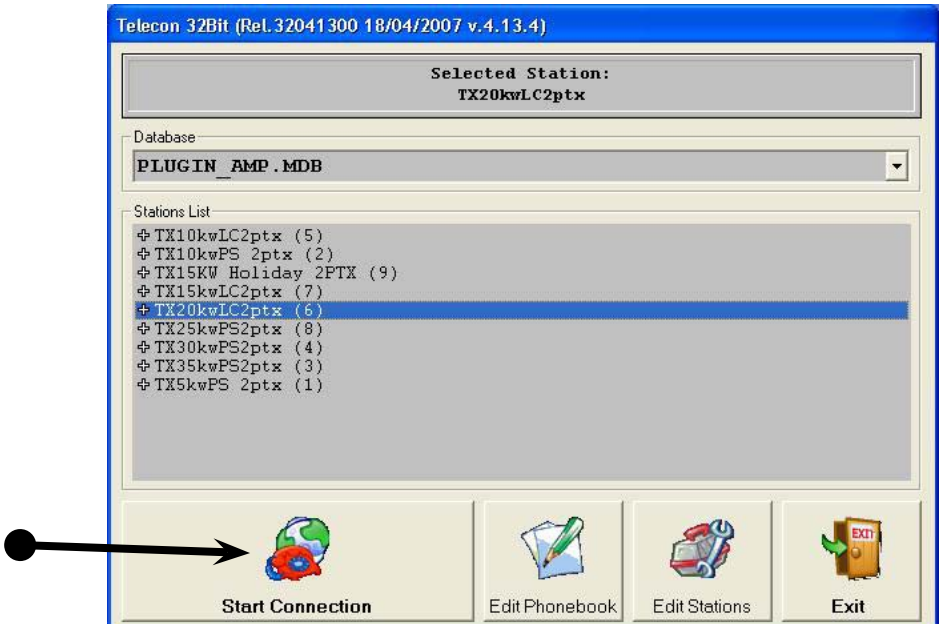

Press the “Start Connection” and at this point will be the link.
This will display the following screen.

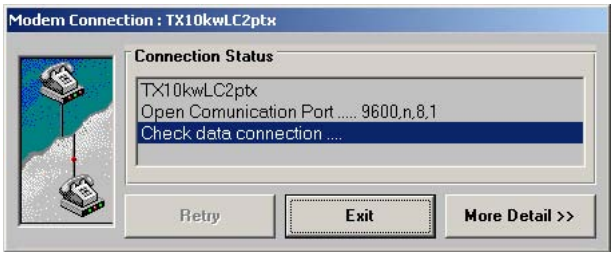

If everything is done correctly it will open the following screen.

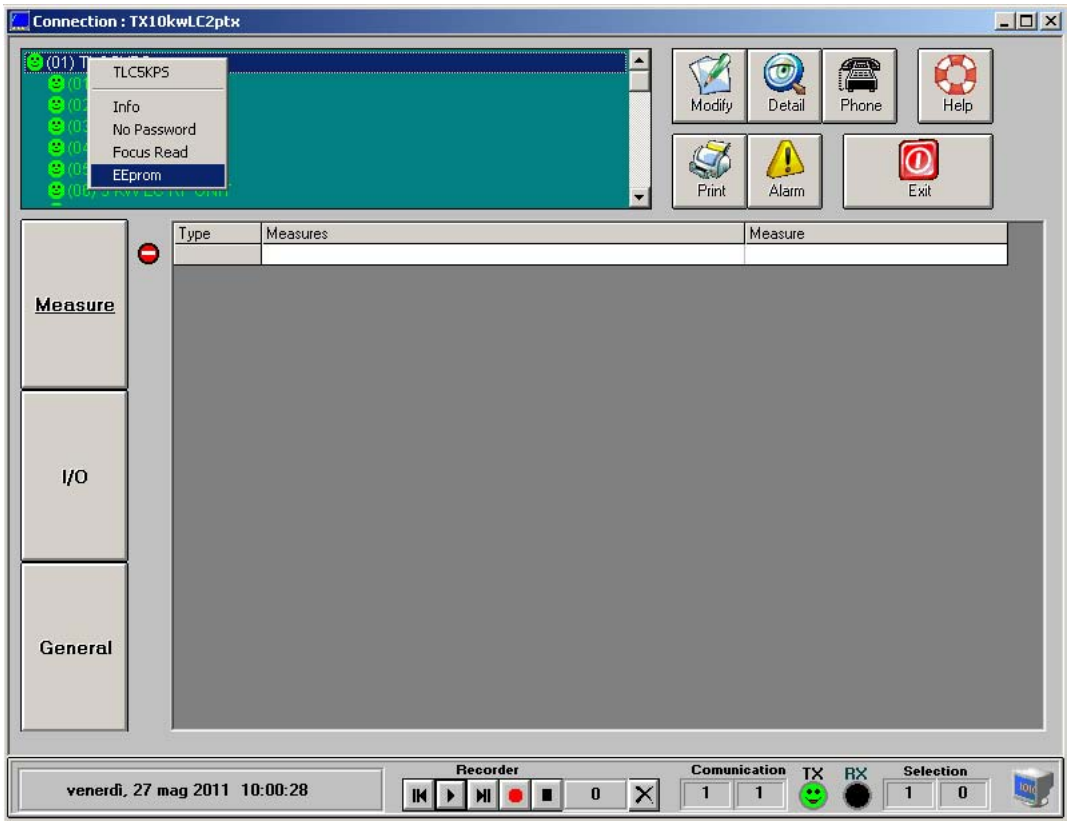

Click 2 times on the top item on the left “(01) TLC5KPS” (in this box are listed all the devices connected to the machine via I2C BUS, in this case we are querying the telemetry) with the left mouse button, opens a drop down menu and click the last entry “EEprom”.
A screen will open, click on button “Read EEPROM” and the question “Are you sure?” press OK.

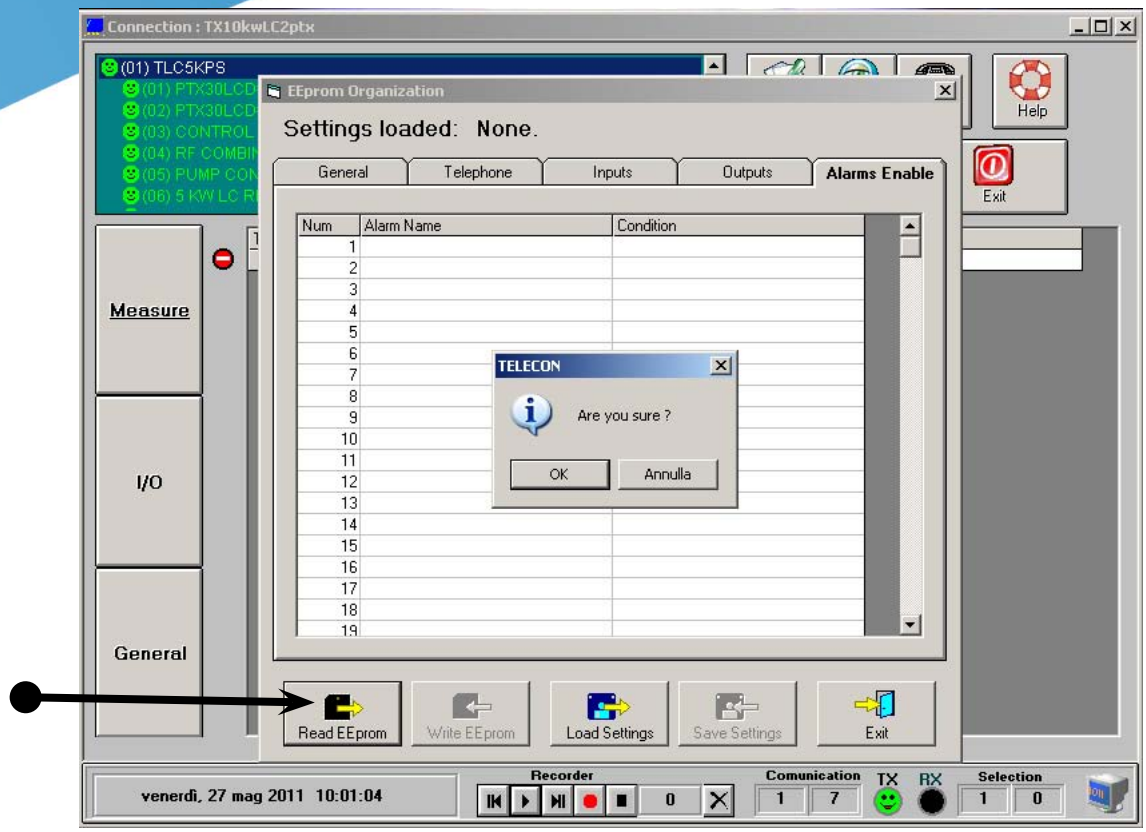

Begin reading the data in the EEPROM. The blue squares at the bottom, showing what progress has been reached, the reading of the EEPROM.

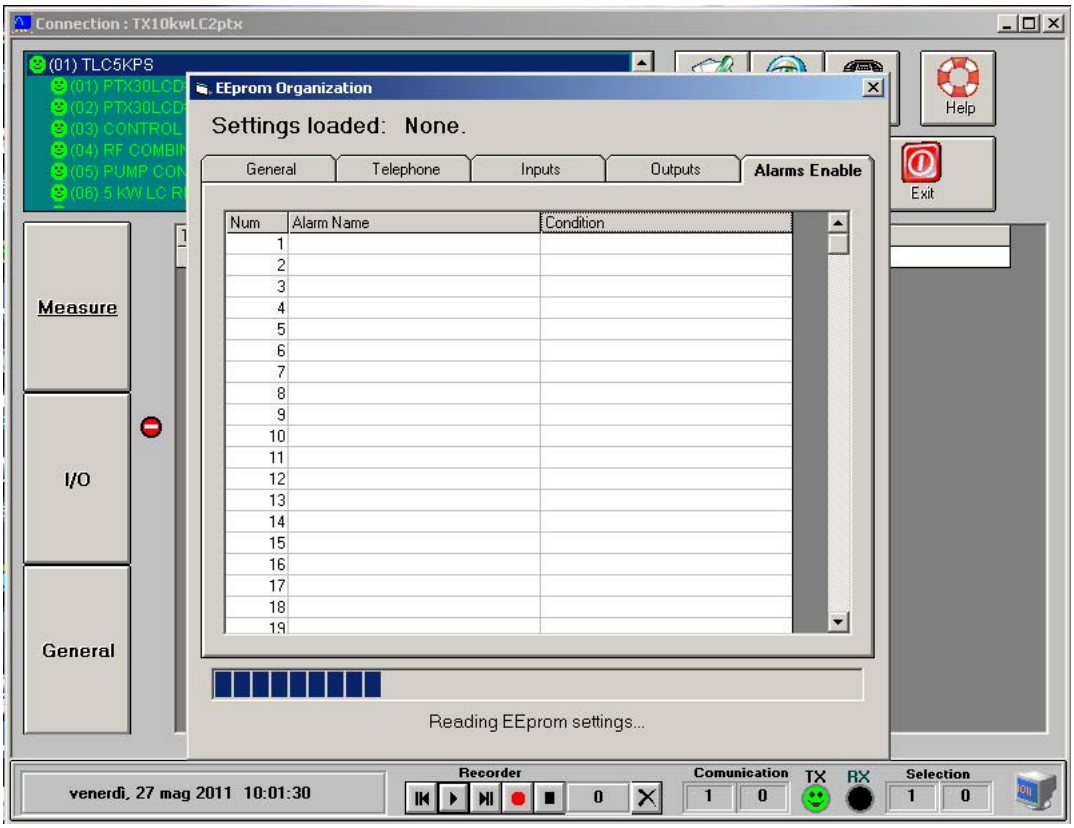

When the blue bar is full, you will see the following screen.

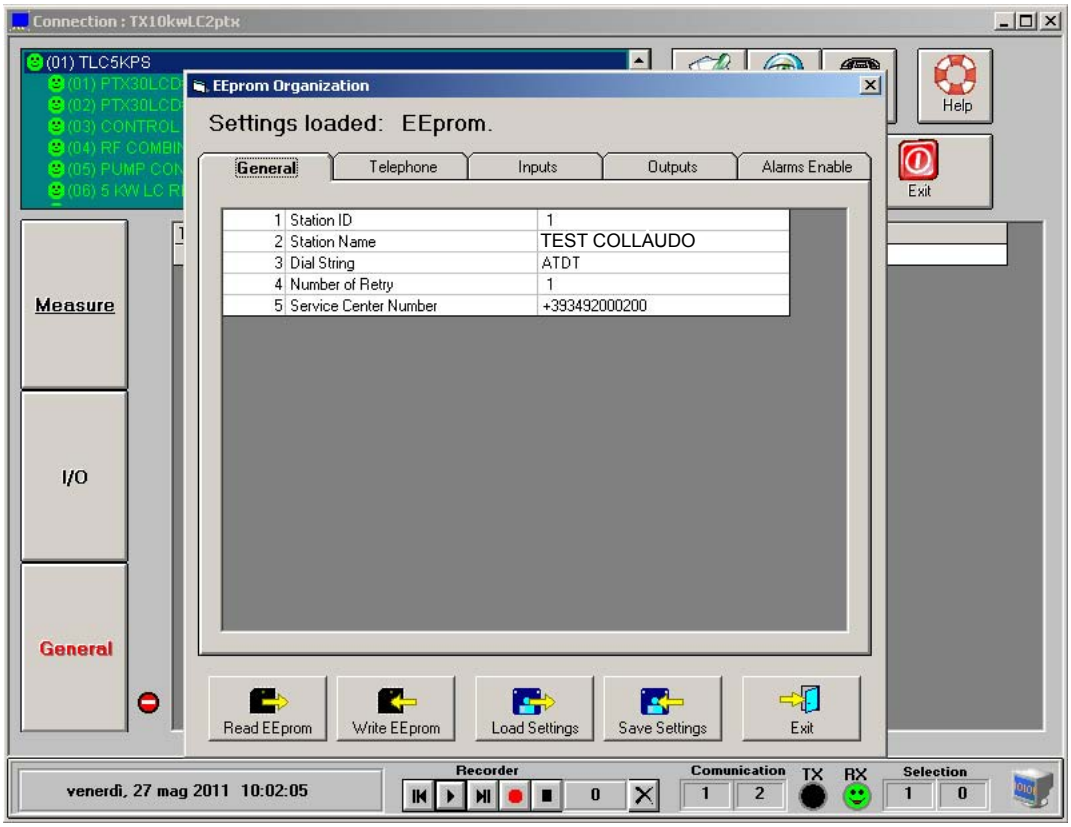

The screen that opens shows the inside pages of different settings, but those that we have to compile us, are the first two, “General” and “Telephone”.

GENERAL

Station ID	Identification of the address of the transmitter, usually 1
Station Name	Mnemonic name of the station, like place or frequency, this name will be displayed in the SMS message you will arrive
Dial String	Normally ATDT
Number of Retry	Number of messages to send. We suggest to set this value to at least 2, in case of problems with the SMS Service Centre.
Service Center Number	Service center number of your mobile operator **Note: before the number, there must always be the international prefix of the state where you are eg. +39 For Italy**

Clicking on the various fields you can change their values.

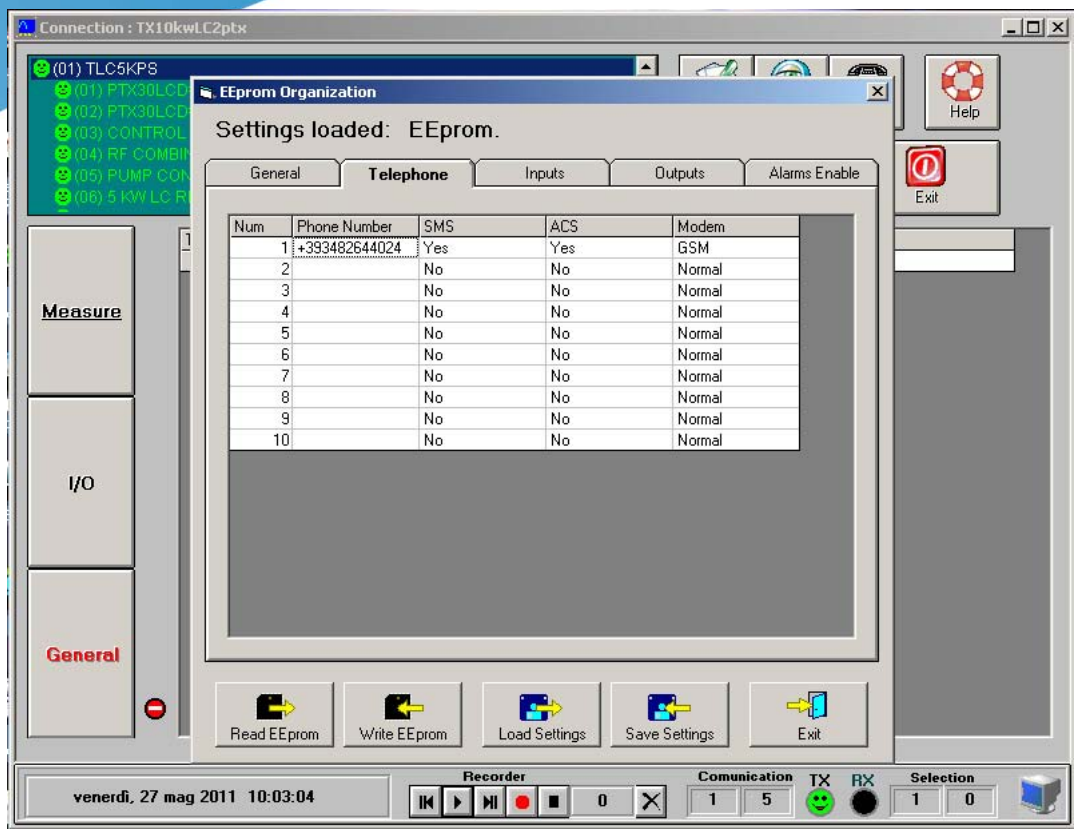

TELEPHONE

1.....10	Memory location where you save the phone number
Phone Number	Telephone number to which messages are sent **Note: before the number, there must always be the international prefix of the state where you are eg. +39 For Italy**
SMS	Yes: the SMS message in case of alarm, is sent to the number set No: the SMS message in case of alarm, will not be sent to the number set
ACS	Yes: the number set, can be sent to telemetry, via SMS requests for information or modify parameters No: the number set, can not send telemetry, via SMS requests for information or modify parameters
Modem	Select the type of modem used, in this case GSM

Clicking on the various fields you can change their values.
The possible combinations of parameters SMS and ACS are:

SMS	ACS	
Yes	Yes	OK
Yes	No	OK
No	Yes	Condition not possible
No	No	OK, but the number set will be ignored

Once completed these settings, click on “Write EEPROM” to write in the memory, when asked answer OK

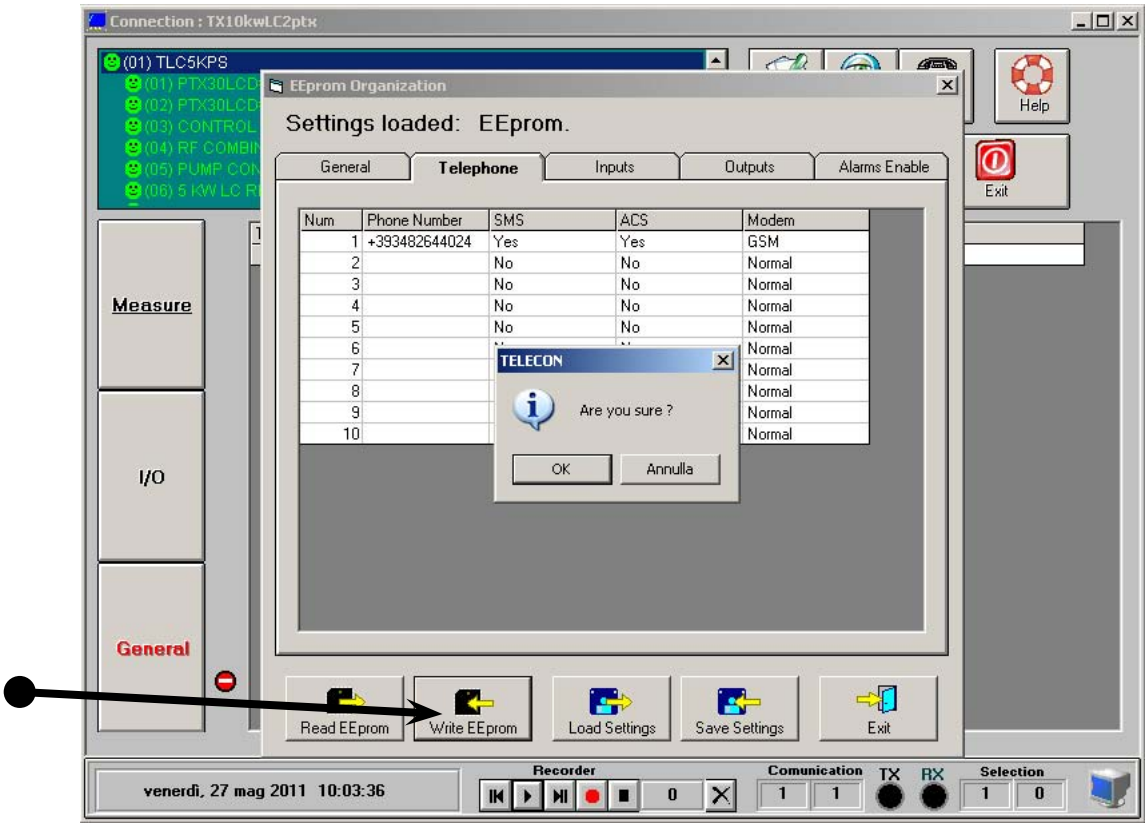

Start writing data into the EEPROM. The blue squares at the bottom, showing what progress has been reached, the writing of the EEPROM.

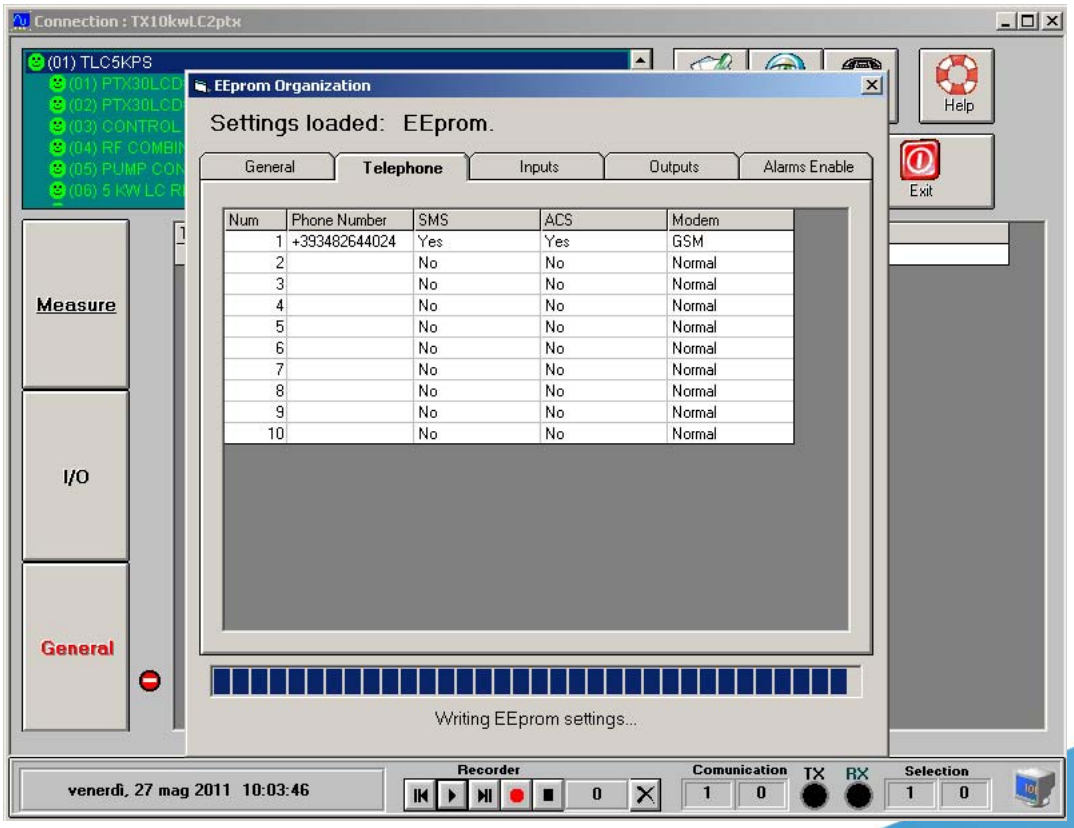

Once you have finished writing, press the button “Exit” to return to the main screen as well.

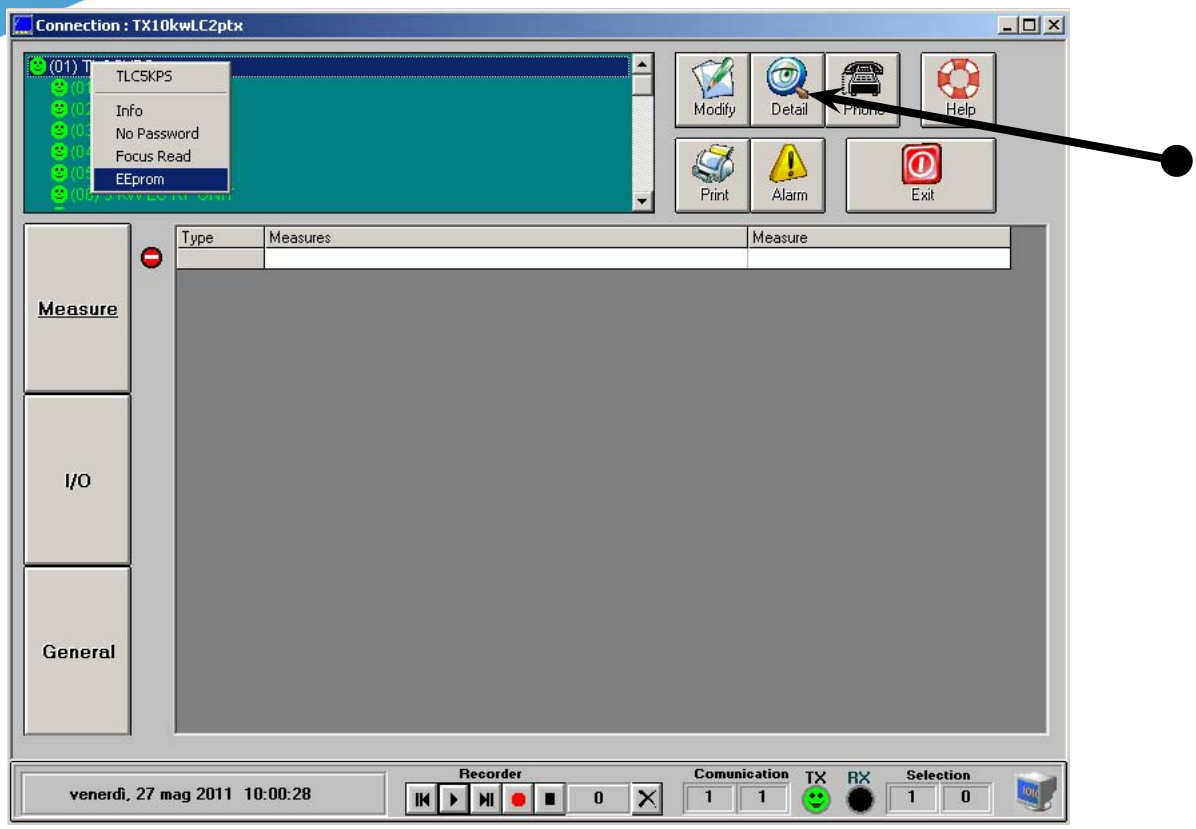

Now press “Details” in the upper right and will open the following screen.

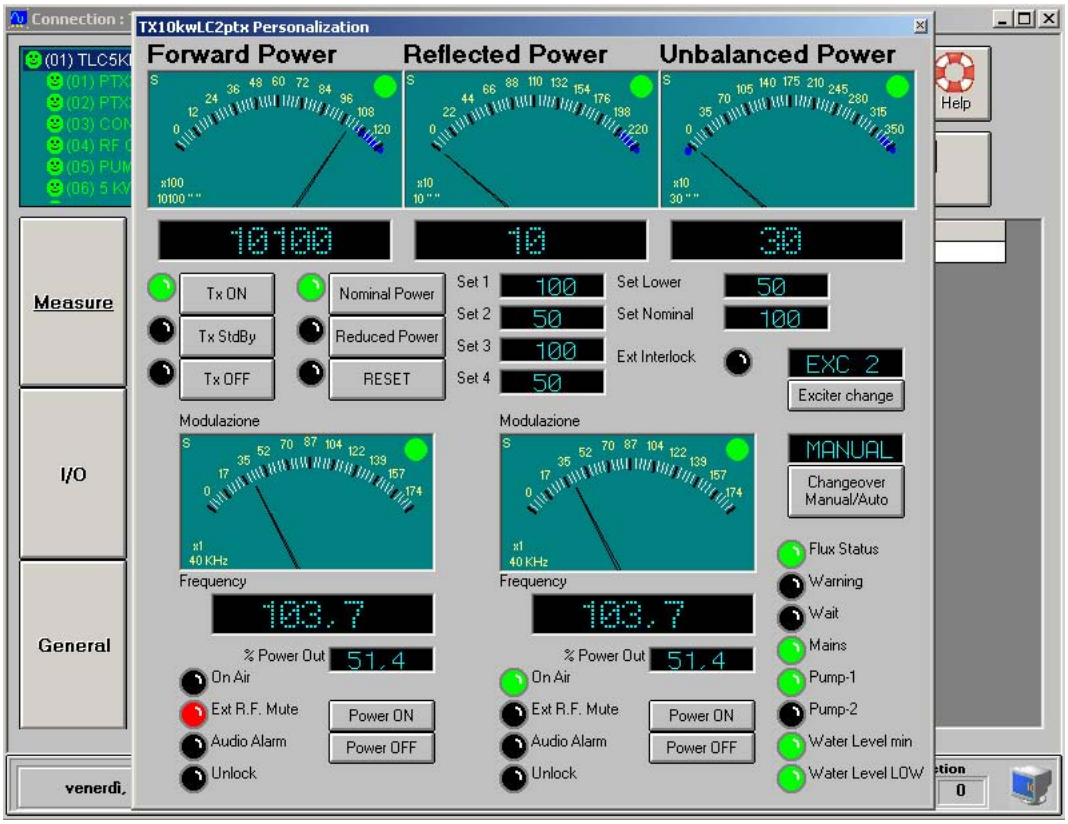

Through this screen and possible see all the parameters of trsmettitore as if you were in front of the machine: forward power, reflected, unbalanced, frequency, see the status of the LEDs, you can turn it off, turn it on, reset alarms and exchange the exciters.
To exit this screen press the X in the upper right.

Back to the main screen, select the entries in the top left, you can view the parameters of the devices inserted in the machine: eccitatore 1 e 2, control unit, RF combiner, pump control, RF unit 5KW.
On the left side there are 3 buttons: Measure, I / O and General. Each displays different information (not always all 3 are available for all devices).
""Measure" contains all the measures questioned apparatus (eg, measurements of currents, voltages, temperatures, etc. ...).
"I / O" indicates the status of its internal relay system questioned.
"General" contains general information about interrogated apparatus (frequency, forward and reflected power and so on ...).
In the "Measure" and "General", by moving the mouse cursor over the various lines of information, appears Simble prohibition red, this indicates that you can not change that value. The only screen where you can change the values, is that "I / O," in which, positioned over several lines, a blue arrow appears, this indicates that you can change that value. Is possible, always on the "Measure" and "General", which appears a yellow exclamation mark, this indicates that the relevant measure is outside the range of accepted values.
Example: tab "Measure" PTX

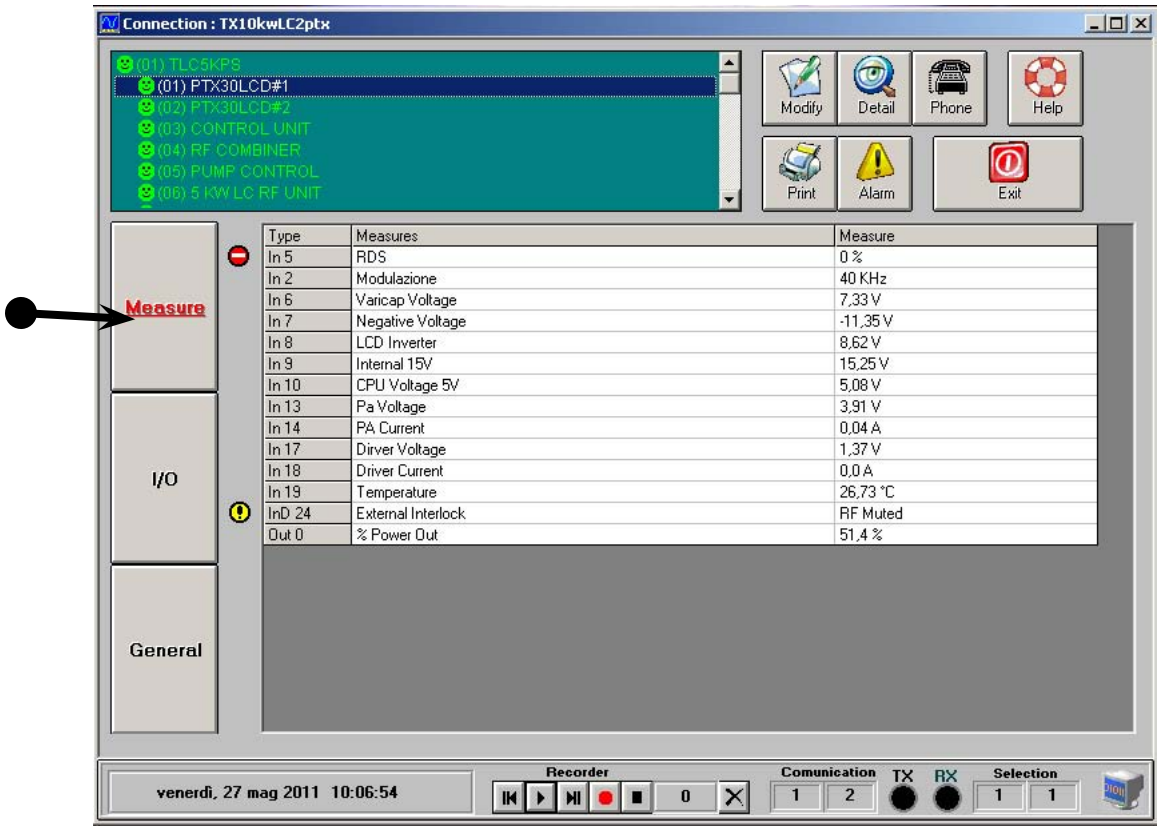

Example: tab “I/O” PTX

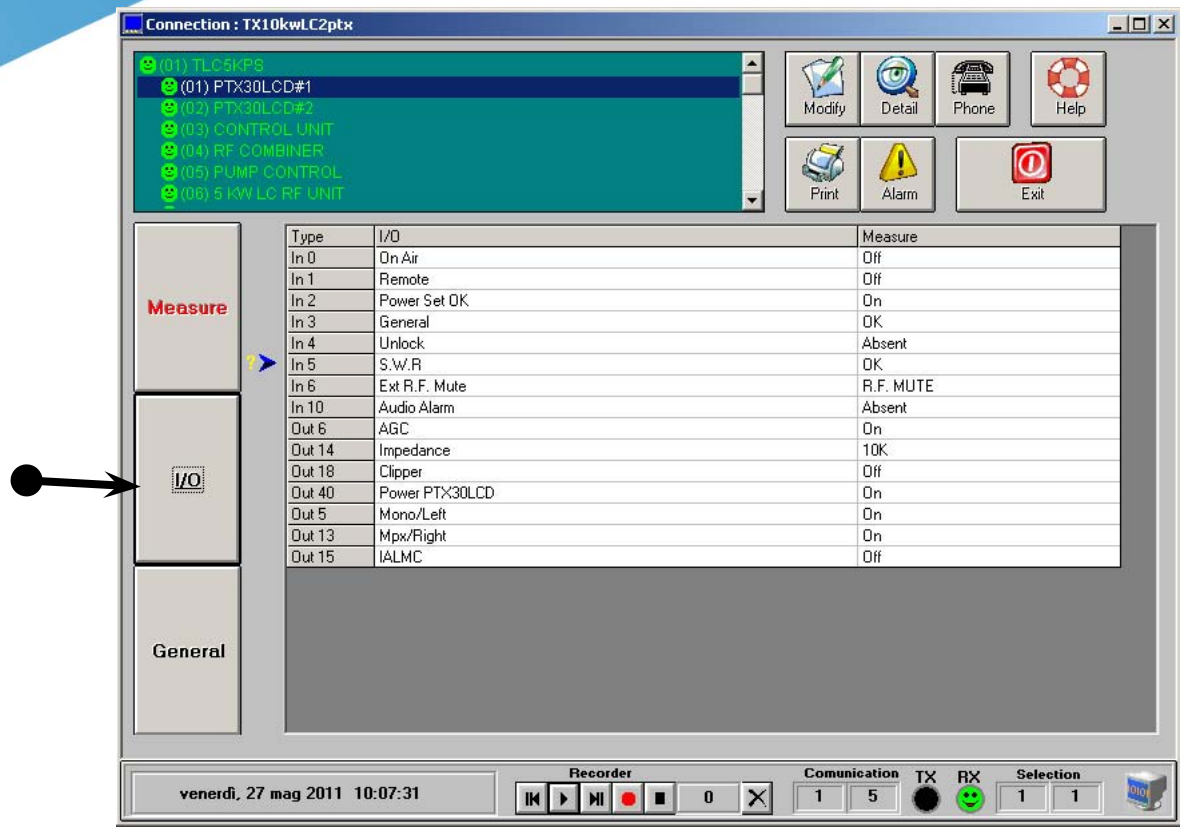

Example: tab “General” PTX

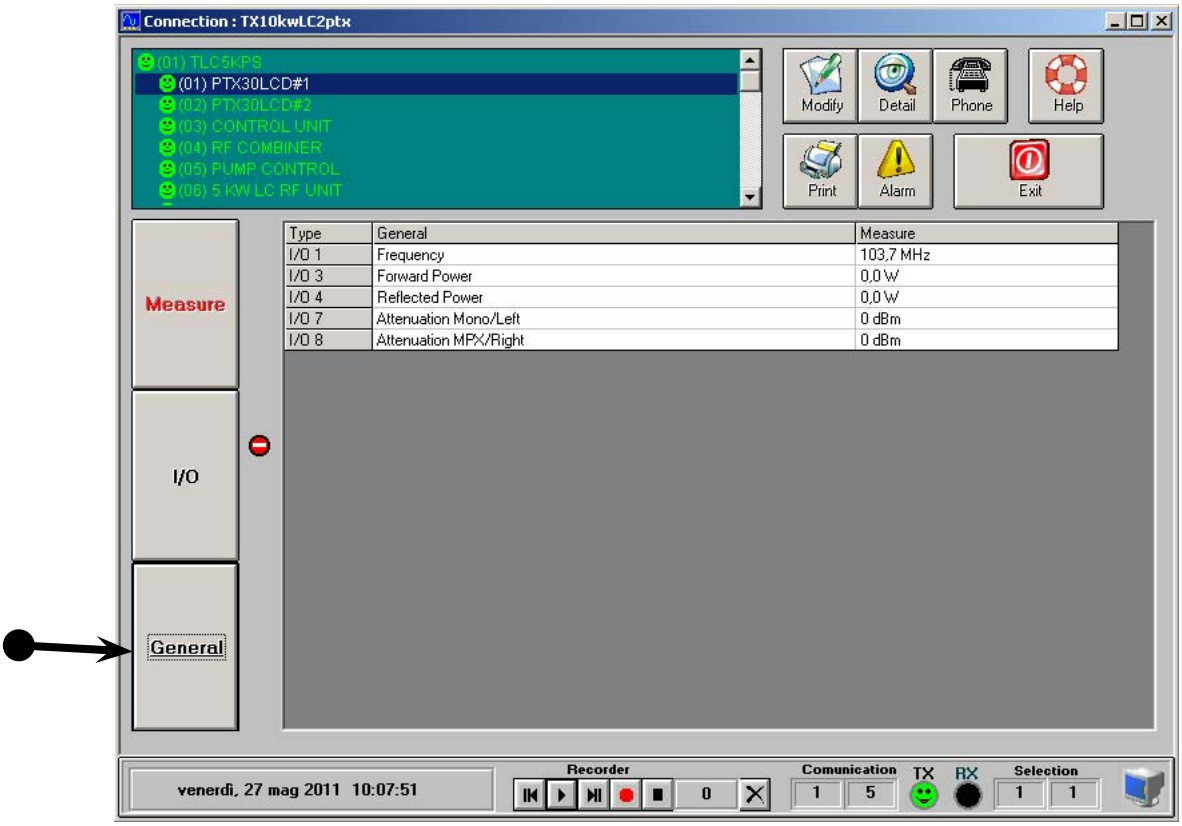

Clicking on the date on the bottom left is possible, write in the telemetry time and date (the sameset on computer), so that if there are alarms can be known with precision time and date on which the event occurred.
Once you click on the confirmation date is asked to do this, answer “Yes”.

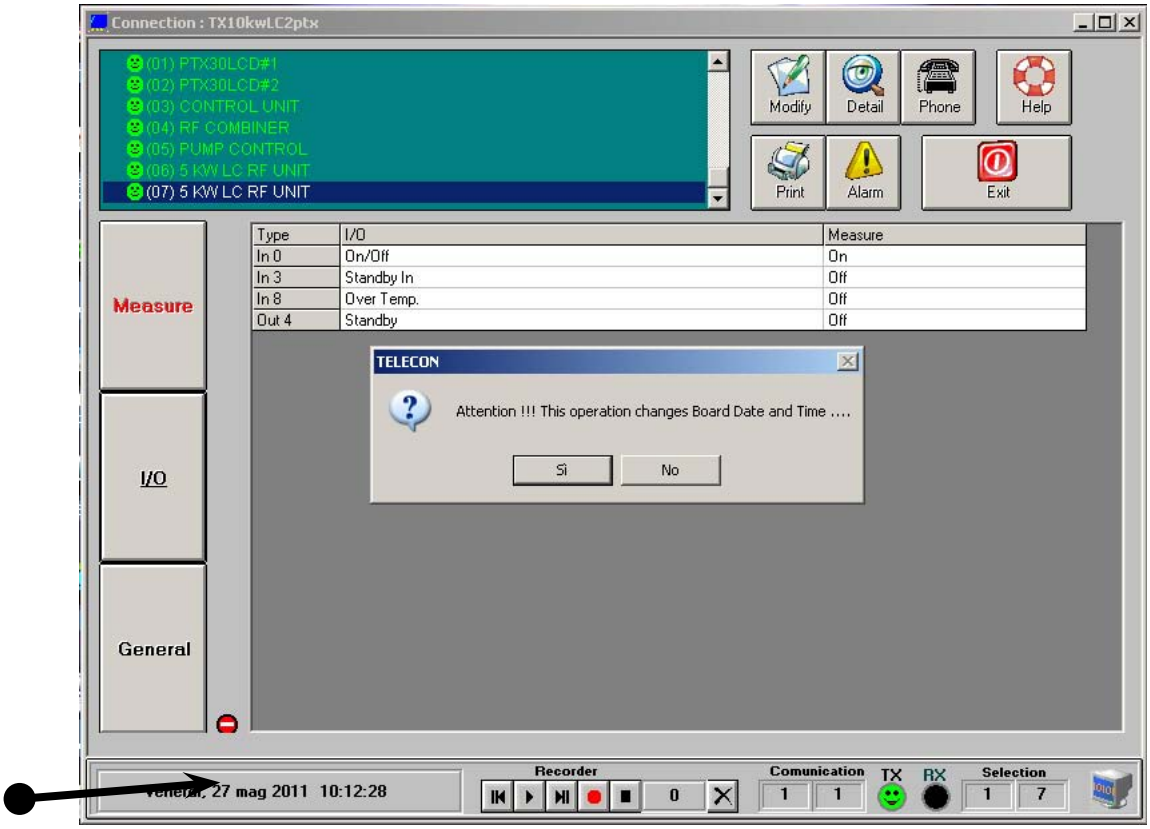

Also from the main screen, clicking on the “Alarms”, a screen opens where you can view the alarms (to display the list, click on the “+” next to TLC5KPS)

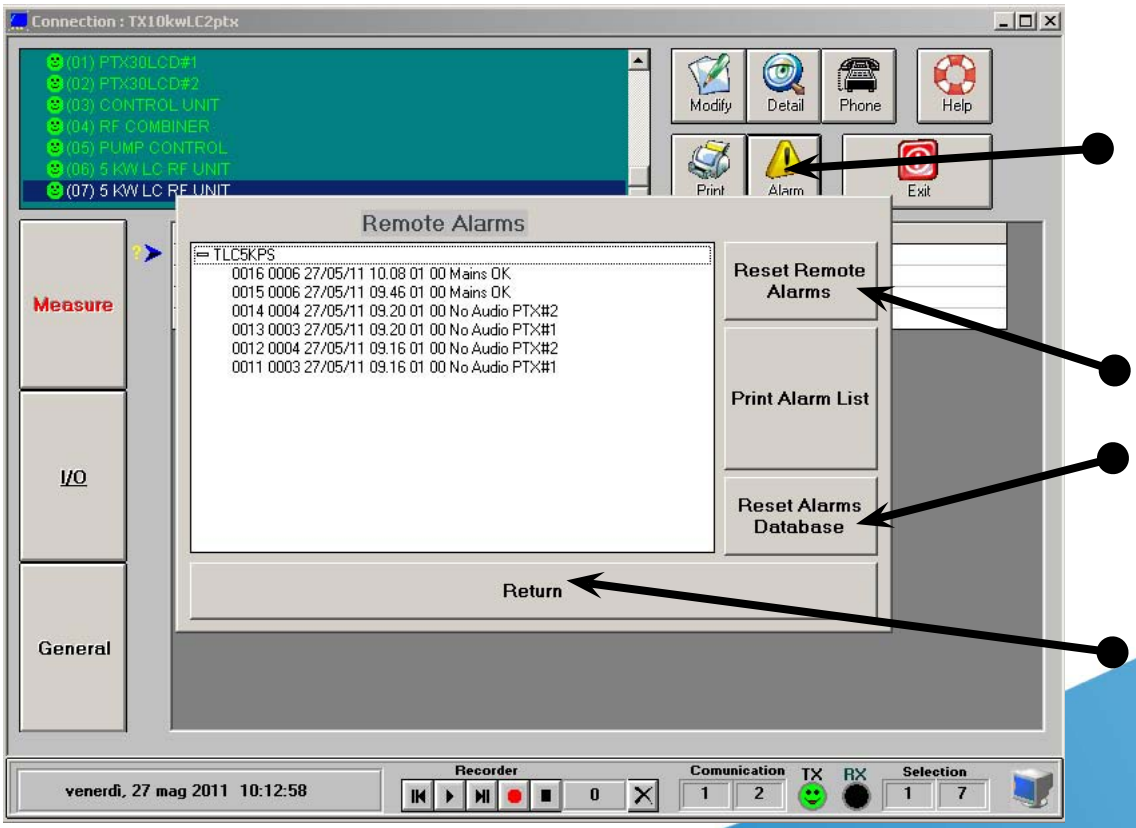

From this screen you can also reset the alarms.
Clicking on the “Remote Reset Alarms” resets the alarms stored in the telemetry.
You will be asked the following question, answer “Yes”.

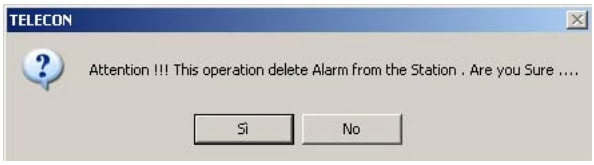

Clicking on the “Reset Alarms Database” deletes the alarm list on this screen the program.
You will be asked the following question, answer “Yes”.

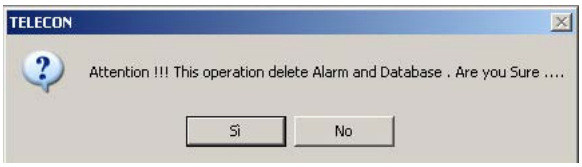

Click on the “Return” at the bottom to return to the main screen.
Press the “Exit” to return to the selection of the type of transmitter.

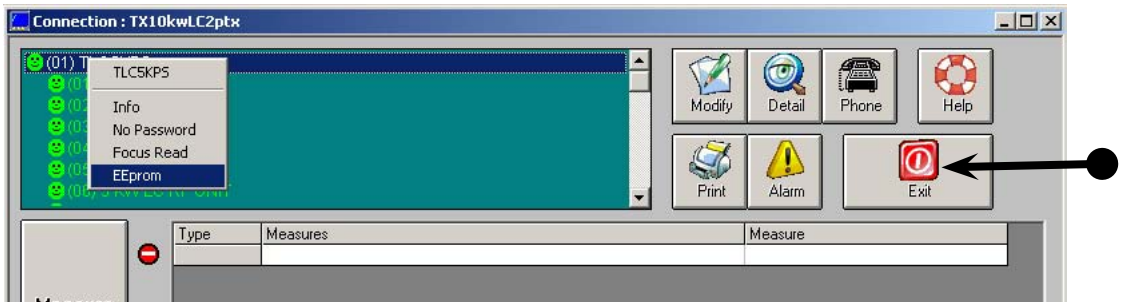

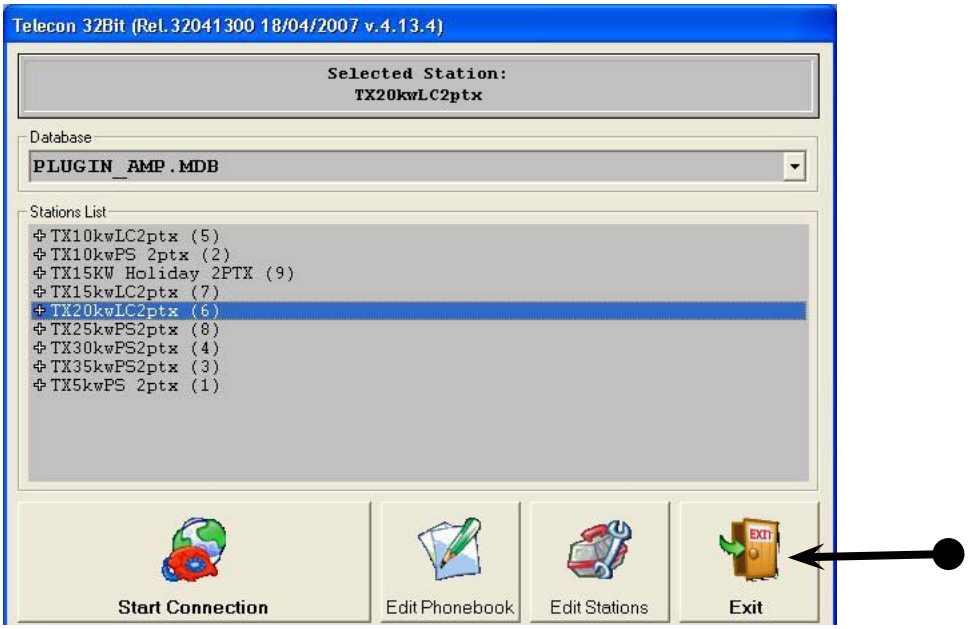

Then disconnect the RS-232 cable by the telemetry, and reconnect the bridge MODEM - RS-232. Now you can connect remotely to the transmitter, using a GSM modem connected to your PC, or via phone to verify that everything works correctly.
Press the “Exit” to exit permanently from the program.
Leave the transmitter in “REMOTE” if you do get warning messages or be able to connect remotely via PC or mobile phone

Checked in the “Modem” menu of the CCU, if where they have been properly stored the data entered (see chap. 5.1.13)

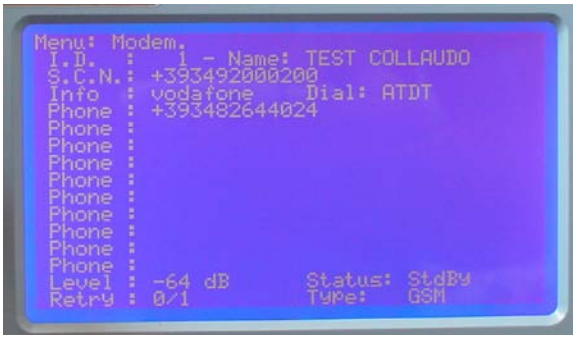

10.16.2 Dial-up via PC

WARNING: The transmitter must be in REMOTE otherwise there can be connected to the telemetry.

Launch the Telecon program: Start -> Programs -> Telecon 32bit

You will be presented with the database selection screen.

On the Database combobox (the top line), selet the PLUGIN_AMP.MDB database.

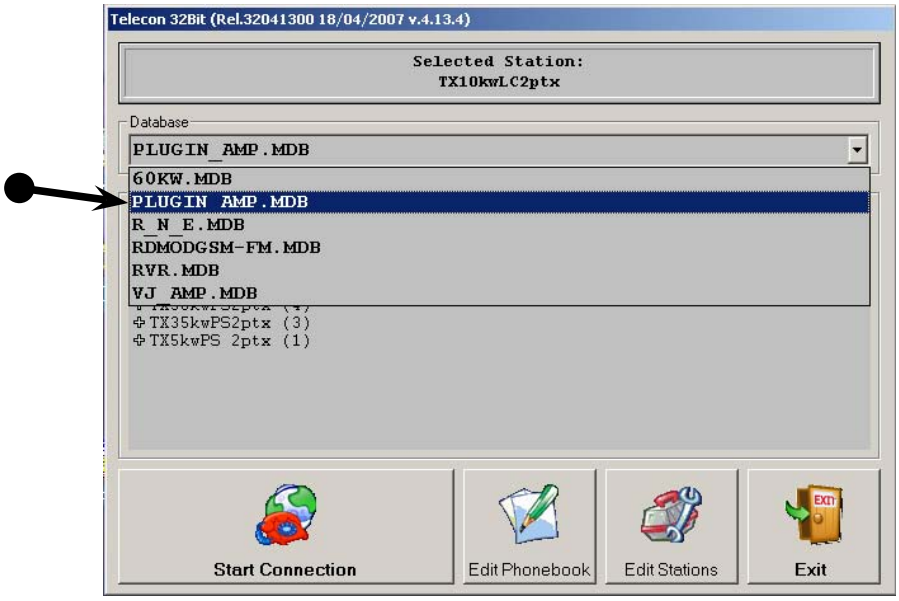

Then select the station TX20KwLC2ptx station and click on “Edit Phonebook”.

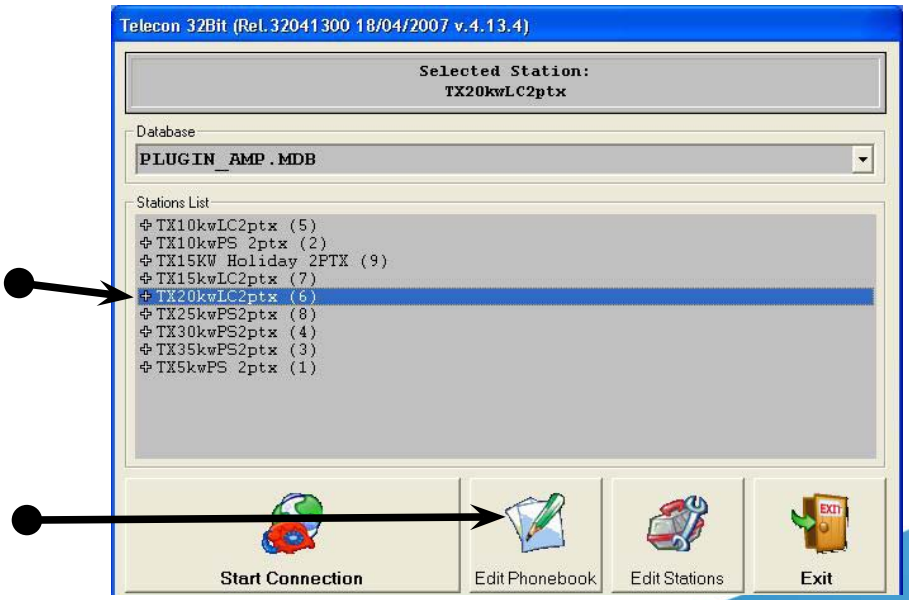

This will open the following screen

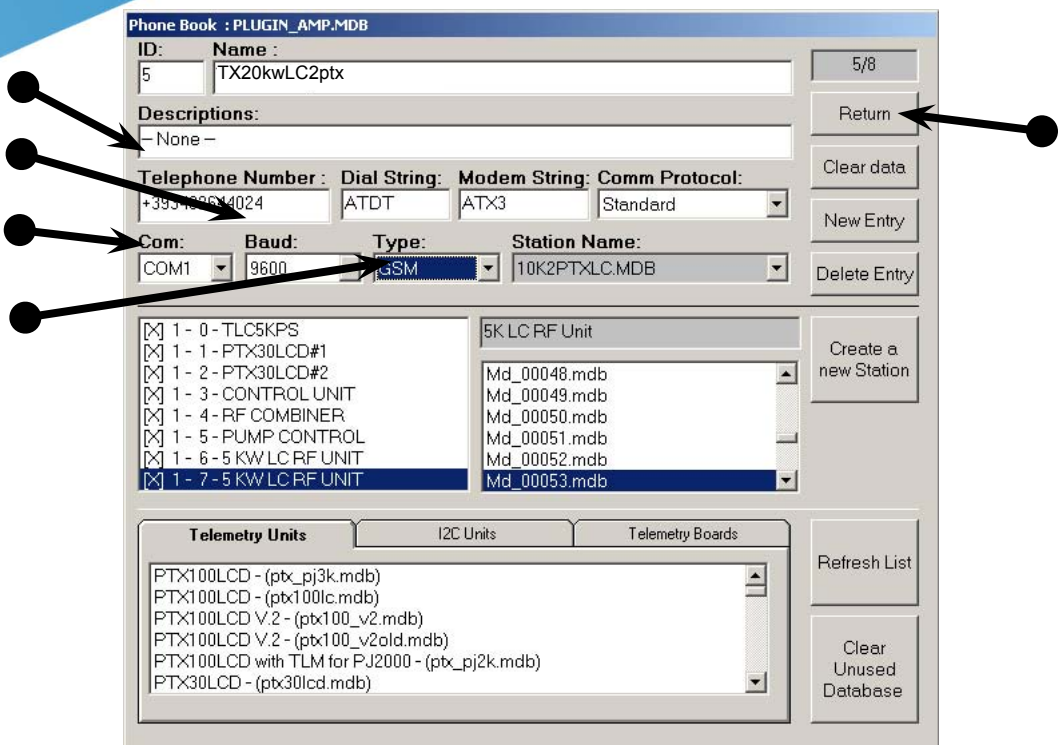

Connect the GSM modem to a PC serial port (for those who no longer have the serial port you can use a USB converter - RS-232, not supplied).
Set the following parameters:
Telephone Number: set the phone number of the SIM present in the GSM telemetry, of transmitter, we want to control **(Note: there is always the number in front of the international prefix of the state where you are eg. +39 for Italy).**
Com: select the serial port in use on the PC (COM1,COM2,ecc...)
Baud: is the speed of the serial port, should always be 9600 otherwise it will you communicate
Type: is the type of connection between PC and telemetry, in this case, select “GSM”
Press the button “Return” at the top right and return to the main screen.

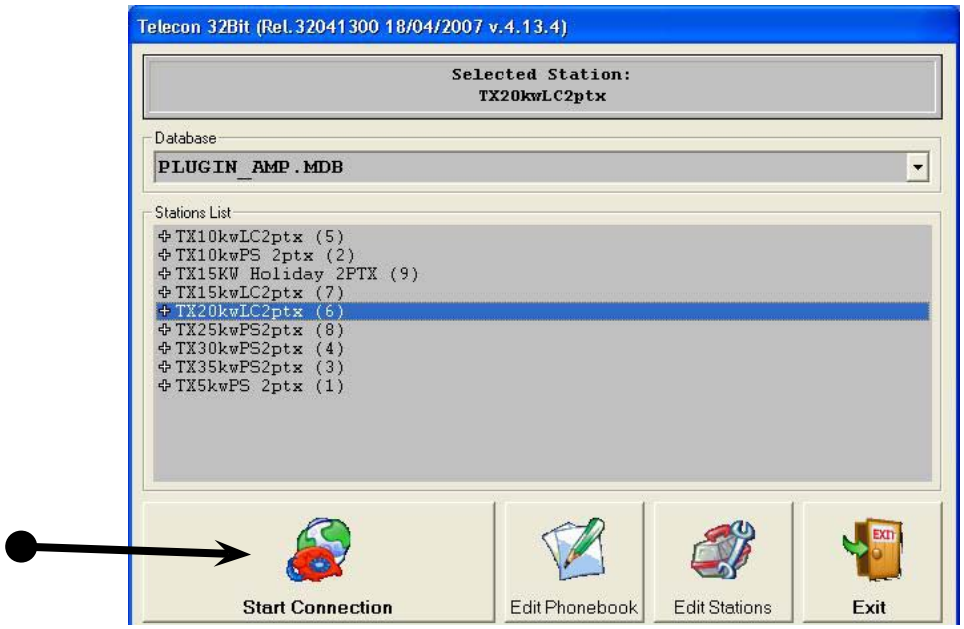

Press the “Start Connection” and at this point will be the link.
Now follow the steps previously listed.

10.16.3 Dial-up via mobile

The commands that can be sent to the transmitter using SMS messages are as follows:

Command	Reply	Description
INFO	Station: “station name”- ID: “ID number”- FWD: “value”- RFL: “value” UNBAL: “value” TX On (or TX Off or TX StdBy)- Low Power / *Nom Power* Audio Present / Audio Absent Alarm Present / Alarm Absent	Information about the transmitter’s status
TXON	Station: “station name”- ID: “ID number”- TX is On -	Switching on the transmitters
TXOFF	Station: “station name”- ID: “ID number”- TX is Off -	Switching off the transmitters
LOWPWR	Station: “station name”- ID: “ID number”- LowPwr OK-	Low power setting
NOMPWR	Station: “station name”- ID: “ID number”- NomPwr OK-	Nominal power setting
ALARM	Station: “station name”- ID: “ID number”- Alarm: “List of the alarms in memory”-	List of the alarms in memory
RESET	Station: “station name”- ID: “ID number”- ALARM RESET OK-	Resetting the alarms in memory

Every time you send a command must always return back a reply message, to confirm that the command was received and executed.
The reply message may arrive within a maximum time of 5 min. After this time the command is void.
These commands can be sent only if the telephone number used is in memory of the telemetry and the parameter “ACS” is set to “Yes”.
WARNING: The transmitter must be in REMOTE otherwise not receive any command.

10.16.4 Alarms

These are the alarms that the transmitter can send:

1	Foward Power	The power has dropped below the value set in PWG2 (menu settings of the CCU)
2	Reflected Power	The power has risen above the value set in PWG4 (menu settings of the CCU)
3	Unbalanced Power	The power on the dummy load has excee-ded the 3500 W
4	No Audio PTX1	No audio input to PTX1
5	No Audio PTX2	No audio input to PTX2
6	Mains Fault (solo se è presente l' UPS)	Is no longer the power supply, the transmit-ter is turned off, the UPS takes on the logic control, modulators and telemetry
7	Water Level Min	The liquid in the tank has reached the mini-mum level - Refill as soon as possible
8	Water Level Low	The tank is empty, the transmitter is turned off - It 'requires operator intervention
9	Flux	There is no flow of fluid in the circuit, the transmitter is turned off and start the auto-matic exchange pumps - It 'requires opera-tor intervention
10	Mains OK	It is not an alarm, is sent the first time you turned on the telemetry or when the mains voltage returns

10.17 Derating of the system

In case of failure of one or more modules of 5 kW, which implies unbalanced power (available on the second screen menu RF Combiner) over 1500 W on dummy loads 1 and 2 (the two powers must be added) or 2500 W the load Big Load for a time longer than 1 min., it turns on the “derating”, which leads to a lower power output from the transmitter, to a value of about 3600 W.

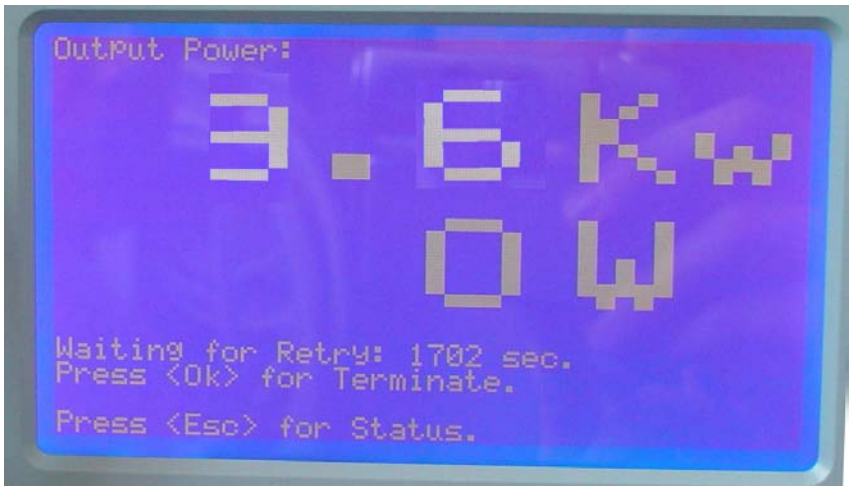

This state persists for 1800 sec. After this time the CCU restores the nominal power. If the unbalanced power, still exceeds 1500W on dummy loads 1 and 2 or 2500 W the load Big Load, the derating procedure is repeated.
If you do not want to wait until the time of the procedure, press “OK”.

11. Installation

11.1 Transmitter connection

First check that the apparatus has not been damaged in transport.
Verify the integrity of the mechanical parts and control that these not been left at the mercy of climatic agents.
Once removed the packaging protections, place it in the position you want it to run.
Fix on the floor with the screws (x4) positioned in the corners at the base of the rack.

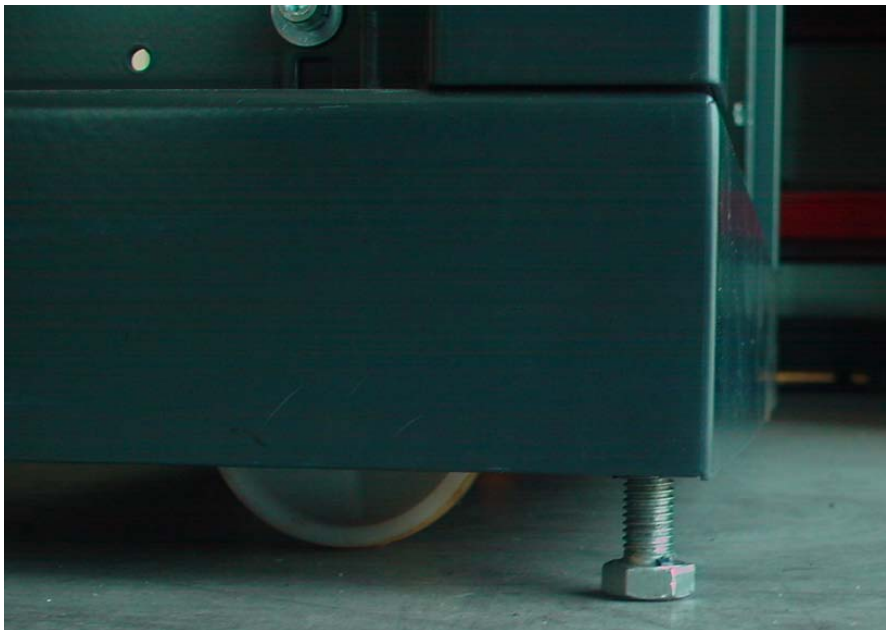

Climb the external cooling unit ensuring the brackets to the wall in a convenient location to connect the hydraulic hoses and electrical connections from the apparatus.
Supplied to the radiator are provided two brackets that can be used for the purpose.

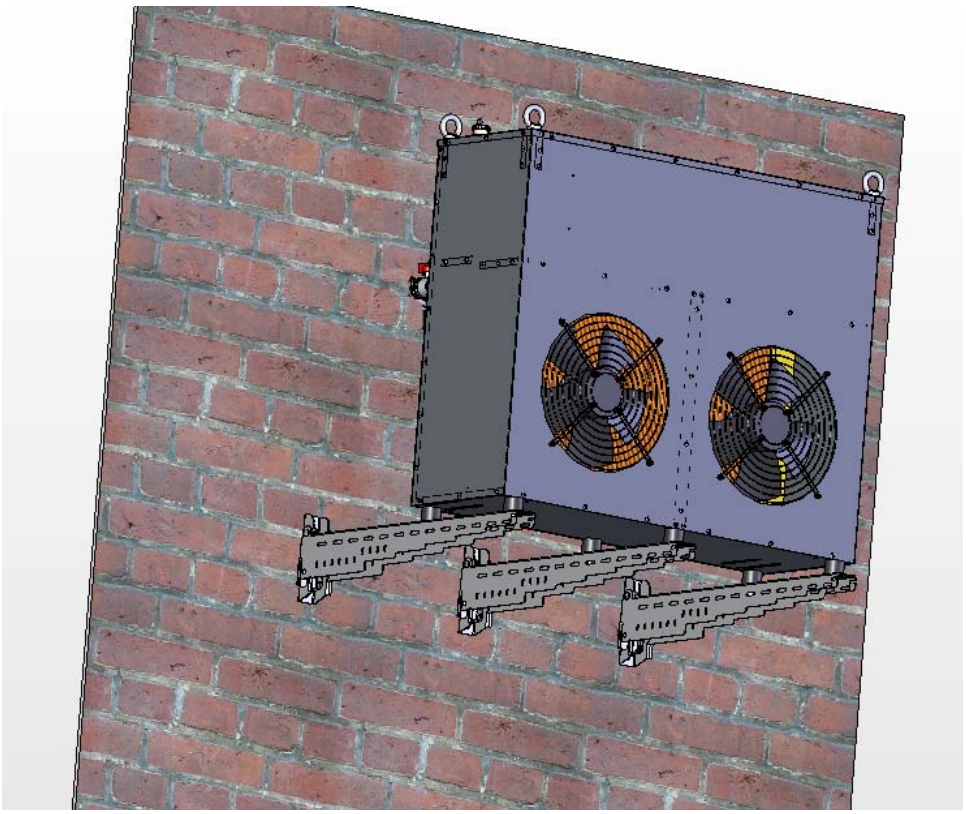

IMPORTANT: when climbed the radiator make sure that the height of the inlet and outlet of the liquid, are always at least 30 cm higher than the pipes placed on the top of rack. In addition, the tubes must always follow a path down, and never, up This is let to facilitate the loading of the liquid and to create a smooth flow.

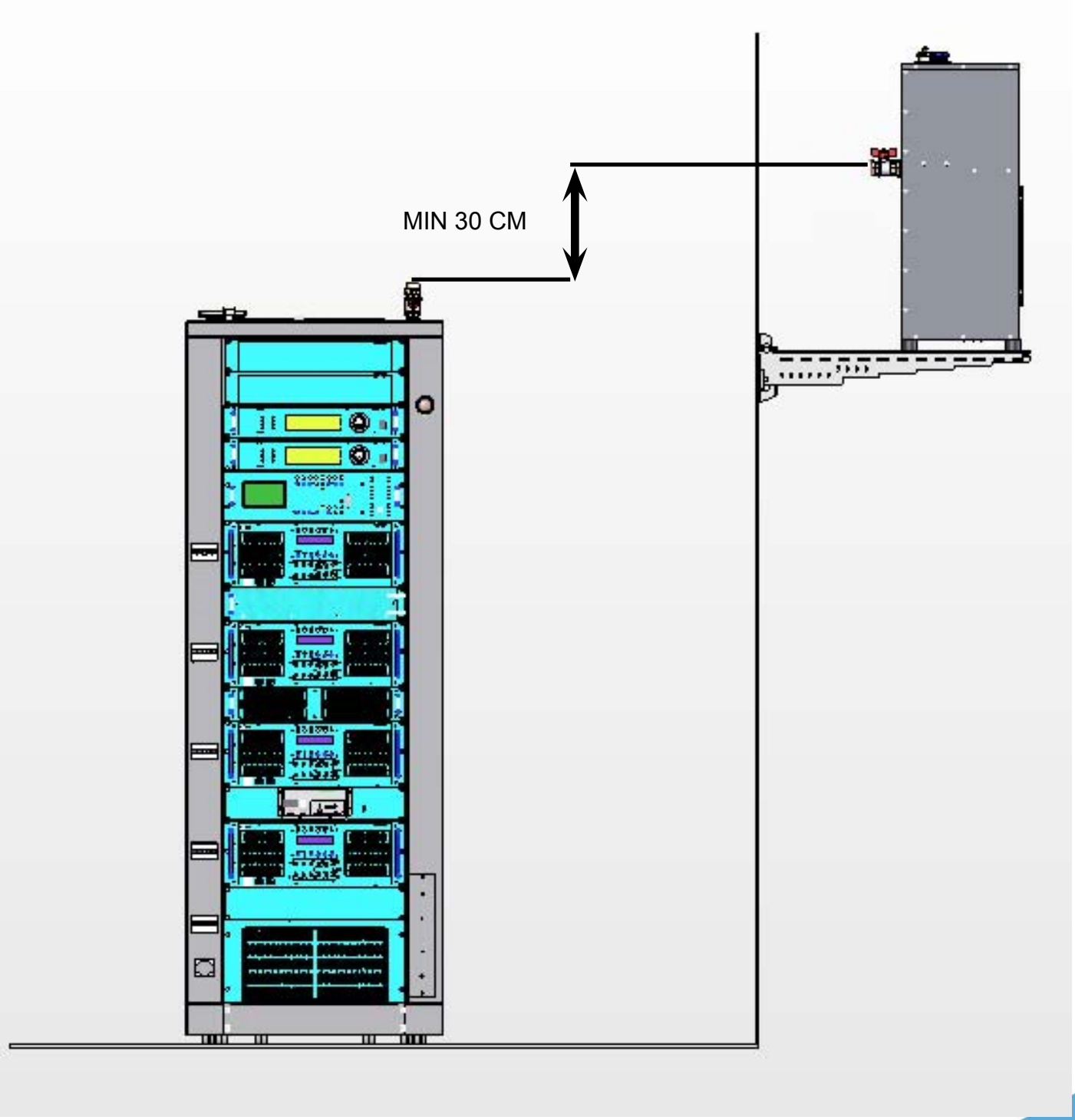

After mounting the radiator to connect pipes from the outdoor unit for cooling liquid and remember to put the gasket provided on the transmitter.

Photos with gasket mounted

For the connection of the tubes respect the blue and red, on the outdoor unit are marked with colored sheath for the identification.

Make sure that the tubes that leave from the outdoor unit, proceed up the transmitter always down to facilitate the loading of the liquid. It may be recommended to mount the cable tray.
On the transmitter always observe the color red and blue.

Once connected to the tubes, connect the two power cables from the outdoor unit to the top of the transmitter, you can not reverse because they are both male-female. The two wires are interchangeable as they are pin-to-pin. These cables are used to bring power to the radiator fan and the signals of the level of liquid in the tank.
Photos of the connection of external unit.

Photo of the cable connection on the transmitter.

Be sure to open the taps and removing the cap of the vent valve of the outdoor unit.
Fill the liquid tank of external unit.

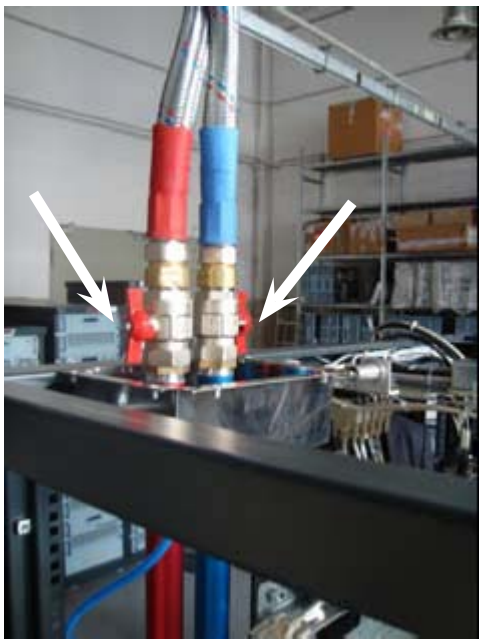

On the cooling unit is a placed level indicator, when there is no liquid, the red float, it will be on a low level.

When the red float will be red on an high level, it means the tank is full.

Open, on the top of the machine, the cover in order to access to the input terminal block and connect the power supply (make sure it's the same with which the machine has been created, threephase 380 or threephase 220, 50 or 60 Hz, otherwise it could seriously damage).

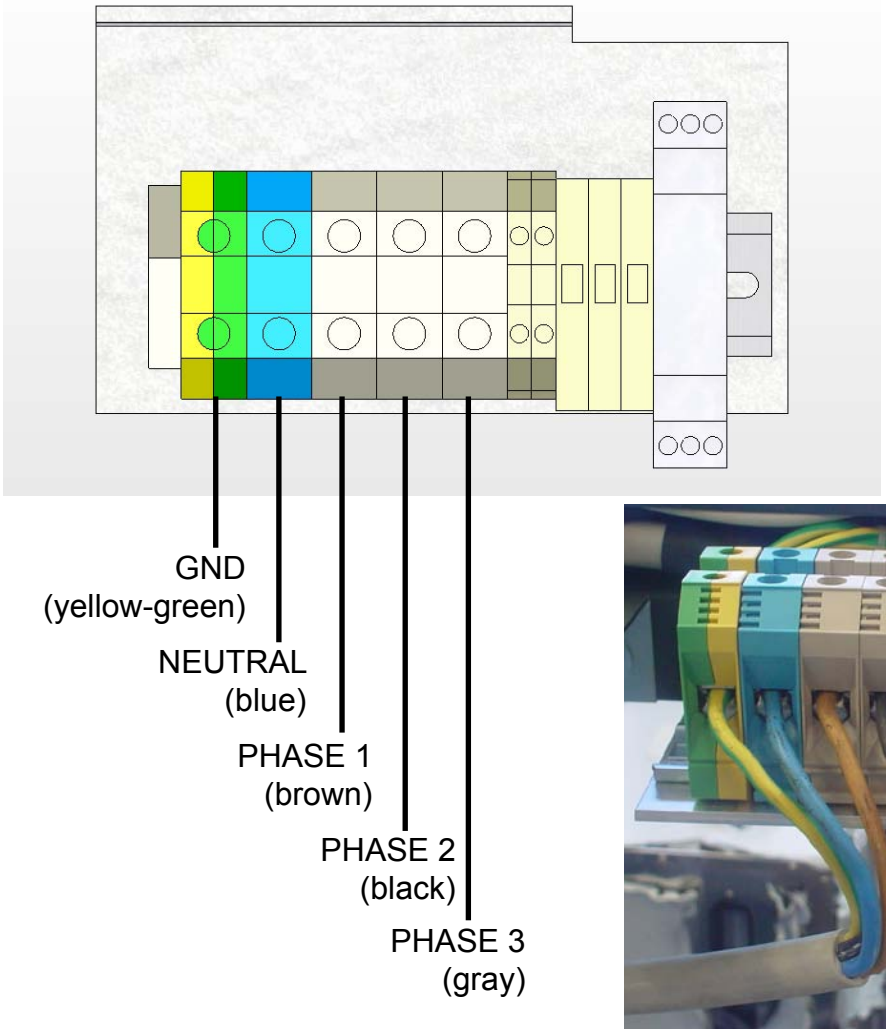

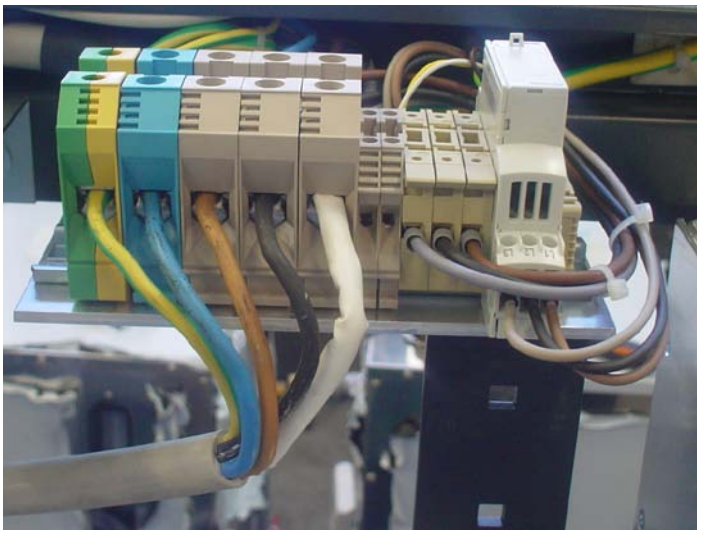

CAUTION: The connection of the machine to the electric alimentation is performed fixing to a 5 poles cable with bare terminals to a terminal block. Making sure without any possibility of error that the cable is not under tension while working on it.
Always on the top, on the plate connectors, put the VDE bridge or the UPS (opz.) and turn it on, otherwise the control logic will not work.

Once connected the electric alimentation, turn on the automatic services (BRAKER SERVICES) to power the machine.
Check the menu “cooling” of the CCU, the “Mains”, which should be “OK”, otherwise if there is “Alr” means that the RST phases are not in the correct order, to solve the problem simply invert two phases.
At this point we need to bleed the pumps, is necessary to remove the air from the circuit of the liquid, to do this pull the carriage pumps, from the base of rak.

Loosen the bolt located above the two pumps, placing the paper under in order to absorb any liquid outputs (VERY IMPORTANT, DO NOT REMOVE THE BOLT COMPLETELY, BUT ONLY LOOSENED, BECAUSE THE LIQUID, COULD DAMAGE THE MACHINE LOCATED ABOVE THE PUMP),done this it will go out the whole residual air of the circuit.

At this point, turn on the pumps: go on and contactors PUMP 1 and PUMP 2 positioned on the electromechanical section, and move the small lever on them to close the contact by pushing alternately, to run well pumps. Try for about a minute and if the flow is not "ok" pause and repeat the procedure loosening the bolt located on the pump and let out air again.

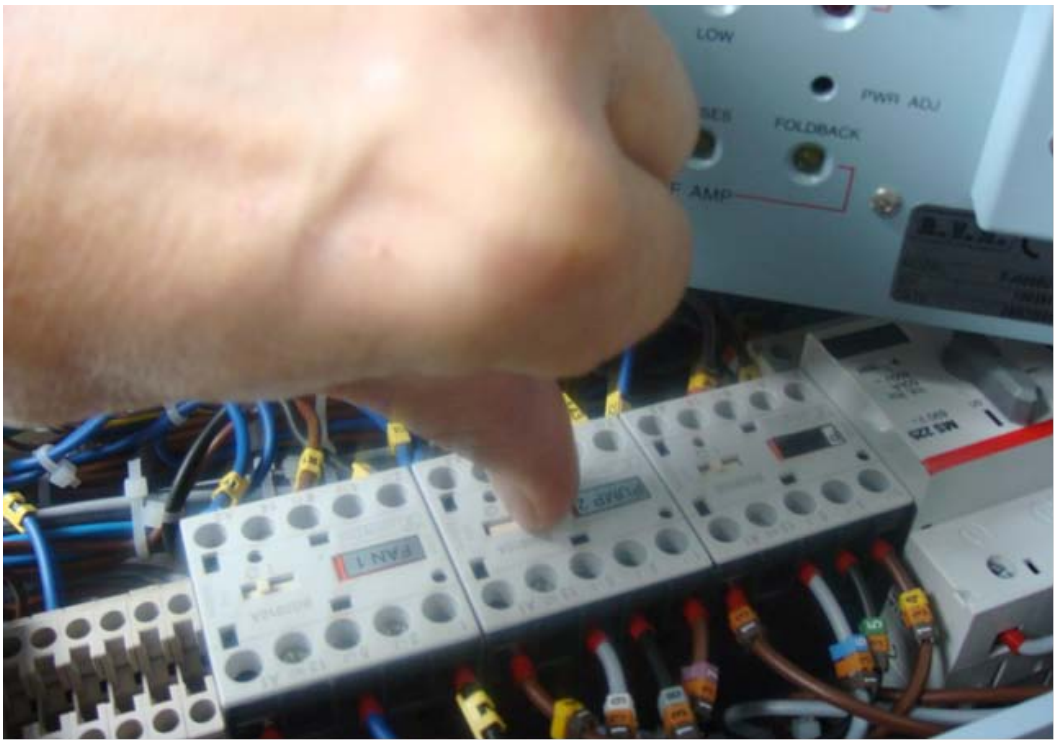

THIS OPERATION HAS TO BE REPEAT MINIMUM 4 -5 TIMES, TO DO THIS HAVE A GOOD FLOW OF LIQUID, IN THE MEANTIME YOU SHOULD ALWAYS MAKE SURE THAT THE TANK IS ALWAYS FULL, OTHERWISE YOU MUST ADD THE LIQUID SUPPLIED.
ONCE THE CIRCUIT IS LOADED CORRECTLY, YOU WILL SEE COOLING IN THE MENU, THE FLOW WILL BE GIVE YOU “OK” AND THE TWO LEVELS OF THE TANK WILL BE “OK”.

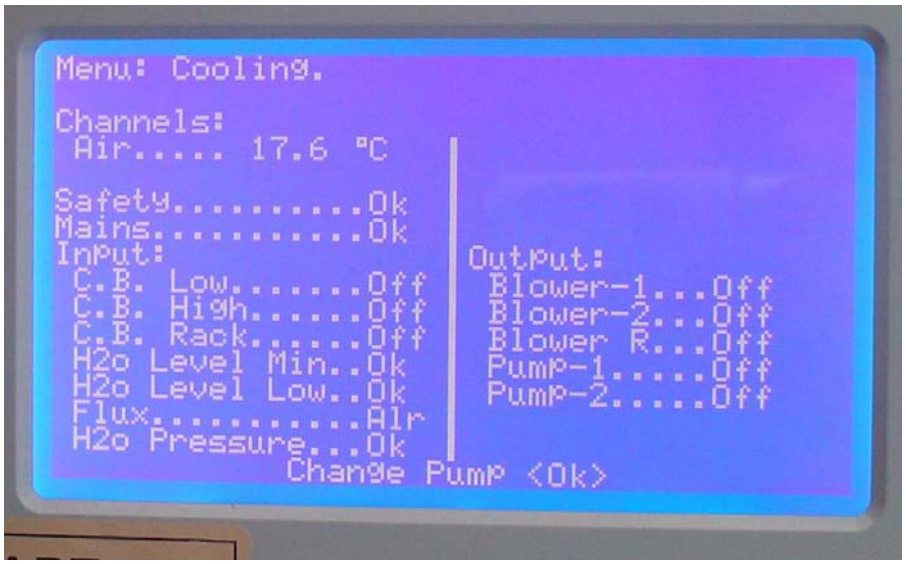

Once loaded well liquid circuit turn left for 30/40 minutes without power, to remove any air bubbles and constantly check the fluid level in the tank of the radiator and add if necessary.
Remember to close the cap of the vent valve external unit.
Connect the antenna cable.

The coolant can be supplied with the machine:

• AGIP ECO PERMANENT

The following are the technical characteristics of liquid.

11.1.1 Datasheet coolant

PRODUCT DATA SHEET

AGIP ECO PERMANENT

AGIP ECO PERMANENT is a biodegradable, Nitrite-Amine-Phosphate free product, easy-use for direct application, i.e. without dilution with water, as a coolant in the radiator systems of all types of vehicles, including heavy trucks. To obtain the full advantages of the high performance of this product, it is advisable not to mix it with other types of antifreeze.

CHARACTERISTICS (TYPICAL FIGURES)

AGIP ECO PERMANENT

Boiling point	°C	108
Freezing point	°C	-40
Colour	-	turquoise
Mass density at 15°C	kg/l	1,078

PROPERTIES AND PERFORMANCE

- AGIP ECO PERMANENT has a very low freezing point, which means that it can be used in all types of climate, all the year round.
- It is a long-life fluid which remains stable during storage as well as in use. It can therefore remain in service for long periods without having to be changed.
- It is not acidic, and so does not damage metals, even those most readily affected, such as aluminium, copper and soldering alloys.
- Its considerable alkalinity reduces any tendency towards corrosion, even after long periods of service.
- Its special anti-rust properties prevent damage to any ferrous metals with which it comes in contact.
- The special formulation prevents scale formation in cooling system components, even at high circulation velocities.
- Antifoaming properties also contribute to good heat exchange between the fluid and cooling system components, even at high circulation velocities.
- It does not cause swelling in rubber components of cooling systems.
- It has a high boiling point which ensures continued performance even under severe service conditions.
- Its inherent anti-cavitation properties, either in the pump or in the cylinder block, make it particularly suitable for applications where cavitation is likely to be a problem, e.g. in high-power engines, in cooling systems with high circulation velocities, or in diesels where vibration can cause problems.

SPECIFICATIONS

AGIP ECO PERMANENT meets the requirements of the following specification and tests:

- ASTM D 3306, general performances
- ASTM D 2570, simulated service corrosion test
- ASTM D 4340, aluminium corrosion under heat-rejecting conditions
- BMW 291-A, sludges and corrosion test
- CUNA 956-10, rubber compatibilità
- Maserati

Eni S.p.A.
Divisione Refining & Marketing
Via Laurentina 449, 00142 Roma
Tel. centralino +39 06 5988.1
www.eni.it

11.2 First start in power

After loading the circuit of the liquid and the air removed, checked that everything is OK in the menu Cooling and connected the antenna you can go on power.
Putting exchange exciter in manual (press the corresponding button on the front panel of the CCU, thus turning on the LED MANUAL) and make sure the two ptx are zero power, and set the correct frequency.Set Tx ON, check in the menu Cooling if the pump is turned on and the indication Flux it's OK.

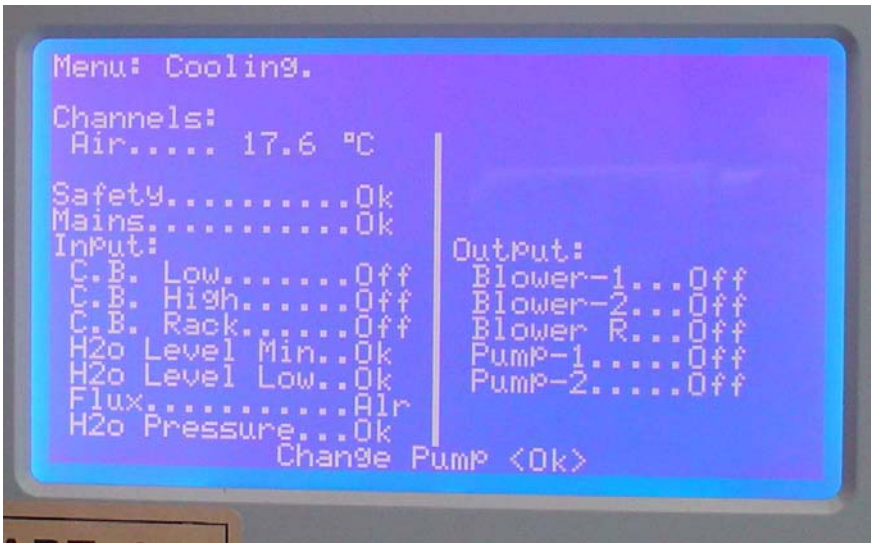

Go in the settings menù and set the power to the desred value, ex. 20Kw.

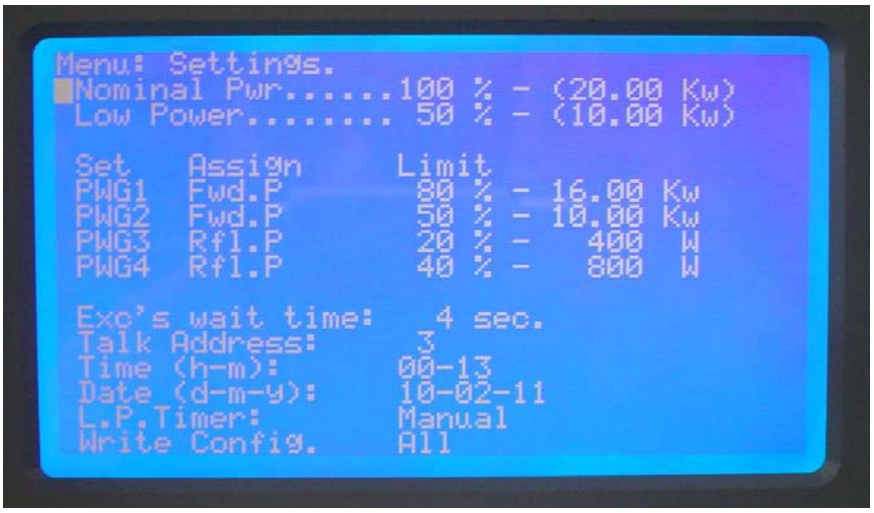

Verify that the 5 Kw modules are ON and that the internal power supplies generate a VPA voltage of 20 volts (RF menu Units 01-02)

Then go to the Service menu, get power for exciter 1 to about 10-12 watts of excitement and you will see that the modules will lead to a power of 750-800 W for about 15-20 seconds, then will rise, the VPA voltage, from 20 volts to 50 volts, At this point you have unlocked the power supplies and if there are no problems of ROS or FOLDBACK, the modules of power will rise the power until they reach the power set in the Settings menu over 2 / 3 watts to keep the saturation of amplifiers foldback.

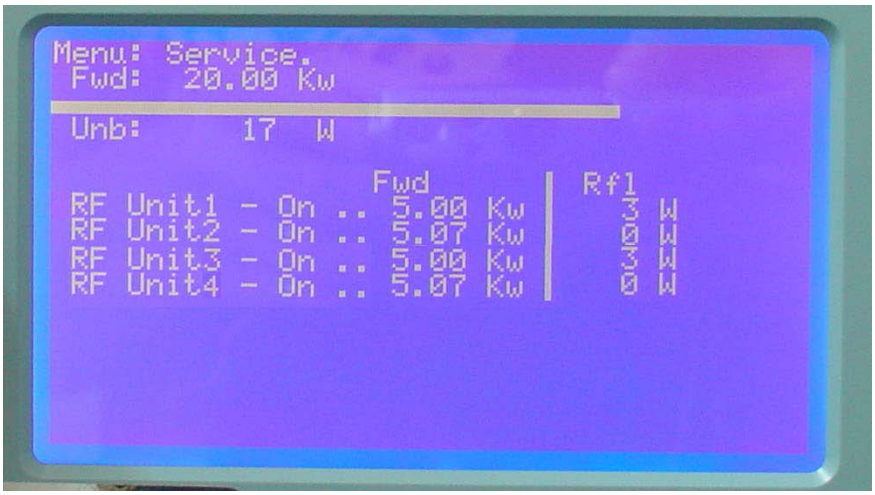

Remember to check that the parameters match the test card, attached to the machine. If there were significant differences it may be that the antenna or the filter cavity are incorrect.
Once the machine arrived at the power set and everything is ok, go on the trimmer on the front panel of the individual amplifiers (PWR ADJ located between the LEDs) and set it up as the single amplifier down of 50 watts, In this way, even in situations of power surges the machine will not go up ever
Set the exciter 2 at the same power of exciter 1, if present.
Set exciter exchange automatically, even if only one exciter.
Put the final in REMOTE if you want to operate the GSM Telemetry (if installed).
If there is too unbalanced power on the dummy load inside the machine, operate on Phase ADJ control on the front panel of the CCU (see Chap. 5.3 for explanation).
Check that the parameters of the machine remain stable.

11.3 Ordinary maintenance

Check once every two months that the liquid in the tank at the proper level.
Indications are displayed in the menu cooling.

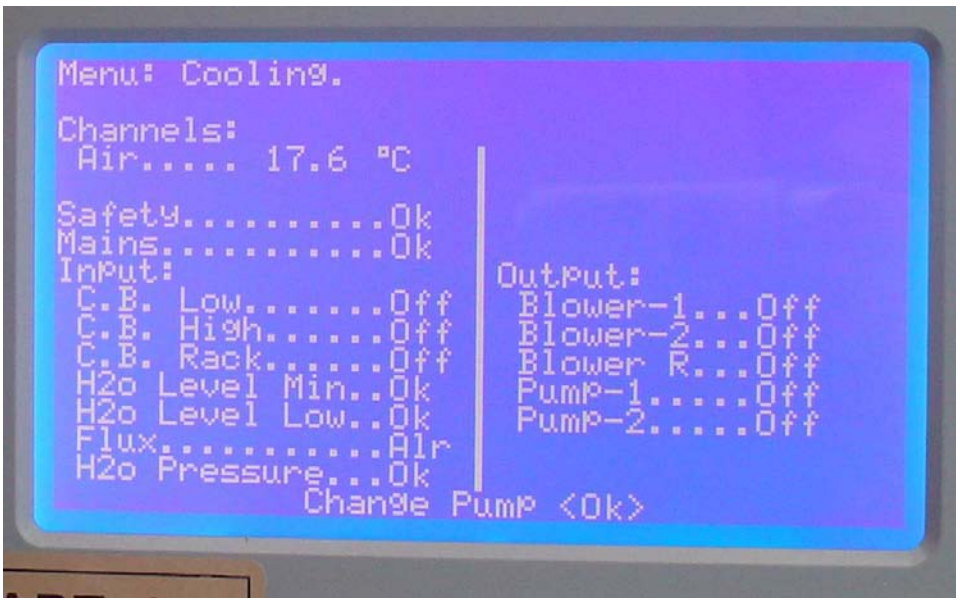

If you should have lowered the level, top up with the same type of liquid with which the machine has been supplied.

Revision History

Date	Version	Reason	Editor
23/04/2012	1.0	First version	Nicolini D.
26/07/2012	1.1	Updating PSL5060 board	Nicolini D.
18/09/2012	1.2	Adding information	Nicolini D.
14/05/2015	2.0	New vwesion of PJ5000U-KLC	Nicolini D.

© Copyright 2012
R.V.R. Elettronica S.p.A.
Via del Fonditore 2/2c – 40138 Bologna Italia
Telephone: +39 051 6010506
Fax: +39 051 6011104
E-mail: info@rvr.it
Web: www.rvr.it

All rights reserved
Printed and bound in Italy. No part of this manual may be reproduced, memorized or transmitted in any form or by any means, electronic or mechanic, including photocopying, recording or by any information storage and retrieval system, without written permission of the copyright owner.

R.V.R Elettronica S.p.A.
Via del Fonditore, 2 / 2c
Zona Industriale Roveri · 40138 Bologna · Italy
Phone: +39 051 6010506 · Fax: +39 051 6011104
e-mail: info@rvr.it · web: http://www-rvr-it

ISO 9001:2000 certified since 2000

Member of CISQ Federation
RINA
ISO 9001:2000
Certified Quality System

The RVR Logo, and others referenced RVR products and services are trademarks of RVR Elettronica S.p.A. in Italy, other countries or both. RVR ® 1998 all rights reserved.
All other trademarks, trade names or logos used are property of their respective owners.